Basic Electrical Installation Work

Sixth Edition

City & Guilds 2357 Diploma in Electrotechnical Technology

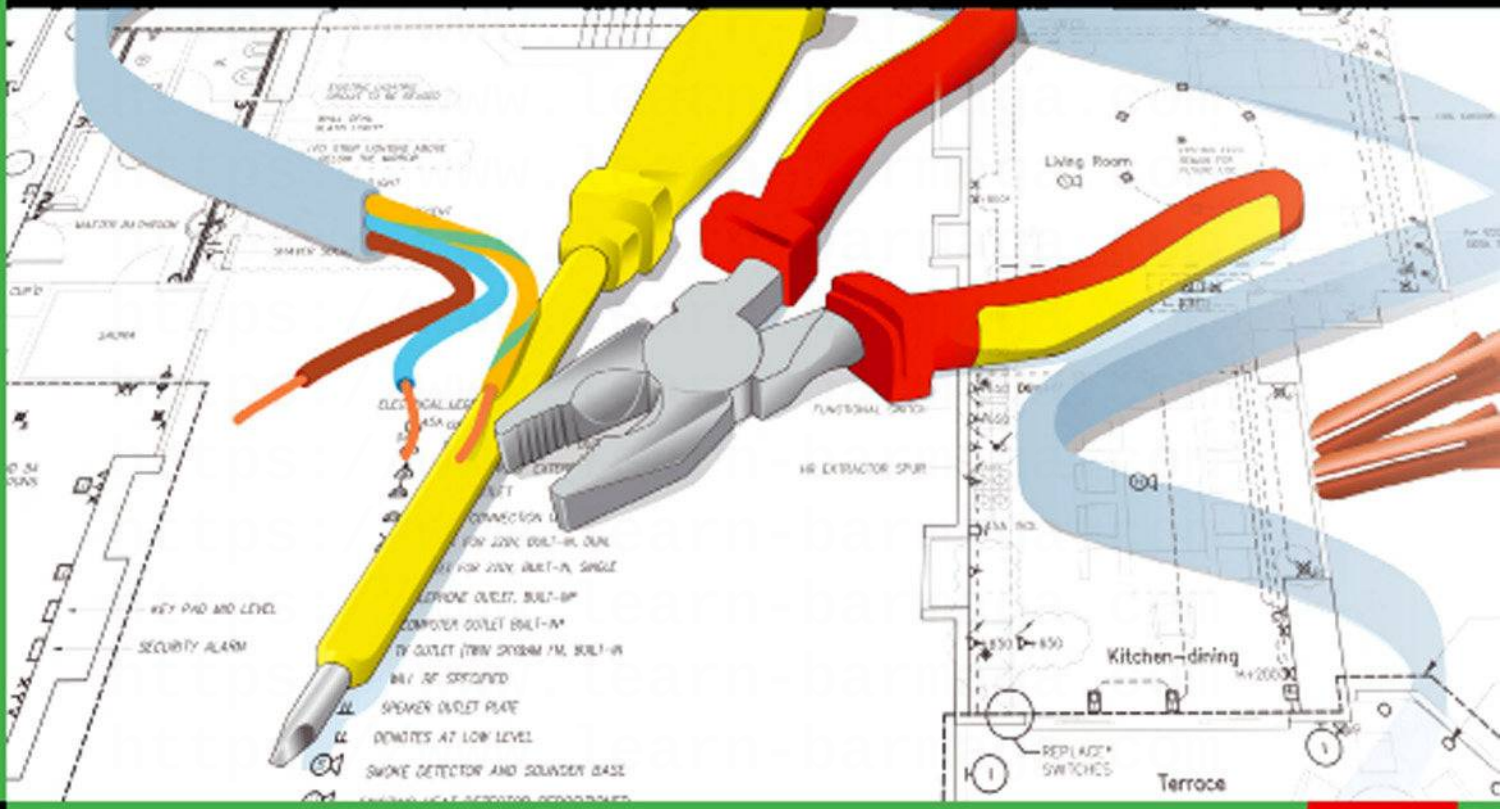

Trevor Linsley

Newnes

Basic Electrical Installation Work

To Joyce, Samantha and Victoria

Basic Electrical Installation Work

Sixth Edition

Trevor Linsley

Senior Lecturer • Blackpool and The Fylde College

ELSEVIER

AMSTERDAM • BOSTON • HEIDELBERG • LONDON • NEW YORK • OXFORD
PARIS • SAN DIEGO • SAN FRANCISCO • SINGAPORE • SYDNEY • TOKYO

Newnes is an imprint of Elsevier

Newnes

Newnes is an imprint of Elsevier
The Boulevard, Langford Lane, Kidlington, Oxford, OX5 1GB
225 Wyman Street, Waltham, MA 02451, USA

First published by Arnold 1998
Reprinted by Butterworth-Heinemann 2001, 2002, 2003 (twice), 2004 (twice)
Fourth edition 2005
Fifth edition 2008
Sixth edition 2011

Written to meet the requirements of the 2357 Level 3 Diploma in Electrotechnical Services (Electrical Maintenance) from City & Guilds.

British Library Cataloguing-in-Publication Data
A catalogue record for this book is available from the British Library

Library of Congress Cataloging-in-Publication Data
A catalog record for this book is available from the Library of Congress

ISBN 978-0-08-096628-1

For information on all Newnes publications
visit our website at www.newnespress.com

Typeset by MPS Limited, a Macmillan Company, Chennai, India
www.macmillansolutions.com

Printed and bound in Italy

Contents

This page intentionally left blank

https://www.learn-barmaga.com
https://www.learn-barmaga.com
https://www.learn-barmaga.com

Preface

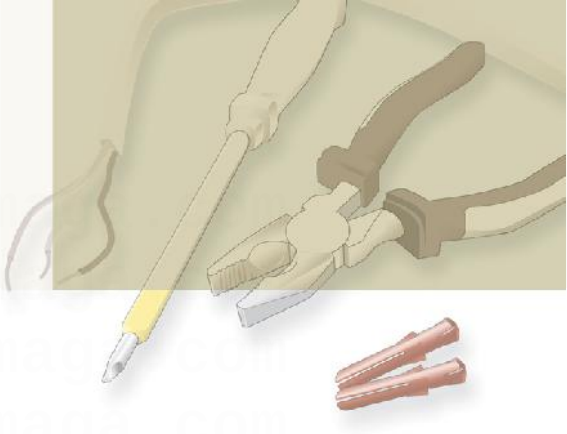

The 6th Edition of *Basic Electrical Installation Work* has been completely rewritten in nine Chapters to closely match the first nine knowledge or understanding units of the City and Guilds qualification.

This book of electrical installation theory and practice will be of value to the electrical trainee working towards:

- The City and Guilds 2357 Level 3 Diploma in Installing Electrotechnical Systems and Equipment (Buildings, Structures and the Environment).
- The City and Guilds 2357 Level 3 Diploma in Electrotechnical Services (Electrical Maintenance).
- The SCOTVEC and BTEC Electrical Utilisation Units at Levels I and II.
- Those taking Engineering and Modern Apprenticeship courses.

Basic Electrical Installation Work provides a sound basic knowledge of electrical theory and practice which other trades in the construction industry will find of value, particularly those involved in multi-skilling activities.

The book incorporates the requirements of the latest regulations, particularly:

- 17th Edition IEE Wiring Regulations.
- British Standards BS 7671: 2008.
- Part P of the Building Regulations, Electrical Safety in Dwellings 2006.
- Hazardous Waste Regulations 2005.
- Work at Height Regulations 2005.

Trevor Linsley
2011

This page intentionally left blank

https://www.learn-barmaga.com
https://www.learn-barmaga.com
https://www.learn-barmaga.com

Acknowledgements

I would like to acknowledge the assistance given by the following manufacturers and professional organizations in the preparation of this book:

- The Institution of Engineering and Technology for permission to reproduce regulations and tables from the 17th Edition IEE Regulations.
- The British Standards Institution for permission to reproduce material from BS 7671: 2008.
- Crabtree Electrical Industries for technical information and data.
- RS Components Limited for technical information and photographs.
- Stocksigns Limited for technical information and photographs.
- Wylex Electrical Components for technical information and photographs.

I would like to thank the many college lecturers who responded to the questionnaire from Elsevier the publishers, regarding the proposed new edition of this book. Their recommendations have been taken into account in producing this improved 6th Edition.

I would also like to thank the editorial and production staff at Elsevier the publishers for their enthusiasm and support. They were able to publish this 6th Edition within the very short timescale created by the publication of the new 2357 City and Guilds syllabus.

Finally, I would like to thank Joyce, Samantha and Victoria for their support and encouragement.

This page intentionally left blank

https://www.learn-barmaga.com
https://www.learn-barmaga.com
https://www.learn-barmaga.com

CHAPTER 1

Understanding health and safety legislation, practices and procedures

Unit 301 of the City and Guilds 2357 syllabus

Understanding Health and Safety legislation, practices and procedures (Installing and maintaining electrotechnical systems and equipment).

Online Material

This chapter has free associated content, including animations and instructional videos, to support your learning

When you see the logo, visit the website below to access this material:

www.elsevierdirect.com/companions/9780080966281

Safety regulations and laws

At the beginning of the nineteenth century children formed a large part of the working population of Great Britain. They started work early in their lives and they worked long hours for unscrupulous employers or masters.

The Health and Morals of Apprentices Act of 1802 was introduced by Robert Peel in an attempt at reducing apprentice working hours to 12 h per day and improving the conditions of their employment. The Factories Act of 1833 restricted the working week for children aged 13–18 years to 69 h in any working week.

With the introduction of the Factories Act of 1833, the first four full time Factory Inspectors were appointed. They were allowed to employ a small number of assistants and were given the responsibility of inspecting factories throughout England, Scotland, Ireland and Wales. This small overworked band of men were the forerunners of the modern HSE Inspectorate, enforcing the safety laws passed by Parliament. As the years progressed, new Acts of Parliament increased the powers of the Inspectorate and the growing strength

Basic Electrical Installation Work. 978-0-08-096628-1

of the trade unions meant that employers were increasingly being pressed to improve health, safety and welfare at work.

The most important recent piece of health and safety law was passed by Parliament in 1974 called the Health and Safety at Work Act. This Act gave added powers to the Inspectorate and is the basis of all modern statutory health and safety laws. This law not only increased the employer's liability for safety measures, but also put the responsibility for safety on employees too.

Health, safety and welfare legislation has increased the awareness of everyone to the risks involved in the workplace. All statutes within the Acts of Parliament must be obeyed and, therefore, we all need an understanding of the laws as they apply to our electrotechnical industry.

Statutory laws

Definition

Statutory Regulations have been passed by Parliament and have, therefore, become laws.

Acts of Parliament are made up of Statutes. **Statutory Regulations** have been passed by Parliament and have, therefore, become laws. Non-compliance with the laws of this land may lead to prosecution by the Courts and possible imprisonment for offenders.

We shall now look at some of the Statutory Regulations as they apply to the electrotechnical industry.

The Health and Safety at Work Act 1974

Many governments have passed laws aimed at improving safety at work, but the most important recent legislation has been the Health and Safety at Work Act 1974. The purpose of the Act is to provide the legal framework for stimulating and encouraging high standards of health and safety at work; the Act puts the responsibility for safety at work on both workers and managers.

The employer has a duty to care for the health and safety of employees (Section 2 of the Act). To do this he must ensure that:

- the working conditions and standard of hygiene are appropriate
- the plant, tools and equipment are properly maintained
- the necessary safety equipment – such as personal protective equipment (PPE), dust and fume extractors and machine guards – is available and properly used
- the workers are trained to use equipment and plant safely.

Employees have a duty to care for their own health and safety and that of others who may be affected by their actions (Section 7 of the Act). To do this they must:

- take reasonable care to avoid injury to themselves or others as a result of their work activity;
- co-operate with their employer, helping him or her to comply with the requirements of the Act;
- not interfere with or misuse anything provided to protect their health and safety.

Failure to comply with the Health and Safety at Work Act is a criminal offence and any infringement of the law can result in heavy fines, a prison sentence or both.

Enforcement

Laws and rules must be enforced if they are to be effective. The system of control under the Health and Safety at Work Act comes from the Health and Safety Executive (HSE) which is charged with enforcing the law. The HSE is divided into a number of specialist inspectorates or sections which operate from local offices throughout the United Kingdom. From the local offices the inspectors visit individual places of work.

The HSE inspectors have been given wide-ranging powers to assist them in the enforcement of the law. They can:

1. Enter premises unannounced and carry out investigations, take measurements or photographs.
2. Take statements from individuals.
3. Check the records and documents required by legislation.
4. Give information and advice to an employee or employer about safety in the workplace.
5. Demand the dismantling or destruction of any equipment, material or substance likely to cause immediate serious injury.
6. Issue an improvement notice which will require an employer to put right, within a specified period of time, a minor infringement of the legislation.
7. Issue a prohibition notice which will require an employer to stop immediately any activity likely to result in serious injury, and which will be enforced until the situation is corrected.
8. Prosecute all persons who fail to comply with their safety duties, including employers, employees, designers, manufacturers, suppliers and the self-employed.

Safety documentation

Under the Health and Safety at Work Act, the employer is responsible for ensuring that adequate instruction and information is given to employees to make them safety conscious. Part 1, Section 3 of the Act instructs all employers to prepare a written health and safety policy statement and to bring this to the notice of all employees. Figure 1.1 shows a typical Health and Safety Policy Statement of the type which will be available within your company. Your employer must let you know who your safety representatives are and the new Health and Safety poster shown in Fig. 1.2 has a blank section into which the names and contact information of your specific representatives can be added. This is a large laminated poster, 595 × 415 mm suitable for wall or notice board display.

All workplaces employing five or more people had to display the type of poster shown in Fig. 1.2 after 30 June 2000.

To promote adequate health and safety measures the employer must consult with the employees' safety representatives. In companies which employ more than 20 people this is normally undertaken by forming a safety committee which is made up of a safety officer and employee representatives, usually nominated by a trade union. The safety officer is usually employed full-time in that role. Small companies might employ a safety supervisor, who will have other duties within the company, or alternatively they could join a 'safety group'. The safety group then shares the cost of employing a safety adviser or safety officer, who visits each company in rotation. An employee who identifies

FLASH-BANG ELECTRICAL

Statement of Health and Safety at Work Policy in accordance with the Health and Safety at Work Act 1974

Company objective

The promotion of health and safety measures is a mutual objective for the Company and for its employees at all levels. It is the intention that all the Company's affairs will be conducted in a manner which will not cause risk to the health and safety of its members, employees or the general public. For this purpose it is the Company policy that the responsibility for health and safety at work will be divided between all the employees and the Company in the manner outlined below.

Company's responsibilities

The Company will, as a responsible employer, make every endeavour to meet its legal obligations under the Health and Safety at Work Act to ensure the health and safety of its employees and the general public. Particular attention will be paid to the provision of the following:

1 Plant equipment and systems of work that are safe.
2 Safe arrangements for the use, handling, storage and transport of articles, materials and substances.
3 Sufficient information, instruction, training and supervision to enable all employees to contribute positively to their own safety and health at work and to avoid hazards.
4 A safe place of work, and safe access to it.
5 A healthy working environment.
6 Adequate welfare services.

Note: Reference should be made to the appropriate safety etc. manuals.

Employees' responsibilities

Each employee is responsible for ensuring that the work which he/she undertakes is conducted in a manner which is safe to himself or herself, other members of the general public, and for obeying the advice and instructions on safety and health matters issued by his/her superior. If any employee considers that a hazard to health and safety exists it is his/her responsibility to report the matter to his/her supervisor or through his/her Union Representative or such other person as may be subsequently defined.

Management and Supervisors' responsibilities

Management and supervisors at all levels are expected to set an example in safe behaviour and maintain a constant and continuing interest in employee safety, in particular by:

1 acquiring the knowledge of health and safety regulations and codes of practice necessary to ensure the safety of employees in the workplace,
2 acquainting employees with these regulations on codes of practice and giving guidance on safety matters,
3 ensuring that employees act on instructions and advice given.

General Managers are ultimately responsible to the Company for the rectification or reporting of any safety hazard which is brought to their attention.

Joint consultations

Joint consultation on health and safety matters is important. The Company will agree with its staff, or their representatives, adequate arrangements for joint consultation on measures for promoting safety and health at work, and make and maintain satisfactory arrangements for the participation of their employees in the development and supervision of such measures. Trade Union representatives will initially be regarded as undertaking the role of Safety Representatives envisaged in the Health and Safety at Work Act. These representatives share a responsibility with management to ensure the health and safety of their members and are responsible for drawing the attention of management to any shortcomings in the Company's health and safety arrangements. The Company will in so far as is reasonably practicable provide representatives with facilities and training in order that they may carry out this task.

Review

A review, addition or modification of this statement may be made at any time and may be supplemented as appropriate by further statements relating to the work of particular departments and in accordance with any new regulations or codes of practice.

This policy statement will be brought to the attention of all employees.

Figure 1.1 Typical Health and Safety Policy Statement.

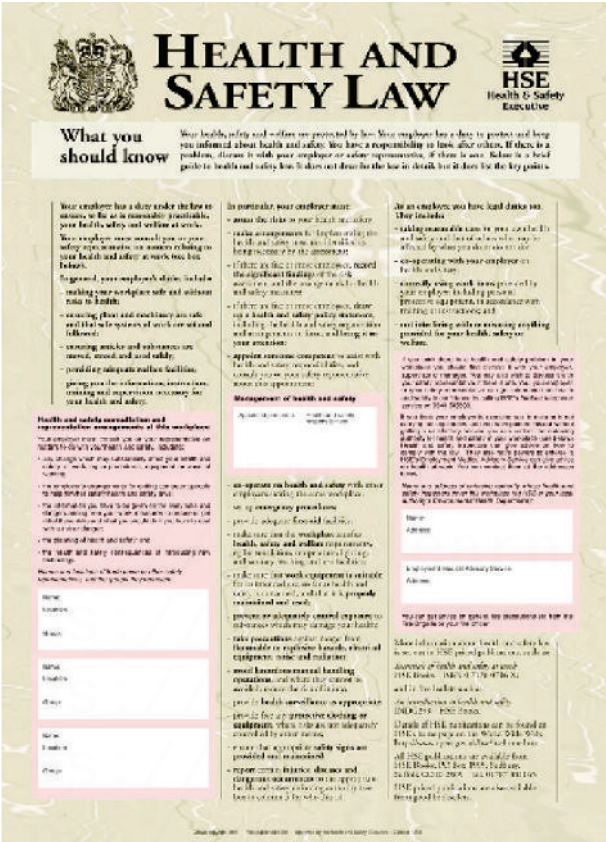
HEALTH AND SAFETY LAW

HSE Health & Safety Executive

What you should know

Figure 1.2 New health and safety law poster. *Source*: HSE © Crown copyright material is reproduced with the permission of the Controller of HMSO and Her Majesty's Stationery Office, Norwich.

a dangerous situation should initially report to his site safety representative. The safety representative should then bring the dangerous situation to the notice of the safety committee for action which will remove the danger. This may mean changing company policy or procedures or making modifications to equipment. All actions of the safety committee should be documented and recorded as evidence that the company takes seriously its health and safety policy.

The Electricity Safety, Quality and Continuity Regulations 2002 (formerly Electricity Supply Regulations 1989)

The Electricity Safety, Quality and Continuity Regulations 2002 are issued by the Department of Trade and Industry. They are statutory regulations which are enforceable by the laws of the land. They are designed to ensure a proper and safe supply of electrical energy up to the consumer's terminals.

These regulations impose requirements upon the regional electricity companies regarding the installation and use of electric lines and equipment. The regulations are administered by the Engineering Inspectorate of the Electricity Division of the Department of Energy and will not normally concern the electrical contractor

except that it is these regulations which lay down the earthing requirement of the electrical supply at the meter position.

The regional electricity companies must declare the supply voltage and maintain its value between prescribed limits or tolerances.

The government agreed on 1 January 1995 that the electricity supplies in the United Kingdom would be harmonized with those of the rest of Europe. Thus the voltages used previously in low-voltage supply systems of 415 V and 240 V have become 400 V for three-phase supplies and 230 V for single-phase supplies. The permitted tolerances to the nominal voltage have also been changed from ±6% to +10% and −6%. This gives a voltage range of 216–253 V for a nominal voltage of 230 V and 376–440 V for a nominal supply voltage of 400 V.

The next proposed change is for the tolerance levels to be adjusted to ±10% of the declared nominal voltage (IEE Regulation, Appendix 2:14).

The frequency is maintained at an average value of 50 Hz over 24 h so that electric clocks remain accurate.

Regulation 29 gives the area boards the power to refuse to connect a supply to an installation which in their opinion is not constructed, installed and protected to an appropriately high standard. This regulation would only be enforced if the installation did not meet the requirements of the IEE Regulations for Electrical Installations.

The Electricity at Work Regulations 1989 (EWR)

This legislation came into force in 1990 and replaced earlier regulations such as the Electricity (Factories Act) Special Regulations 1944. The regulations are made under the Health and Safety at Work Act 1974, and enforced by the Health and Safety Executive. The purpose of the regulations is to 'require precautions to be taken against the risk of death or personal injury from electricity in work activities'.

Section 4 of the EWR tells us that 'all systems must be constructed so as to prevent danger …, and be properly maintained … Every work activity shall be carried out in a manner which does not give rise to danger … In the case of work of an electrical nature, it is preferable that the conductors be made dead before work commences'.

The EWR do not tell us specifically how to carry out our work activities and ensure compliance, but if proceedings were brought against an individual for breaking the EWR, the only acceptable defence would be 'to prove that all reasonable steps were taken and all diligence exercised to avoid the offence' (Regulation 29).

An electrical contractor could reasonably be expected to have 'exercised all diligence' if the installation was wired according to the IEE Wiring Regulations (see below). However, electrical contractors must become more 'legally aware' following the conviction of an electrician for manslaughter at Maidstone Crown Court in 1989. The court accepted that an electrician had caused the death of another man as a result of his shoddy work in wiring up a central heating system. He received a 9-month suspended prison sentence. This case has set an important legal precedent, and in future any tradesman or professional who causes death through negligence or poor workmanship risks prosecution and possible imprisonment.

The Management of Health and Safety at Work Regulations 1999

The Health and Safety at Work Act 1974 places responsibilities on employers to have robust health and safety systems and procedures in the workplace. Directors and managers of any company who employ more than five employees can be held personally responsible for failures to control health and safety.

The Management of Health and Safety at Work Regulations 1999 tell us that employers must systematically examine the workplace, the work activity and the management of safety in the establishment through a process of 'risk assessments'. A record of all significant risk assessment findings must be kept in a safe place and be available to an HSE inspector if required. Information based on these findings must be communicated to relevant staff and if changes in work behaviour patterns are recommended in the interests of safety, then they must be put in place. The process of risk assessment is considered in detail later in this chapter.

Risks, which may require a formal assessment in the electrotechnical industry, might be:

- working at heights;
- using electrical power tools;
- falling objects;
- working in confined places;
- electrocution and personal injury;
- working with 'live' equipment;
- using hire equipment;
- manual handling – pushing – pulling – lifting;
- site conditions – falling objects – dust – weather – water – accidents and injuries.

And any other risks which are particular to a specific type of workplace or work activity.

The Control of Substances Hazardous to Health Regulations 2002 (COSHH)

The original COSHH Regulations were published in 1988 and came into force in October 1989. They were re-enacted in 1994 with modifications and improvements, and the latest modifications and additions came into force in 2002.

The COSHH Regulations control people's exposure to hazardous substances in the workplace. Regulation 6 requires employers to assess the risks to health from working with hazardous substances, to train employees in techniques which will reduce the risk and provide personal protective equipment (PPE) so that employees will not endanger themselves or others through exposure to hazardous substances. Employees should also know what cleaning, storage and disposal procedures are required and what emergency procedures to follow. The necessary information must be available to anyone using hazardous substances as well as to visiting HSE inspectors.

Hazardous substances include:

1. any substance which gives off fumes causing headaches or respiratory irritation;
2. man-made fibres which might cause skin or eye irritation (e.g. loft insulation);
3. acids causing skin burns and breathing irritation (e.g. car batteries, which contain dilute sulphuric acid);
4. solvents causing skin and respiratory irritation (strong solvents are used to cement together PVC conduit fittings and tube);
5. fumes and gases causing asphyxiation (burning PVC gives off toxic fumes);
6. cement and wood dust causing breathing problems and eye irritation;
7. exposure to asbestos – although the supply and use of the most hazardous asbestos material is now prohibited, huge amounts were installed between 1950 and 1980 in the construction industry and much of it is still in place today. In their latest amendments, the COSHH Regulations focus on giving advice and guidance to builders and contractors on the safe use and control of asbestos products. These can be found in Guidance Notes EH 71 or visit www.hse.uk/hiddenkiller.

Where PPE is provided by an employer, employees have a duty to use it to safeguard themselves.

Provision and Use of Work Equipment Regulations 1998

These regulations tidy up a number of existing requirements already in place under other regulations such as the Health and Safety at Work Act 1974, the Factories Act 1961 and the Offices, Shops and Railway Premises Act 1963.

The Provision and Use of Work Equipment Regulations 1998 place a general duty on employers to ensure minimum requirements of plant and equipment. If an employer has purchased good quality plant and equipment which is well maintained, there is little else to do. Some older equipment may require modifications to bring it in line with modern standards of dust extraction, fume extraction or noise, but no assessments are required by the regulations other than those generally required by the Management Regulations 1999 discussed previously.

The Construction (Health, Safety and Welfare) Regulations 1996

An electrical contractor is a part of the construction team, usually as a subcontractor, and therefore the regulations particularly aimed at the construction industry also influence the daily work procedures and environment of an electrician. The most important recent piece of legislation is the Construction Regulations.

The temporary nature of construction sites makes them one of the most dangerous places to work. These regulations are made under the Health and Safety at Work Act 1974 and are designed specifically to promote safety at work in the construction industry. Construction work is defined as any building or civil engineering work, including construction, assembly, alterations, conversions, repairs, upkeep, maintenance or dismantling of a structure.

The general provision sets out minimum standards to promote a good level of safety on site. Schedules specify the requirements for guardrails, working platforms, ladders, emergency procedures, lighting and welfare facilities. Welfare facilities set out minimum provisions for site accommodation: washing facilities, sanitary conveniences and protective clothing. There is now a duty for all those working on construction sites to wear head protection, and this includes electricians working on site as subcontractors.

Personal Protective Equipment (PPE) at Work Regulations 1998

PPE is defined as all equipment designed to be worn, or held, to protect against a risk to health and safety. This includes most types of protective clothing, and equipment such as eye, foot and head protection, safety harnesses, life jackets and high visibility clothing.

Definition

PPE is defined as all equipment designed to be worn, or held, to protect against a risk to health and safety.

Under the Health and Safety at Work Act, employers must provide free of charge any PPE and employees must make full and proper use of it. Safety signs such as those shown at Fig. 1.3 are useful reminders of the type of PPE to be used in a particular area. The vulnerable parts of the body which may need protection are the head, eyes, ears, lungs, torso, hands and feet and, additionally, protection from falls may need to be considered. Objects falling from a height present the major hazard against which head protection is provided. Other hazards include striking the head against projections and hair becoming entangled in machinery. Typical methods of protection include helmets, light duty scalp protectors called 'bump caps' and hairnets.

The eyes are very vulnerable to liquid splashes, flying particles and light emissions such as ultraviolet light, electric arcs and lasers. Types of eye protectors include

Figure 1.3 Safety signs showing type of PPE to be worn.

Safety first

PPE

Always wear or use the PPE (personal protective equipment) provided by your employer for your safety.

safety spectacles, safety goggles and face shields. Screen-based workstations are being used increasingly in industrial and commercial locations by all types of personnel. Working with VDUs (visual display units) can cause eye strain and fatigue and, therefore, this hazard is the subject of a separate section later in this chapter headed 'VDU operation hazards'.

Noise is accepted as a problem in most industries and surprisingly there has been very little control legislation. The Health and Safety Executive have published a 'Code of Practice' and 'Guidance Notes' HSG 56 for reducing the exposure of employed persons to noise. A continuous exposure limit of below 85 dB for an 8-hour working day is recommended by the Code.

Noise may be defined as any disagreeable or undesirable sound or sounds, generally of a random nature, which do not have clearly defined frequencies. The usual basis for measuring noise or sound level is the decibel scale. Whether noise of a particular level is harmful or not also depends on the length of exposure to it. This is the basis of the widely accepted limit of 85 dB of continuous exposure to noise for 8 hours per day.

A peak sound pressure of above 200 pascals or about 120 dB is considered unacceptable and 130 dB is the threshold of pain for humans. If a person has to shout to be understood at 2 m, the background noise is about 85 dB. If the distance is only 1 m, the noise level is about 90 dB. Continuous noise at work causes deafness, makes people irritable, affects concentration, causes fatigue and accident proneness and may mask sounds which need to be heard in order to work efficiently and safely.

It may be possible to engineer out some of the noise, for example by placing a generator in a separate sound-proofed building. Alternatively, it may be possible to provide job rotation, to rearrange work locations or provide acoustic refuges.

Where individuals must be subjected to some noise at work, it may be reduced by ear protectors. These may be disposable ear plugs, reusable ear plugs or ear muffs. The chosen ear protector must be suited to the user and suitable for the type of noise and individual personnel should be trained in its correct use.

Breathing reasonably clean air is the right of every individual, particularly at work. Some industrial processes produce dust which may present a potentially serious hazard. The lung disease asbestosis is caused by the inhalation of asbestos dust or particles and the coal dust disease pneumoconiosis, suffered by many coal miners, has made people aware of the dangers of breathing in contaminated air.

Some people may prove to be allergic to quite innocent products such as flour dust in the food industry or wood dust in the construction industry. The main effect of inhaling dust is a measurable impairment of lung function. This can be avoided by wearing an appropriate mask, respirator or breathing apparatus as recommended by the company's health and safety policy and indicated by local safety signs.

Safety first

Safety Signs

- Always follow the instructions given in the safety signs where you are working.
- It will help to keep you safe.

A worker's body may need protection against heat or cold, bad weather, chemical or metal splash, impact or penetration and contaminated dust. Alternatively, there may be a risk of the worker's own clothes causing contamination of the product, as in the food industry. Appropriate clothing will be recommended in the company's health and safety policy. Ordinary working clothes and clothing provided for food hygiene purposes are not included in the Personal Protective Equipment at Work Regulations.

Hands and feet may need protection from abrasion, temperature extremes, cuts and punctures, impact or skin infection. Gloves or gauntlets provide protection from most industrial processes, but should not be worn when operating machinery because they may become entangled in it. Care in selecting the appropriate protective device is required; for example, barrier creams provide only a limited protection against infection.

Try this

PPE

- Make a list of any PPE which you have used at work.
- What was this PPE protecting you from?

Boots or shoes with in-built toe caps can give protection against impact or falling objects and, when fitted with a mild steel sole plate, can also provide protection from sharp objects penetrating through the sole. Special slip resistant soles can also be provided for employees working in wet areas.

Whatever the hazard to health and safety at work, the employer must be able to demonstrate that he or she has carried out a risk analysis, made recommendations which will reduce that risk and communicated these recommendations to the workforce. Where there is a need for PPE to protect against personal injury and to create a safe working environment, the employer must provide that equipment and any necessary training which might be required and the employee must make full and proper use of such equipment and training.

Non-statutory regulations

Statutory laws and regulations are written in a legal framework, some don't actually tell us how to comply with the laws at an everyday level.

Non-statutory regulations and codes of practice interpret the statutory regulations telling us how we can comply with the law.

They have been written for every specific section of industry, commerce and situation, to enable everyone to comply with, or obey the written laws.

When the Electricity at Work Regulations (EWR) tell us to 'ensure that all systems are constructed so as to prevent danger' they do not tell us how to actually do this in a specific situation. However, the IEE Regulations tell us precisely how to carry out our electrotechnical work safely in order to meet the statutory requirements of the EWR. In Part 1 of the IEE Regulations, at 114, it states 'the Regulations are non-statutory. They may, however, be used in a court of law in evidence to claim compliance with a statutory requirement'. If your electrotechnical work meets the requirements of the IEE Regulations, you will also meet the requirements of EWR.

Over the years, non-statutory regulations and codes of practice have built upon previous good practice and responded to changes by bringing out new editions of the various regulations and codes of practice to meet the changing needs of industry and commerce.

We will now look at one non-statutory regulation, what is sometimes called 'the electrician's bible', the most important set of regulations for any one working in the electrotechnical industry, the BS 7671: 2008 Requirements for Electrical Installations, IEE Wiring Regulations 17th Edition.

Definition

Statutory laws and regulations are written in a legal framework.

Definition

Non-statutory regulations and codes of practice interpret the statutory regulations telling us how we can comply with the law.

The IEE Wiring Regulations 17th edition requirements for electrical installations to BS 7671: 2008

The Institution of Electrical Engineers Requirements for Electrical Installations (the IEE Regulations) are non-statutory regulations. They relate principally to the design, selection, erection, inspection and testing of electrical installations, whether permanent or temporary, in and about buildings generally and to agricultural and horticultural premises, construction sites and caravans and their sites. Paragraph 7 of the introduction to the EWR says: 'the IEE Wiring Regulations is a code of practice which is widely recognized and accepted in the United Kingdom and compliance with them is likely to achieve compliance with all relevant aspects of the Electricity at Work Regulations'. The IEE Wiring Regulations are the national standard in the United Kingdom and apply to installations operating at a voltage up to 1000 V a.c. They do not apply to electrical installations in mines and quarries, where special regulations apply because of the adverse conditions experienced there.

The current edition of the IEE Wiring Regulations is the 17th edition 2008. The main reason for incorporating the IEE Wiring Regulations into British Standard BS 7671: 2008 was to create harmonization with European Standards.

The IEE Regulations take account of the technical intent of the CENELEC European Standards, which in turn are based on the IEC International Standards.

The purpose in harmonizing British and European Standards is to help develop a single European market economy so that there are no trade barriers to electrical goods and services across the European Economic Area.

To assist electricians in their understanding of the regulations a number of guidance notes have been published. The guidance notes which I will frequently make reference to in this book are those contained in the *On Site Guide.* Eight other guidance notes booklets are also currently available. These are:

- *Selection and Erection*
- *Isolation and Switching*
- *Inspection and Testing*
- *Protection against Fire*
- *Protection against Electric Shock*
- *Protection against Overcurrent*
- *Special Locations*
- *Earthing and Bonding*

These guidance notes are intended to be read in conjunction with the regulations.

The IEE Wiring Regulations are the electrician's bible and provide the authoritative framework of information for anyone working in the electrotechnical industry.

Health and safety responsibilities

We have now looked at statutory and non-statutory regulations which influence working conditions in the electrotechnical industry today. So, who has *responsibility* for these workplace Health and Safety Regulations?

In 1970, a Royal Commission was set up to look at the health and safety of employees at work. The findings concluded that the main cause of accidents at work was apathy on the part of *both* employers and employees.

The Health and Safety at Work Act 1974 was passed as a result of recommendations made by the Royal Commission and, therefore, the Act puts legal responsibility for safety at work on *both* the employer and employee.

In general terms, the employer must put adequate health and safety systems in place at work and the employee must use all safety systems and procedures responsibly.

In specific terms the employer must:

- provide a Health and Safety Policy Statement if there are five or more employees such as that shown in Fig. 1.1;
- display a current employers liability insurance certificate as required by the Employers Liability (Compulsory Insurance) Act 1969;
- report certain injuries, diseases and dangerous occurrences to the enforcing authority (HSE area office – see Appendix B for address);
- provide adequate first aid facilities (see Tables 1.1 and 1.2);
- provide PPE;
- provide information, training and supervision to ensure staffs' health and safety;
- provide adequate welfare facilities;
- put in place adequate precautions against fire, provide a means of escape and means of fighting fire;
- ensure plant and machinery are safe and that safe systems of operation are in place;

Key fact

IEE Regulations

- They are the UK National Standard for all electrical work.
- They are the 'electrician's bible'.
- Comply with the IEE Regulations and you also comply with Statutory Regulations (IEE Regulation 114).

Table 1.1 Suggested numbers of first aid personnel

Category of risk	Numbers employed at any location	Suggested number of first aid personnel
Lower risk		
e.g. shops and offices, libraries	Fewer than 50 50–100 More than 100	At least one appointed person At least one first aider One additional first aider for every 100 employed
Medium risk		
e.g. light engineering and assembly work, food processing, warehousing	Fewer than 20 20–100 More than 100	At least one appointed person At least one first aider for every 50 employed (or part thereof) One additional first aider for every 100 employed
Higher risk		
e.g. most construction, slaughterhouses, chemical manufacture, extensive work with dangerous machinery or sharp instruments	Fewer than five 5–50 More than 50	At least one appointed person At least one first aider One additional first aider for every 50 employed

Table 1.2 Contents of first aid boxes

Item	Number of employees				
	1–5	6–10	11–50	51–100	101–150
Guidance card on general first aid	1	1	1	1	1
Individually wrapped sterile adhesive dressings	10	20	40	40	40
Sterile eye pads, with attachment (Standard Dressing No. 16 BPC)	1	2	4	6	8
Triangular bandages	1	2	4	6	8
Sterile covering for serious wounds (where applicable)	1	2	4	6	8
Safety pins	6	6	12	12	12
Medium sized sterile unmedicated dressings (Standard Dressings No. 9 and No. 14 and the Ambulance Dressing No. 1)	3	6	8	10	12
Large sterile unmedicated dressings (Standard Dressings No. 9 and No. 14 and the Ambulance Dressing No. 1)	1	2	4	6	10
Extra large sterile unmedicated dressings (Ambulance Dressing No. 3)	1	2	4	6	8
Where tap water is not available, sterile water or sterile normal saline in disposable containers (each holding a minimum of 300 ml) must be kept near the first aid box. The following minimum quantities should be kept:					
Number of employees	1–10	11–50	51–100	101–150	
Quantity of sterile water	1 × 300 ml	3 × 300 ml	6 × 300 ml	6 × 300 ml	

- ensure articles and substances are moved, stored and used safely;
- make the workplace safe and without risk to health by keeping dust, fumes and noise under control.

In specific terms the employee must:

- take reasonable care of his/her own health and safety and that of others who may be affected by what they do;
- co-operate with his/her employer on health and safety issues by not interfering or misusing anything provided for health, safety and welfare in the working environment;
- report any health and safety problem in the workplace to, in the first place, a supervisor, manager or employer.

Employment – rights and responsibilities

As a trainee in the electrotechnical industry you will be employed by a member company and receive a weekly or monthly wage, which will be dependent upon your age and grade as agreed by the appropriate trade union, probably UNITE.

We have seen in the beginning of this chapter that there are many rules and regulations which your employer must comply with in order to make your

workplace healthy and safe. There are also responsibilities that apply to you, as an employee (or worker) in the electrotechnical industry, in order to assist your employer to obey the law.

As an employee you must:

- obey all lawful and reasonable requests;
- behave in a sensible and responsible way at work;
- work with care and reasonable skill.

Your employer must:

- take care for your safety;
- not ask you to do anything unlawful or unreasonable;
- pay agreed wages;
- not change your contract of employment without your agreement.

Most of the other things that can be expected of you are things like honesty, punctuality, reliability and hard work. Really, just common sense things like politeness will help you to get on at work.

If you have problems relating to your employment rights you should talk it through with your supervisor or trade union representative at work.

Wages and tax

When you start work you will be paid either weekly or monthly. It is quite common to work a week in hand if you are paid weekly, which means that you will be paid for the first week's work at the end of the second week. When you leave that employment, if you have worked a week in hand, you will have a week's wage to come. Money that you have worked for belongs to you and cannot be kept by your employer if you leave without giving notice.

Every employee is entitled to a payslip along with their wages, which should show how much you have earned (gross), how much has been taken off for tax and national insurance and what your take home pay (net) is.

If you are not given a payslip, ask for one, it is your legal right and you may be required to show payslips as proof of income. Always keep your payslips in a safe place.

We all pay tax on the money we earn (income tax). The government uses tax to pay for services such as health, education, defence, social security and pensions.

We are all allowed to earn a small amount of money tax free each year and this is called the personal allowance. The personal allowance for the tax year in which I am writing this book (2010/2011) is £6475. So every pound that we earn above £6475 is taxed. The tax year starts on 6 April each year and finishes on 5 April the following year. Your personal tax code enables the personal allowance to be spread out throughout the year and you pay tax on your wages on a system called PAYE, pay as you earn.

At the end of the tax year your employers will give you a form called a P60 which shows your tax code, how much you have earned and how much tax you have paid during a particular tax year. It is important to keep your P60 somewhere safe along with your payslips. If at some time you want to buy a house a building society will want proof of your earnings, which these documents show.

When leaving a particular employment you must obtain from your employer a form P45. On starting new employment this form will be required by your new employer and will ensure that you do not initially pay too much tax.

Working hours

Employees cannot be forced to work more than 48 h each week on average, and 40 h for 16–18 year old trainees. Trainees must also have 12 h uninterrupted rest from work each day. Older workers, required to work for more than 6 h continuously, are entitled to a 20-min rest break, to be taken within the 6 h, and must have 11 h uninterrupted rest from work each day. If you think you are not getting the correct number of breaks, talk to your supervisor or trade union representative.

Sickness

If you are sick and unable to go to work, you should contact your employer or supervisor as soon as you can on the first day of illness. When you go back to work, if you have been sick for up to 7 days, you will have to fill in a self-certification form. After 7 days you will need a medical certificate from your doctor and you must send it to work as soon as you can. If you are sick for 4 days or more your employer must pay you statutory sick pay (SSP), which can be paid for up to 28 weeks. If you are still sick after 28 weeks you can claim incapacity benefit. To claim this you will need a form from your employer or social security office. If you have a sickness problem, talk to your supervisor or someone at work who you trust, or telephone the local social security office.

Accidents

It is the employer's duty to protect the health and safety and welfare of its employees, so if you do have an accident at work, however small, inform your supervisor, safety officer or first aid person. Make sure that the details are recorded in the accident/first aid book. Failure to do so may affect compensation if the accident proves to be more serious than you first thought.

Always be careful, use common sense and follow instructions. If in doubt, ask someone. A simple accident might prevent you playing your favourite sport for a considerable period of time.

Holidays

Most employees are entitled to at least 4 weeks paid holiday each year. Your entitlement to paid holidays builds up each month, so a month after you start work you are entitled to one-twelfth of the total holiday entitlement for the year. After 2 months it becomes two-twelfths and so on. Ask your supervisor or HR/Payroll contact to explain your holiday entitlement to you.

Problems at work

It is not unusual to find it hard to fit in when you start a new job. Give it a chance, give it time and things are likely to settle down. As a new person you might seem to get all the rotten jobs, but sometimes, being new, these are the only jobs that you can do for now.

In some companies there can be a culture of 'teasing', which may be OK, if everyone is treated the same, but not so good if you are always the one being

teased. If this happens, see if it stops after a while, if not, talk to someone about it. Don't give up your job without trying to get the problem sorted out.

If you feel that you are being discriminated against or harassed because of your race, sex or disability, then talk to your supervisor, trainer or someone you trust at work. There are laws about discrimination that are discussed in Advanced Electrical Installation Work.

You can join a trade union when you are 16 years of age or over. Trade unions work toward fair deals for their members. If you join a trade union there will be subscriptions (subs) to pay. These are often reduced or suspended during the training period. As a member of a trade union you can get advice and support from them. If there is a problem of any kind at work, you can ask for union's support. However, you cannot get this support unless you are a member.

Resignation/dismissal

Most employers like to have your resignation or 'Notice' in writing. Your Contract of Employment will tell you how much notice is expected. The minimum notice you should give is 1 week if you have been employed for 1 month or more by that employer. However, if your Contract states a longer period, then that is what is expected.

If you have worked for 1 month or more, but less than 2 years, you are entitled to 1 week's notice. If you have worked for 2 years you are entitled to 2 week's notice and a further week's notice for every additional continuous year of employment (with the same employer) up to 12 weeks for 12 years service.

If you are dismissed or 'sacked' you are entitled to the same periods of notice. However, if you do something very serious, like stealing or hitting someone, your employer can dismiss you without notice.

You can also be dismissed if you are often late or your behaviour is inappropriate to the type of work being done. You should have verbal or written warnings before you are dismissed.

If there are 20 or more employees at your place of employment then there should be a disciplinary procedure written down, which must be followed. If you do get a warning, then you might like to see this as a second chance to start again.

If you have been working for the same employer for 1 year or more, you can complain to an Employment Tribunal if you think you have been unfairly dismissed. If you haven't worked for the same employer for this length of time, then you should talk to your training officer or trade union.

I do not want to finish this section in a negative way, talking about problems at work, so let me finally say that each year over 8000 young people are in apprenticeships in the electrical contracting industry and very few of them have problems. The small problems that may arise, because moving into full-time work is very different to school, can usually be resolved by your training officer or supervisor. Most of the trainees go on to qualify as craftsmen and enjoy a well-paid and fulfilling career in the electrotechnical industry.

Safety signs

The rules and regulations of the working environment are communicated to employees by written instructions, signs and symbols. All signs in the working environment are intended to inform. They should give warning of possible

Figure 1.4 Text only safety signs do not comply.

Figure 1.5 Prohibition signs. These are *must not* do signs.

dangers and must be obeyed. At first there were many different safety signs, but British Standard BS 5499 Part 1 and the Health and Safety (Signs and Signals) Regulations 1996 have introduced a standard system which gives health and safety information with the minimum use of words. The purpose of the regulations is to establish an internationally understood system of safety signs and colours which draw attention to equipment and situations that do, or could, affect health and safety. Text-only safety signs became illegal from 24 December 1998. From that date, all safety signs have had to contain a pictogram or symbol such as those shown in Fig. 1.4. Signs fall into four categories: prohibited activities; warnings; mandatory instructions and safe conditions.

Prohibition signs

These are *must not do* signs. These are circular white signs with a red border and red cross-bar, and are given in Fig. 1.5. They indicate an activity *which must not* be done.

Warning signs

These give safety information. These are triangular yellow signs with a black border and symbol, and are given in Fig. 1.6. They *give warning* of a hazard or danger.

Mandatory signs

These are *must do* signs. These are circular blue signs with a white symbol, and are given in Fig. 1.7. They *give instructions* which must be obeyed.

Advisory or safe condition sign

These give safety information. These are square or rectangular green signs with a white symbol, and are given in Fig. 1.8. They *give information* about safety provision.

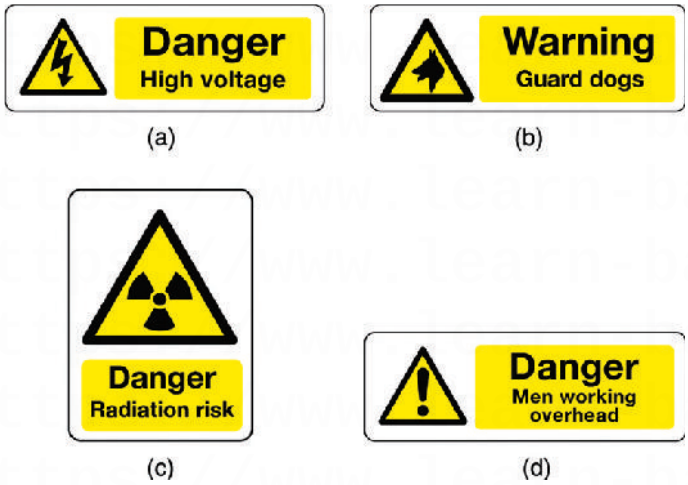

Figure 1.6 Warning signs. These give safety information.

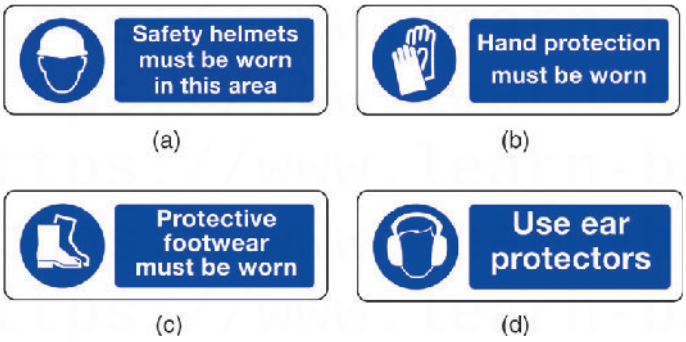

Figure 1.7 Mandatory signs. These are *must do* signs.

Figure 1.8 Advisory or safe condition signs. These also give safety information.

Accidents at work

Definition

An *accident* may be defined as an uncontrolled event causing injury or damage to an individual or property.

Despite new legislation, improved information, education and training, accidents at work do still happen. An accident may be defined as an uncontrolled event causing injury or damage to an individual or property. An accident can nearly always be avoided if correct procedures and methods of working are followed. Any accident which results in an absence from work for more than 3 days or causes a major injury or death, is notifiable to the HSE. There are more than 40,000 accidents reported to the HSE each year which occur as a result of some building-related activity. To avoid having an accident you should:

1. follow all safety procedures (e.g. fit safety signs when isolating supplies and screen off work areas from the general public);
2. not misuse or interfere with equipment provided for health and safety;
3. dress appropriately and use PPE when appropriate;
4. behave appropriately and with care;
5. avoid over-enthusiasm and foolishness;
6. stay alert and avoid fatigue;
7. not use alcohol or drugs at work;
8. work within your level of competence;
9. attend safety courses and read safety literature;
10. take a positive decision to act and work safely.

If you observe a hazardous situation at work, first make the hazard safe, using an appropriate method, or screen it off, but only if you can do so without putting yourself or others at risk, then report the situation to your safety representative or supervisor.

Fire control

Definition

Fire is a chemical reaction which will continue if fuel, oxygen and heat are present.

Fire is a chemical reaction which will continue if fuel, oxygen and heat are present. To eliminate a fire *one* of these components must be removed. This is often expressed by means of the fire triangle shown in Fig. 1.9; all three corners of the triangle must be present for a fire to burn.

Fuel

Fuel is found in the construction industry in many forms: petrol and paraffin for portable generators and heaters; bottled gas for heating and soldering. Most solvents are flammable. Rubbish also represents a source of fuel: off-cuts of wood, roofing felt, rags, empty solvent cans and discarded packaging will all provide fuel for a fire.

To eliminate fuel as a source of fire, all flammable liquids and gases should be stored correctly, usually in an outside locked store. The working environment should be kept clean by placing rags in a metal bin with a lid. Combustible waste material should be removed from the work site or burned outside under controlled conditions by a competent person.

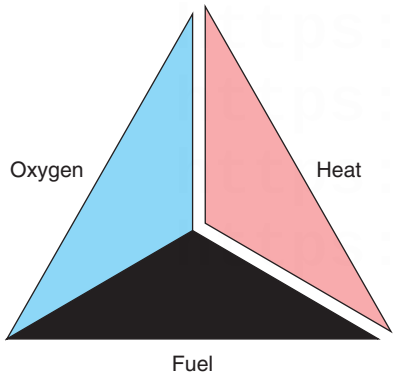

Figure 1.9 The fire triangle.

Oxygen

Oxygen is all around us in the air we breathe, but can be eliminated from a small fire by smothering with a fire blanket, sand or foam. Closing doors and windows,

but not locking them will limit the amount of oxygen available to a fire in a building and help to prevent it spreading.

Most substances will burn if they are at a high enough temperature and have a supply of oxygen. The minimum temperature at which a substance will burn is called the 'minimum ignition temperature' and for most materials this is considerably higher than the surrounding temperature. However, a danger does exist from portable heaters, blow torches and hot air guns which provide heat and can cause a fire by raising the temperature of materials placed in their path above the minimum ignition temperature. A safe distance must be maintained between heat sources and all flammable materials.

Safety first

Fire

If you discover a fire:

- raise the alarm;
- attack small fires with an extinguisher;
- BUT only if you can do so without risk to your own safety.

Heat

Heat can be removed from a fire by dousing with water, but water must not be used on burning liquids since the water will spread the liquid and the fire. Some fire extinguishers have a cooling action which removes heat from the fire.

Fires in industry damage property and materials, injure people and sometimes cause loss of life. Everyone should make an effort to prevent fires, but those which do break out should be extinguished as quickly as possible.

Type of fire extinguisher / Type of fire	(i) Water	(ii) Foam	(iii) Carbon dioxide gas	(iv) Dry powder	(v) Vapourizing foam
	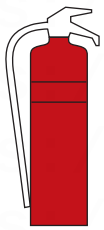 Signal red flash on red	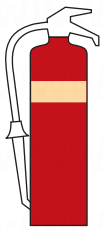 Pale cream flash on red	 Black flash on red	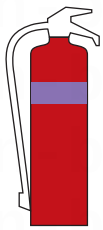 French blue flash on red	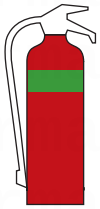 Emerald green flash on red
Class A Paper, wood and fabric	✓ Yes	✓ Yes	✗ No	✓ Yes	✓ Yes
Class B Flammable liquids	✗ No	✓ Yes	✓ Yes	✓ Yes	✓ Yes
Class C Flammable gases	✗ No	✗ No	✓ Yes	✓ Yes	✓ Yes
Electrical fires	✗ No	✗ No	✓ Yes	✓ Yes	✓ Yes
Motor vehicle protection	✗ No	✓ Yes	✗ No	✓ Yes	✓ Yes

Figure 1.10 Fire extinguishers and their applications (colour codes to BS EN3: 1996). The base colour of all fire extinguishers is red, with a different coloured flash to indicate the type.

In the event of fire you should:

- raise the alarm;
- turn off machinery, gas and electricity supplies in the area of the fire;
- close doors and windows but without locking or bolting them;
- remove combustible materials and fuels away from the path of the fire, if the fire is small, and if this can be done safely;
- attack small fires with the correct extinguisher.

Only attack the fire if you can do so without endangering your own safety in any way. Always leave your own exit from the danger zone clear. Those not involved in fighting the fire should walk to a safe area or assembly point.

Fires are divided into four classes or categories:

- Class A are wood, paper and textile fires.
- Class B are liquid fires such as paint, petrol and oil.
- Class C are fires involving gas or spilled liquefied gas.
- Class D are very special types of fire involving burning metal.

Electrical fires do not have a special category because, once started, they can be identified as one of the four above types.

Definition

Fire extinguishers remove heat from a fire and are a first response for small fires.

Fire extinguishers are for dealing with small fires, and different types of fire must be attacked with a different type of extinguisher. Using the wrong type of extinguisher could make matters worse. For example, water must not be used on a liquid or electrical fire. The normal procedure when dealing with electrical fires is to cut off the electrical supply and use an extinguisher which is appropriate to whatever is burning. Figure 1.10 shows the correct type of extinguisher to be used on the various categories of fire. The colour coding shown is in accordance with BS EN3: 1996.

Evacuation procedures

When the fire alarm sounds you must leave the building immediately by any one of the escape routes indicated. **Exit routes** are usually indicated by a green and white 'running man' symbol. Evacuation should be orderly, do not run but walk purposefully to your designated assembly point.

Definition

Exit routes are usually indicated by a green and white 'running man' symbol. Evacuation should be orderly, do not run but walk purposefully to your designated assembly point.

The purpose of an **assembly point** is to get you away from danger to a place of safety where you will not be in the way of the emergency services. It also allows for people to be accounted for and to make sure that no one is left in the building. You must not re-enter the building until a person in authority gives permission to do so.

An evacuation in a real emergency can be a frightening experience, especially if you do not really know what to do, so take time to familiarize yourself with the fire safety procedures where you are working before an emergency occurs.

Definition

The purpose of an *assembly point* is to get you away from danger to a place of safety where you will not be in the way of the emergency services.

Health and safety risks, precautions and procedures

Earlier in this chapter, we looked at some of the health and safety rules and regulations. In particular, we now know that the Health and Safety at Work Act is the most important piece of recent legislation, because it places

responsibilities for safety at work on both employers and employees. This responsibility is enforceable by law. We know what the regulations say about the control of substances, which might be hazardous to our health at work, because we briefly looked at the COSHH Regulations 2002 earlier in this chapter. We also know that if there is a risk to health and safety at work our employer must provide personal protective equipment (PPE) free of charge, for us to use so that we are safe at work. The law is in place, we all apply the principles of health and safety at work and we always wear the appropriate PPE, so what are the risks? Well, getting injured at work is not a pleasant subject to think about but each year about 300 people in Great Britain lose their lives at work. In addition, there are about 158,000 non-fatal injuries reported to the Health and Safety Executive (HSE) each year and an estimated 2.2 million people suffer ill health caused by, or made worse by, work. It is a mistake to believe that these things only happen in dangerous occupations such as deep-sea diving, mining and quarrying, fishing industry, tunnelling and fire fighting or that it only happens in exceptional circumstances such as would never happen in your workplace. This is not the case. Some basic thinking and acting beforehand could have prevented most of these accident statistics from happening.

The most common categories of risk and causes of accidents at work are:

- slips, trips and falls
- manual handling, that is moving objects by hand
- using equipment, machinery or tools
- storage of goods and materials which then become unstable
- fire
- electricity
- mechanical handling.

Precautions taken to control risks:

- eliminate the cause
- substitute a procedure or product with less risk
- enclose the dangerous situation
- put guards around the hazard
- use safe systems of work
- supervise, train and give information to staff
- if the hazard cannot be removed or minimized then provide PPE.

Let us now look at the application of some of the procedures that make the workplace a safer place to work, but first I want to explain what I mean, when I use the words hazard and risk.

Hazard and risk

A **hazard** is something with the 'potential' to cause harm, for example, chemicals, electricity or working above ground.

A **risk** is the 'likelihood' of harm actually being done.

Competent persons are often referred to in the Health and Safety at Work Regulations, but who is 'competent'? For the purposes of the Act, a competent person is anyone who has the necessary technical skills, training and expertise to safely carry out the particular activity. Therefore, a competent person dealing with a hazardous situation reduces the risk.

Definition

A *hazard* is something with the 'potential' to cause harm, for example, chemicals, electricity or working above ground.

A *risk* is the 'likelihood' of harm actually being done.

Definition

A *competent person* is anyone who has the necessary technical skills, training and expertise to safely carry out the particular activity.

Think about your workplace and at each stage of what you do, think about what might go wrong. Some simple activities may be hazardous. Here are some typical activities where accidents might happen.

Typical activity	Potential hazard
Receiving materials	Lifting and carrying
Stacking and storing	Falling materials
Movement of people	Slips, trips and falls
Building maintenance	Working at heights or in confined spaces
Movement of vehicles	Collisions

How high are the risks? Think about what might be the worst result; is it a broken finger or someone suffering permanent lung damage or being killed? How likely is it to happen? How often is that type of work carried out and how close do people get to the hazard? How likely is it that something will go wrong?

How many people might be injured if things go wrong? Might this also include people who do not work for your company?

Definition

Employers of more than five people must document the risks at work and the process is known as *hazard risk assessment*.

Employers of more than five people must document the risks at work and the process is known as **hazard risk assessment**.

Hazard risk assessment: the procedure

The Management of Health and Safety at Work Regulations 1999 tells us that employers must systematically examine the workplace, the work activity and the management of safety in the establishment through a process of risk assessments. A record of all significant risk assessment findings must be kept in a safe place and be made available to an HSE inspector if required. Information based on the risk assessment findings must be communicated to relevant staff and if changes in work behaviour patterns are recommended in the interests of safety, then they must be put in place.

So risk assessment must form a part of any employer's robust policy of health and safety. However, an employer only needs to 'formally' assess the significant risks. He is not expected to assess the trivial and minor types of household risks. Staff are expected to read and to act upon these formal risk assessments, and they are unlikely to do so enthusiastically if the file is full of trivia. An assessment of risk is nothing more than a careful examination of what, in your work, could cause harm to people. It is a record that shows whether sufficient precautions have been taken to prevent harm.

The HSE recommends five steps to any risk assessment.

Step 1

Look at what might reasonably be expected to cause harm. Ignore the trivial and concentrate only on significant hazards that could result in serious harm or injury. Manufacturer's data sheets or instructions can also help you spot hazards and put risks in their true perspective.

Step 2

Decide who might be harmed and how. Think about people who might not be in the workplace all the time – cleaners, visitors, contractors or maintenance personnel.

Include members of the public or people who share the workplace. Is there a chance that they could be injured by activities taking place in the workplace?

Step 3

Evaluate what is the risk arising from an identified hazard. Is it adequately controlled or should more be done? Even after precautions have been put in place, some risk may remain. What you have to decide, for each significant hazard, is whether this remaining risk is low, medium or high. First of all, ask yourself if you have done all the things that the law says you have got to do. For example, there are legal requirements on the prevention of access to dangerous machinery. Then ask yourself whether generally accepted industry standards are in place, but do not stop there – think for yourself, because the law also says that you must do what is reasonably practicable to keep the workplace safe. Your real aim is to make all risks small by adding precautions, if necessary.

If you find that something needs to be done, ask yourself:

- Can I get rid of this hazard altogether?
- If not, how can I control the risk so that harm is unlikely?

Only use PPE when there is nothing else that you can reasonably do.

If the work that you do varies a lot, or if there is movement between one site and another, select those hazards which you can reasonably foresee, the ones that apply to most jobs and assess the risks for them. After that, if you spot any unusual hazards when you get on site, take what action seems necessary.

Key fact

Definition

- Hazard is something that might cause harm
- Risk is the chance that harm will be done.

Step 4

Record your findings and say what you are going to do about risks that are not adequately controlled. If there are fewer than five employees you do not need to write anything down but if there are five or more employees, the significant findings of the risk assessment must be recorded. This means writing down the more significant hazards and assessing if they are adequately controlled and recording your most important conclusions. Most employers have a standard risk assessment form which they use such as that shown in Fig. 1.11 but any format is suitable. The important thing is to make a record.

There is no need to show how the assessment was made, provided you can show that:

1. a proper check was made
2. you asked those who might be affected
3. you dealt with all obvious and significant hazards
4. the precautions are reasonable and the remaining risk is low
5. you informed your employees about your findings.

Risk assessments need to be *suitable* and *sufficient*, not perfect. The two main points are:

1. Are the precautions reasonable?
2. Is there a record to show that a proper check was made?

File away the written assessment in a dedicated file for future reference or use. It can help if an HSE inspector questions the company's precautions or if the company becomes involved in any legal action. It shows that the company has done what the law requires.

Definition

Risk assessments need to be *suitable* and *sufficient*, not perfect.

Step 5

Review the assessments from time to time and revise them if necessary.

HAZARD RISK ASSESSMENT	FLASH-BANG ELECTRICAL CO.
For Company name or site: ..... Address:	Assessment undertaken by: ..... Signed: ..... Date: .....
STEP 5 Assessment review date:	
STEP 1 List the hazards here	STEP 2 Decide who might be harmed ....
STEP 3 Evaluate (what is) the risk – is it adequately controlled? State risk level as low, medium or high	STEP 4 Further action – what else is required to control any risk identified as medium or high? ....

Figure 1.11 Hazard risk assessment standard form.

Method Statement

The Construction, Design and Management Regulations and Approved Codes of Practice define a method statement as a written document laying out the work procedure and sequence of operations to ensure health and safety.

If the method statement is written as a result of a risk assessment carried out for a task or operation, then following the prescribed method will reduce the risk.

The safe isolation procedure described in Fig. 1.23 of this Chapter is a method statement. Following this method meets the requirements of the Electricity at Work Regulations, the IEE Regulations and reduces the risk of electric shock to the operative and other people who might be affected by his actions.

Completing a risk assessment

When completing a risk assessment such as that shown in Fig. 1.11, do not be over complicated. In most firms in the commercial, service and light industrial sector, the hazards are few and simple. Checking them is common sense but necessary.

Step 1

List only hazards which you could reasonably expect to result in significant harm under the conditions prevailing in your workplace. Use the following examples as a guide:

- Slipping or tripping hazards (e.g. from poorly maintained or partly installed floors and stairs)
- Fire (e.g. from flammable materials you might be using, such as solvents)
- Chemicals (e.g. from battery acid)
- Moving parts of machinery (e.g. blades)
- Rotating parts of hand tools (e.g. drills)
- Accidental discharge of cartridge operated tools
- High pressure air from airlines (e.g. air powered tools)
- Pressure systems (e.g. steam boilers)
- Vehicles (e.g. fork lift trucks)
- Electricity (e.g. faulty tools and equipment)
- Dust (e.g. from grinding operations or thermal insulation)
- Fumes (e.g. from welding)
- Manual handling (e.g. lifting, moving or supporting loads)
- Noise levels too high (e.g. machinery)
- Poor lighting levels (e.g. working in temporary or enclosed spaces)
- Low temperatures (e.g. working outdoors or in refrigeration plant)
- High temperatures (e.g. working in boiler rooms or furnaces).

Step 2

Decide who might be harmed, do not list individuals by name. Just think about groups of people doing similar work or who might be affected by your work:

- Office staff
- Electricians
- Maintenance personnel
- Other contractors on site
- Operators of equipment
- Cleaners
- Members of the public.

Pay particular attention to those who may be more vulnerable, such as:

- staff with disabilities
- visitors
- young or inexperienced staff
- people working in isolation or enclosed spaces.

Step 3

Calculate what is the risk – is it adequately controlled? Have you already taken precautions to protect against the hazards which you have listed in Step 1? For example:

- have you provided adequate information to staff?
- have you provided training or instruction?

Do the precautions already taken

- meet the legal standards required?
- comply with recognized industry practice?

Safety first

Safety Procedures

- Hazard risk assessment is *an essential part* of any health and safety management system
- The aim of the planning process is to minimize risk
- HSE Publication HSG (65).

- represent good practice?
- reduce the risk as far as is reasonably practicable?

If you can answer 'yes' to the above points then the risks are adequately controlled, but you need to state the precautions you have put in place. You can refer to company procedures, company rules, company practices, etc., in giving this information. For example, if we consider there might be a risk of electric shock from using electrical power tools, then the risk of a shock will be *less* if the company policy is to portable appliance test (PAT) all power tools each year and to fit a label to the tool showing that it has been tested for electrical safety. If the stated company procedure is to use battery drills whenever possible, or 110 V drills when this is not possible, and to *never* use 230 V drills, then this again will reduce the risk. If a policy such as this is written down in the company Safety Policy Statement, then you can simply refer to the appropriate section of the Safety Policy Statement and the level of risk will be low. (Note: PAT testing is described in Advanced Electrical Installation Work.)

Step 4

Further action – what more could be done to reduce those risks which were found to be inadequately controlled?

You will need to give priority to those risks that affect large numbers of people or which could result in serious harm. Senior managers should apply the principles below when taking action, if possible in the following order:

1. Remove the risk completely
2. Try a less risky option
3. Prevent access to the hazard (e.g. by guarding)
4. Organize work differently in order to reduce exposure to the hazard
5. Issue PPE
6. Provide welfare facilities (e.g. washing facilities for removal of contamination and first aid).

Any hazard identified by a risk assessment as *high risk* must be brought to the attention of the person responsible for health and safety within the company. Ideally, in Step 4 of the risk assessment you should be writing 'No further action is required. The risks are under control and identified as low risk'.

The assessor may use as many standard hazard risk assessment forms, such as that shown in Fig. 1.11, as the assessment requires. Upon completion they should be stapled together or placed in a plastic wallet and stored in the dedicated file.

You might like to carry out a risk assessment on a situation you are familiar with at work, using the standard form of Fig. 1.11, or your employer's standard forms. Alternatively, you might like to complete the visual display unit (VDU) workstation risk assessment checklist given in the next section.

We all use computers, and you might find it interesting to carry out a risk assessment of the computer workstation you use most, either at home, work or college, just for fun and to get an idea of how to carry out a risk assessment.

VDU operation hazards

Those who work at supermarket checkouts, assemble equipment or components, or work for long periods at a VDU and keyboard can be at risk because of the repetitive nature of the work. The hazard associated with these

activities is a medical condition called ‘upper limb disorders’. The term covers a number of related medical conditions.

Health and Safety (Display Screen Equipment) Regulations 1992

To encourage employers to protect the health of their workers and reduce the risks associated with VDU work, the HSE have introduced the Health and Safety (Display Screen Equipment) Regulations 1992. The regulations came into force on 1 January 1993, and employers who use standard office VDUs must show that they have taken steps to comply with the regulations.

So who is affected by the regulations? The regulations identify employees who use VDU equipment as ‘users’ if they:

- use a VDU more or less continuously on most days
- use a VDU more or less continuously for periods of an hour or more each day
- need to transfer information quickly to or from the screen
- need to apply high levels of attention or concentration to information displayed on a screen
- are very dependent upon VDUs or have little choice about using them.

All VDU users must be trained to use the equipment safely and protect themselves from upper limb disorders, temporary eyestrain, headaches, fatigue and stress.

To comply with the regulations an employer must:

- train users of VDU equipment and those who will carry out a risk assessment
- carry out a workstation risk assessment
- plan changes of activities or breaks for users
- provide eye and eyesight testing for users
- make sure new workstations comply with the regulations in the future
- give users information on the above.

User training

Good user training will normally cover the following topics:

- the operating hazards and risks as described above
- the importance of good posture and changing position as shown in Fig. 1.12
- how to adjust furniture to avoid risks
- how to organize the workstation to avoid awkward or repeated stretching movements

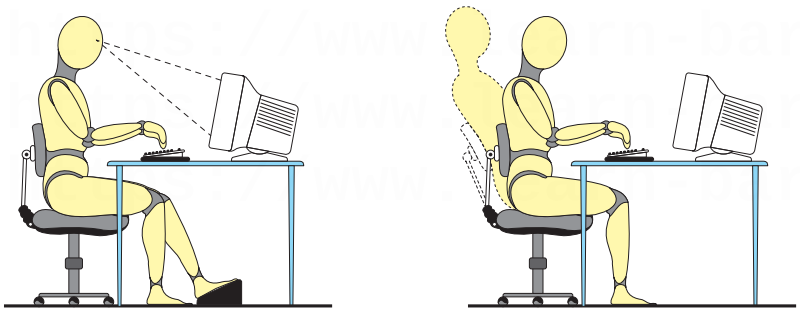

Figure 1.12 Examples of good posture when using VDU equipment.

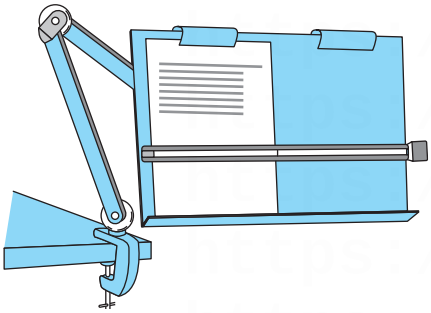

Figure 1.13 A document holder typically used by a word processing VDU operator.

- how to avoid reflections and glare on the monitor screen
- how to organize working routines so that there is a change of activity or a break
- how to adjust and clean the monitor screen
- how a user might contribute to a workstation risk assessment
- who to contact if problems arise.

When carrying out user training, the trainer might want to consider using a video, a computer-based training programme, discussions or seminars or the HSE employee leaflet *Working with VDUs* which can be obtained from the address given in Appendix B.

Workstation risk assessment

A simple way to carry out a workstation risk assessment is to use a checklist such as that shown later in this section. Users can work through the checklist themselves. They know what the problems at their workstation are and whether they are comfortable or not. A trainer/assessor should then check the completed checklist and resolve the problems which the user cannot solve. For example, users may not know how the adjustment mechanism actually operates on their chair – a shorter user may benefit from a footrest as shown in Fig. 1.12, or a document holder may be more convenient for word processing users as shown in Fig. 1.13.

Breaks

Breaking up long spells of display screen work helps to prevent fatigue and upper limb problems. Where possible encourage VDU users to carry out other tasks such as taking telephone calls, filing and photocopying. Otherwise, plan for users to take breaks away from the VDU screen if possible. The length of break required is not fixed by the law; the time will vary depending upon the work being done. Breaks should be taken before users become tired and short frequent breaks are better than longer infrequent ones.

Eye and eyesight testing

VDU users and those who are to become users of VDU equipment can request an eye and eyesight test that is free of charge to them. If the test shows that they need glasses specifically to carry out their VDU work, then their employer must pay for a basic pair of frames and lenses. Users are also entitled to further tests at regular intervals but if the user's normal glasses are suitable for VDU work, then the employer is not required to pay for them.

Workstations

Make sure that new workstations comply with the regulations when:

- major changes to the workstation display screen equipment, furniture or software are made
- new users start work or change workstations
- workstations are re-sited
- the nature of the work changes considerably.

Users, trainers and assessors should focus on those aspects which have changed. For example:

- if the location of the workstation has changed, is the lighting adequate, is lighting or sunlight now reflecting off the display unit?

- different users have different needs – replacing a tall user with a short user may mean that a footrest is required
- users working from a number of source documents will need more desk space than users who are word processing.

A risk assessment should always be carried out on a new workstation or when a new operator takes over a workstation. Some questions cannot be answered until a user has had an opportunity to try the workstation. For example, does the user find the layout comfortable to operate, are there reflections on the screen at different times of the day as the sun moves around the building?

To be comfortable the operator should adjust the chair and equipment so that:

- Arms are horizontal and eyes are roughly at the height of the top of the VDU casing.
- Hands can rest on the work surface in front of the keyboard with fingers outstretched over the keys.
- Feet are placed flat on the floor – too much pressure on the backs of legs and knees may mean that a footrest is needed.
- The small of the back is supported by the chair. The back should be held straight with the shoulders relaxed.

The arms on the chair or obstructions under the desk must not prevent the user from getting close enough to the keyboard comfortably.

Information

Good employers, who comply with the Display Screen Equipment Regulations, should let their employees know what care has been taken to reduce the risk to their health and safety at work. Users should be given information on:

- the health and safety relating to their particular workstations
- the risk assessments carried out and the steps taken to reduce risks
- the recommended break times and changes in activity to reduce risks
- the company procedures for obtaining eye and eyesight tests.

This information might be communicated to workers by:

- telling staff, for example, as part of an induction programme
- circulating a booklet or leaflet to relevant staff
- putting the information on a notice board
- using a computer-based information system, provided staff are trained in their use.

VDU workstation risk assessment checklist

Using a checklist such as that shown below or the more extensive checklist shown in the HSE book '*VDUs, An Easy Guide to the Regulations*' is one way to assess workstation risks. You do not have to, but many employers find it a convenient method.

Risk factors are grouped under five headings and to each question the user should initially give a simple yes/no response. A 'yes' response means that no further action is necessary but a 'no' response will indicate that further follow-up action is required to reduce or eliminate risks to a user.

1 *Is the display screen image clear?*

1.1 Are the characters readable? Y/N

1.2 Is the image free of flicker and movement? Y/N

1.3 Are brightness and contrast adjustable? Y/N
1.4 Does the screen swivel and tilt? Y/N
1.5 Is the screen free from glare and reflections? Y/N

2 *Is the keyboard comfortable?*
2.1 Is the keyboard tiltable? Y/N
2.2 Can you find a comfortable keyboard position? Y/N
2.3 Is there enough space to rest your hands in front of the keyboard? Y/N
2.4 Are the characters on the keys easily readable? Y/N

3 *Does the furniture fit the work and user?*
3.1 Is the work surface large enough? Y/N
3.2 Is the surface free of reflections? Y/N
3.3 Is the chair stable? Y/N
3.4 Do the adjustment mechanisms work? Y/N
3.5 Are you comfortable? Y/N

4 *Is the surrounding environment risk free?*
4.1 Is there enough room to change position and vary movement? Y/N
4.2 Are levels of light, heat and noise comfortable? Y/N
4.3 Does the air feel comfortable in terms of temperature and humidity? Y/N

5 Is the software user friendly?
5.1 Can you comfortably use the software? Y/N
5.2 Is the software suitable for the work task? Y/N
5.3 Have you had enough training? Y/N

A copy of all risk assessments carried out should be placed in a dedicated file which can then be held by the trainer/assessor or other responsible person.

A copy of the full checklist can be found in the publication '*VDUs, an Easy Guide to the Regulations*'. Other relevant publications include 'Display Screen Equipment Work and Guidance on Regulations L26' and 'Industry Advisory (General) leaflet IND(G) 36(L) 1993 Working with VDUs'. These and other health and safety publications are available from the HSE; the address is given in Appendix B.

Safe manual handling

Definition

Manual handling is lifting, transporting or supporting loads by hand or by bodily force.

Manual handling is lifting, transporting or supporting loads by hand or by bodily force. The load might be any heavy object, a printer, a VDU, a box of tools or a stepladder. Whatever the heavy object is, it must be moved thoughtfully and carefully, using appropriate lifting techniques if personal pain and injury are to be avoided. *Many people hurt their back, arms and feet, and over one-third of all 3-day reported injuries submitted to the HSE each year are the result of manual handling*.

Safety first

Lifting
- bend your legs
- keep your back straight
- use the leg muscles to raise the weight in a smooth movement

When lifting heavy loads, correct lifting procedures must be adopted to avoid back injuries. Figure 1.14 demonstrates the technique. Do not lift objects from the floor with the back bent and the legs straight as this causes excessive stress on the spine. Always lift with the back straight and the legs bent so that the powerful leg muscles do the lifting work. Bend at the hips and knees to get down to the level of the object being lifted, positioning the body as close to the object as possible. Grasp the object firmly and, keeping the back straight and the head erect, use the leg muscles to raise in a smooth movement. Carry the load close to the body. When putting the object down, keep the back straight and bend at the hips and knees, reversing the lifting procedure. A bad lifting technique will result in sprains, strains and pains. *There have been too many injuries over the*

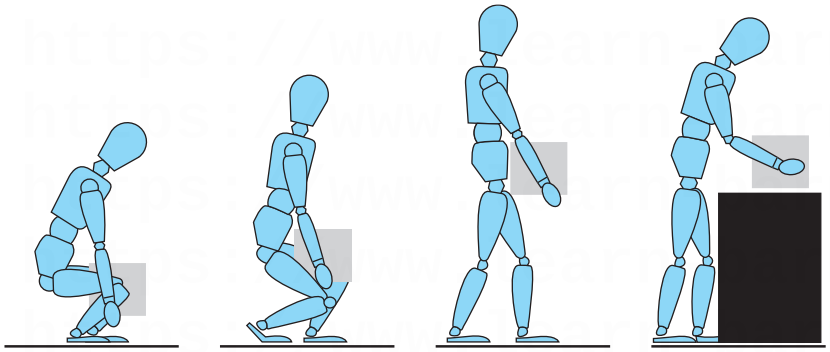

Figure 1.14 Correct manual lifting and carrying procedure.

years resulting from bad manual handling techniques. The problem has become so serious that the HSE has introduced new legislation under the Health and Safety at Work Act 1974, the Manual Handling Operations Regulations 1992. Publications such as *Getting to Grips with Manual Handling* can be obtained from HSE Books; the address and Infoline are given in Appendix B.

Where a job involves considerable manual handling, employers must now train employees in the correct lifting procedures and provide the appropriate equipment necessary to promote the safe manual handling of loads.

Consider some 'good practice' when lifting loads.

- Do not lift the load manually if it is more appropriate to use a mechanical aid. Only lift or carry what you can easily manage.
- Always use a trolley, wheelbarrow or truck such as that shown in Fig. 1.15 when these are available.
- Plan ahead to avoid unnecessary or repeated movement of loads.
- Take account of the centre of gravity of the load when lifting – the weight acts through the centre of gravity.
- Never leave a suspended load unsupervised.
- Always lift and lower loads gently.
- Clear obstacles out of the lifting area.
- Use the manual lifting techniques described above and avoid sudden or jerky movements.
- Use gloves when manual handling to avoid injury from rough or sharp edges.
- Take special care when moving loads wrapped in grease or bubble-wrap.
- Never move a load over other people or walk under a suspended load.

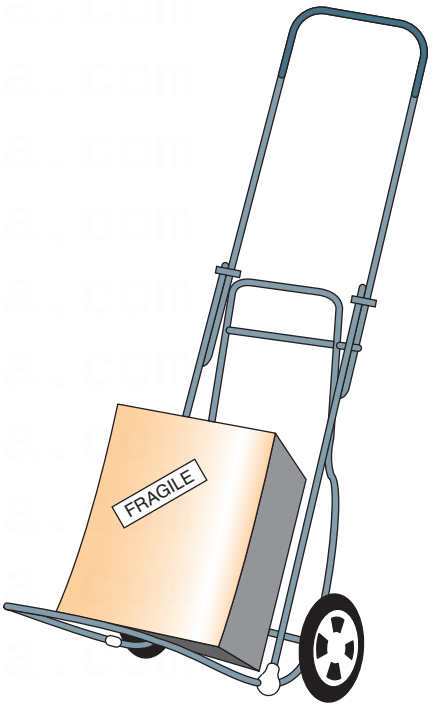

Figure 1.15 Always use a mechanical aid to transport a load when available.

Working at height regulations

Working above ground level creates added dangers and slows down the work rate of the electrician. New Work at Height Regulations came into force on 6 April 2005. Every precaution should be taken to ensure that the working platform is appropriate for the purpose and in good condition.

Ladders

The term ladder is generally taken to include step ladders and trestles. The use of ladders for working above ground level is only acceptable for access and work of short duration (Work at Height Regulations 2005).

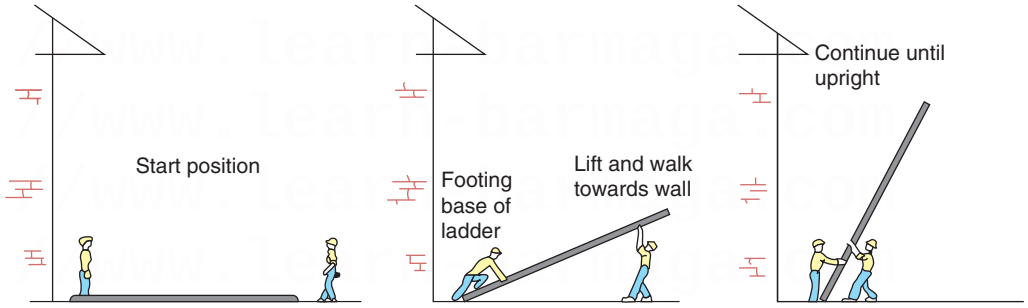

Figure 1.17 Correct procedure for erecting long or extension ladder.

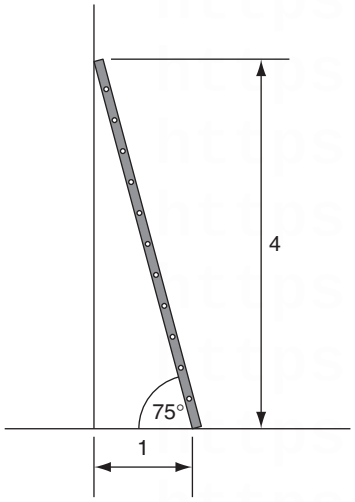

Figure 1.16 A correctly erected ladder.

It is advisable to inspect the ladder before climbing it. It should be straight and firm. All rungs and tie rods should be in position and there should be no cracks in the stiles. The ladder should not be painted since the paint may be hiding defects.

Extension ladders should be erected in the closed position and extended one section at a time. Each section should overlap by at least the number of rungs indicated below:

- Ladder up to 4.8 m length – 2 rungs overlap
- Ladder up to 6.0 m length – 3 rungs overlap
- Ladder over 6.0 m length – 4 rungs overlap.

The angle of the ladder to the building should be in the proportion 4 up to 1 out or 75° as shown in Fig. 1.16. The ladder should be lashed at the top and bottom when possible to prevent unwanted movement and placed on firm and level ground. Footing is only considered effective for ladders smaller than 6 m and manufactured securing devices should always be considered. When ladders provide access to a roof or working platform the ladder must extend at least 1.05 m or 5 rungs above the landing place.

Short ladders may be carried by one person resting the ladder on the shoulder, but longer ladders should be carried by two people, one at each end, to avoid accidents when turning corners.

Long ladders or extension ladders should be erected by two people as shown in Fig. 1.17. One person stands on or 'foots' the ladder, while the other person lifts and walks under the ladder towards the wall. When the ladder is upright it can be positioned in the correct place, at the correct angle and secured before being climbed.

Safety first

Ladders

New Working at Height Regulations tell us:

- Ladders are only to be used for access
- Must only be used for work of short duration.

Trestle scaffold

Figure 1.18 shows a trestle scaffold. Two pairs of trestles spanned by scaffolding boards provide a simple working platform. The platform must be at least two boards or 450 mm wide. At least one-third of the trestle must be above the working platform. If the platform is more than 2 m above the ground, toeboards and guardrails must be fitted, and a separate ladder provided for access. The boards which form the working platform should be of equal length and not overhang the trestles by more than four times their own thickness. The maximum span of boards between trestles is:

- 1.3 m for boards 40 mm thick
- 2.5 m for boards 50 mm thick.

Trestles which are higher than 3.6 m must be tied to the building to give them stability. Where anyone can fall more than 4.5 m from the working platform, trestles may not be used.

Safety first

Scaffold

- scaffold or mobile towers are always safer than ladders for working above ground.

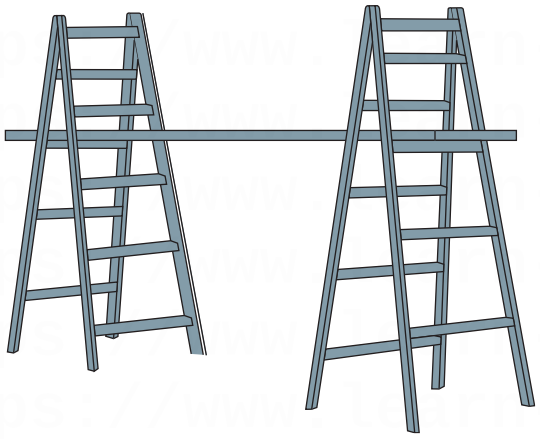

Figure 1.18 A trestle scaffold.

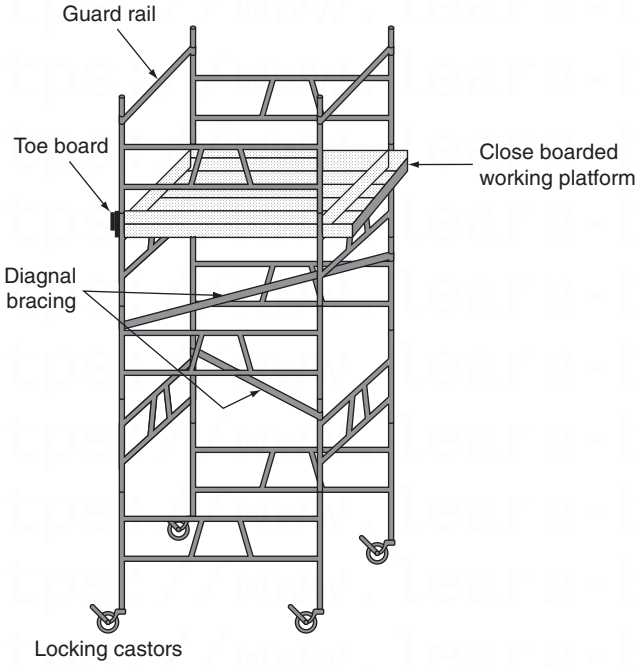

Figure 1.19 A mobile scaffold tower.

Mobile scaffold towers

Mobile scaffold towers may be constructed of basic scaffold components or made from light alloy tube. The tower is built up by slotting the sections together until the required height is reached. A scaffold tower is shown in Fig. 1.19.

If the working platform is above 2 m from the ground it must be close boarded and fitted with guardrails and toeboards. When the platform is being used, all four wheels must be locked. The platform must not be moved unless it is clear of tools, equipment and workers and should be pushed at the base of the tower and not at the top.

The stability of the tower depends upon the ratio of the base width to tower height. A ratio of base to height of 1:3 gives good stability. Outriggers can be used to increase stability by effectively increasing the base width. If outriggers are used then they must be fitted diagonally across all four corners of the tower

and not on one side only. The tower must not be built more than 12 m high unless it has been specially designed for that purpose. Any tower higher than 9 m should be secured to the structure of the building to increase stability.

Access to the working platform of a scaffold tower should be by a ladder securely fastened vertically to the inside of the tower. Ladders must never be leaned against a tower since this might push the tower over.

Secure electrical isolation

Safety first

Isolation

- never work 'live'
- isolate
- secure the isolation
- prove the supply 'dead' before starting work.

Electric shock occurs when a person becomes part of the electrical circuit. The level or intensity of the shock will depend upon many factors, such as age, fitness and the circumstances in which the shock is received. The lethal level is approximately 50 mA, above which muscles contract, the heart flutters and breathing stops. A shock above the 50 mA level is therefore fatal unless the person is quickly separated from the supply. Below 50 mA only an unpleasant tingling sensation may be experienced or you may be thrown across a room or shocked enough to fall from a roof or ladder, but the resulting fall may lead to serious injury.

To prevent people receiving an electric shock accidentally, all circuits contain protective devices. All exposed metal is earthed; fuses and miniature circuit breakers (MCBs) are designed to trip under fault conditions, and residual current devices (RCDs) are designed to trip below the fatal level as described in Chapter 4.

Construction workers and particularly electricians do receive electric shocks, usually as a result of carelessness or unforeseen circumstances. As an electrician working on electrical equipment you must always make sure that the equipment is switched off or electrically isolated before commencing work. Every circuit must be provided with a means of isolation (IEE Regulation 132.15). When working on portable equipment or desk top units it is often simply a matter of unplugging the equipment from the adjacent supply. Larger pieces of equipment and electrical machines may require isolating at the local isolator switch before work commences. To deter anyone from re-connecting the supply while work is being carried out on equipment, a sign 'Danger – Electrician at Work' should be displayed on the isolator and the isolation 'secured' with a small padlock or the fuses removed so that no one can re-connect whilst work is being carried out on that piece of equipment. The Electricity at Work Regulations 1989 are very specific at Regulation 12(1) that we must ensure the disconnection and separation of electrical equipment from every source of supply and that this disconnection and separation is secure. Where a test instrument or voltage indicator is used to prove the supply dead, Regulation 4(3) of the Electricity at Work Regulations 1989 recommends that the following procedure is adopted.

Definition

Electrical isolation We must ensure the disconnection and separation of electrical equipment from every source of supply and that this disconnection and separation is secure.

1. First connect the test device such as that shown in Fig. 1.20 to the supply which is to be isolated. The test device should indicate mains voltage.
2. Next, isolate the supply and observe that the test device now reads zero volts.
3. Then connect the same test device to a known live supply or proving unit such as that shown in Fig. 1.21 to 'prove' that the tester is still working correctly.
4. Finally secure the isolation and place warning signs; only then should work commence.

The test device being used by the electrician must incorporate safe test leads which comply with the Health and Safety Executive Guidance Note 38 on electrical test equipment. These leads should incorporate barriers to prevent the

Figure 1.20 Typical voltage indicator.

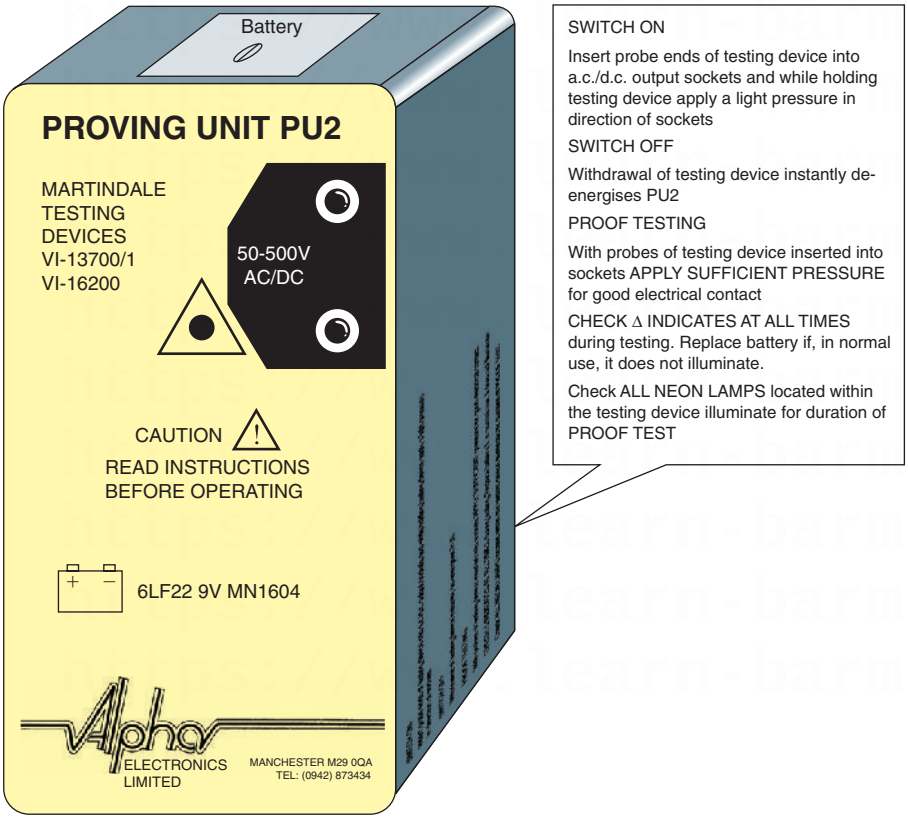

Figure 1.21 Voltage proving unit.

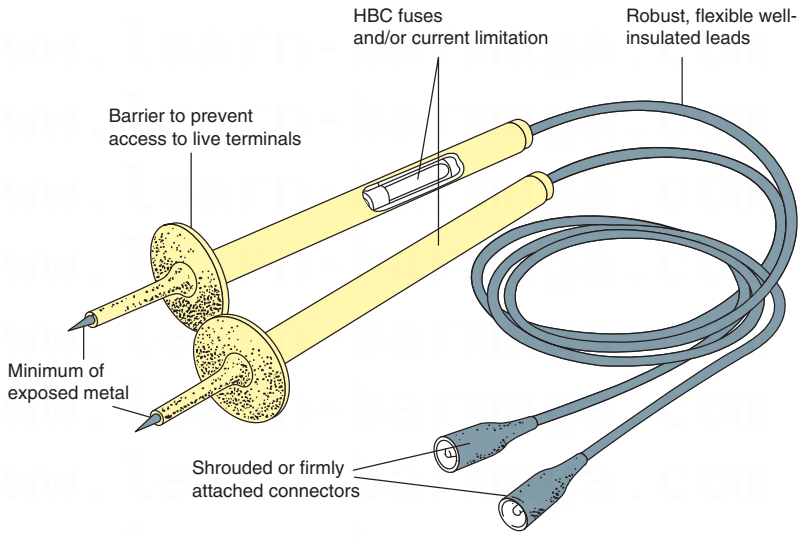

Figure 1.22 Recommended type of test probe and leads.

user touching live terminals when testing and incorporating a protective fuse and be well insulated and robust, such as those shown in Fig. 1.22.

To isolate a piece of equipment or individual circuit successfully, competently, safely and in accordance with all the relevant regulations, we must follow a procedure such as that given by the flow diagram of Fig. 1.23. Start at the top and work down the flow diagram.

When the heavy outlined amber boxes are reached, pause and ask yourself whether everything is satisfactory up to this point. If the answer is 'yes', move on. If the answer is 'no', go back as indicated by the diagram.

Live testing

The Electricity at Work Regulations 1989 at Regulation 4(3) tell us that it is preferable that supplies be made dead before work commences. However, it does acknowledge that some work, such as fault finding and testing, may require the electrical equipment to remain energized. Therefore, if the fault finding and testing can only be successfully carried out live then the person carrying out the fault diagnosis must:

- be trained so that they understand the equipment and the potential hazards of working live and can, therefore, be deemed 'competent' to carry out that activity
- only use approved test equipment
- set up appropriate warning notices and barriers so that the work activity does not create a situation dangerous to others.

While live testing may be required by workers in the electrotechnical industries in order to find the fault, live repair work must not be carried out. The individual circuit or piece of equipment must first be isolated before work commences in order to comply with the Electricity at Work Regulations 1989.

Electric shock

Temporary electrical supplies on construction sites can save many person-hours of labour by providing energy for fixed and portable tools and lighting. However, as stated previously in this chapter, construction sites are dangerous places and the temporary electrical supplies must be safe. IEE Regulation 110.1 tells us that

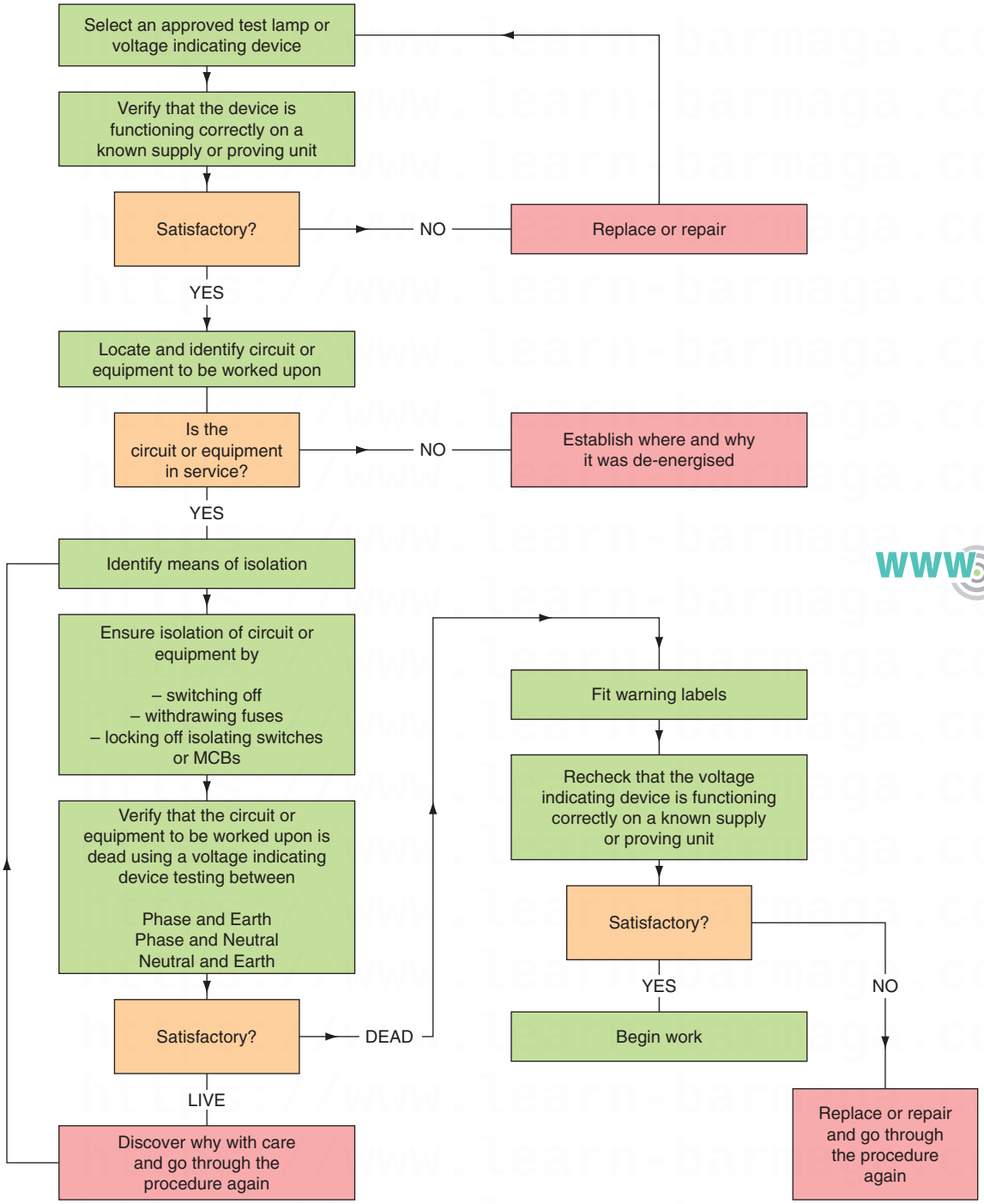

Figure 1.23 Flowchart for a secure isolation procedure.

ALL the regulations apply to temporary electrical installations such as construction sites. The frequency of inspection of construction sites is increased to every 3 months because of the inherent dangers. Regulation 704.313.4 recommends the following voltages for distributing to plant and equipment on construction sites:

400 V – fixed plant such as cranes

230 V – site offices and fixed floodlighting robustly installed

110 V – portable tools and hand lamps

SELV – portable lamps used in damp or confined places.

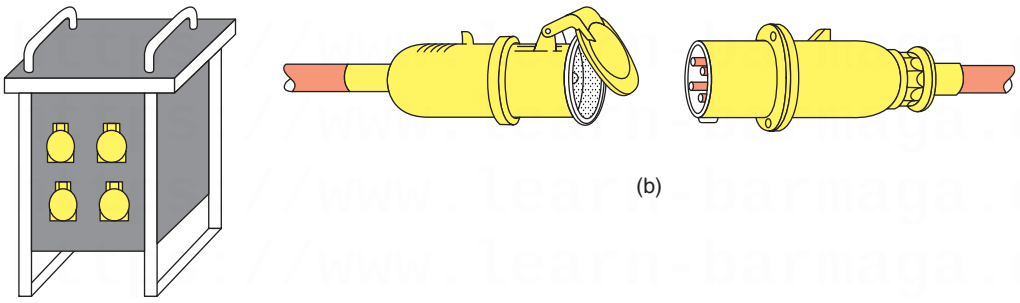

Figure 1.24 110 volts distribution unit and cable connector suitable for construction site electrical supplies: (a) reduced-voltage distribution unit incorporating industrial sockets to BS 4343; (b) industrial plug and connector.

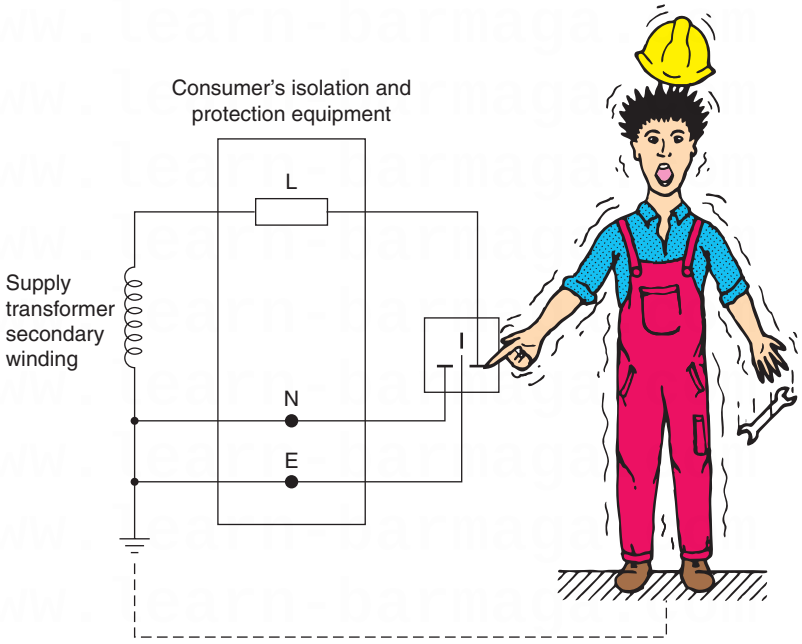

Figure 1.25 Touching live and earth or live and neutral makes a person part of the electrical circuit and can lead to an electric shock.

Portable tools must be fed from a 110 V socket outlet unit (see Fig. 1.24(a)) incorporating splash-proof sockets and plugs with a keyway which prevents a tool from one voltage being connected to the socket outlet of a different voltage.

Socket outlet and plugs are also colour-coded for voltage identification: 25 V violet, 50 V white, 110 V yellow, 230 V blue and 400 V red, as shown in Fig. 1.24(b).

Electric shock occurs when a person becomes part of the electrical circuit, as shown in Fig. 1.25. The level or intensity of the shock will depend upon many factors, such as age, fitness and the circumstances in which the shock is received. The lethal level is approximately 50 mA, above which muscles contract, the heart flutters and breathing stops. A shock above the 50 mA level is therefore fatal unless the person is quickly separated from the supply. Below 50 mA only an unpleasant tingling sensation may be experienced or you may be thrown across a room, roof or ladder, but the resulting fall may lead to serious injury.

Definition

Electric shock occurs when a person becomes part of the electrical circuit.

To prevent people receiving an electric shock accidentally, all circuits must contain protective devices. All exposed metal must be earthed; fuses and miniature circuit breakers (MCBs) are designed to trip under fault conditions and residual current devices (RCDs) are designed to trip below the fatal level.

Construction workers and particularly electricians do receive electric shocks, usually as a result of carelessness or unforeseen circumstances. When this happens it is necessary to act quickly to prevent the electric shock becoming fatal. Actions to be taken upon finding a workmate receiving an electric shock are as follows:

- Switch off the supply if possible.
- Alternatively, remove the person from the supply *without touching him*, e.g. push him off with a piece of wood, pull him off with a scarf, dry towel or coat.
- If breathing or heart has stopped, immediately call professional help by dialling 999 and asking for the ambulance service. Give precise directions to the scene of the accident. The casualty stands the best chance of survival if the emergency services can get a rapid response paramedic team quickly to the scene. They have extensive training and will have specialist equipment with them.
- Only then should you apply resuscitation or cardiac massage until the patient recovers, or help arrives.
- Treat for shock.

First aid

Despite all the safety precautions taken on construction sites to prevent injury to the workforce, accidents do happen and *you* may be the only other person able to take action to assist a workmate. If you are not a qualified first aider limit your help to obvious common sense assistance and call for help, *but* do remember that if a workmate's heart or breathing has stopped as a result of an accident he has only minutes to live unless you act quickly. The Health and Safety (First Aid) Regulations 1981 and relevant approved codes of practice and guidance notes place a duty of care on all employers to provide *adequate* first aid facilities appropriate to the type of work being undertaken. *Adequate* facilities will relate to a number of factors such as:

- How many employees are employed?
- What type of work is being carried out?
- Are there any special or unusual hazards?
- Are employees working in scattered and/or isolated locations?
- Is there shift work or 'out of hours' work being undertaken?
- Is the workplace remote from emergency medical services?
- Are there inexperienced workers on site?
- What were the risks of injury and ill health identified by the company's hazard risk assessment?

The regulations state that:

> *Employers are under a duty to provide such numbers of suitable persons as is adequate and appropriate in the circumstances for rendering first aid to his employees if they are injured or become ill at work. For this purpose a person shall not be suitable unless he or she has undergone such training and has such qualifications as the Health and Safety Executive may approve.*

This is typical of the way in which the Health and Safety Regulations are written. The regulations and codes of practice do not specify numbers, but set out guidelines in respect of the number of first aiders needed, dependent upon the type of company, the hazards present and the number of people employed.

Definition

First aid is the initial assistance or treatment given to a casualty for any injury or sudden illness before the arrival of an ambulance, doctor or other medically qualified person.

Let us now consider the questions 'what is first aid'? and 'who might become a first aider'? The regulations give the following definitions of first aid. '*First aid* is the treatment of minor injuries which would otherwise receive no treatment or do not need treatment by a doctor or nurse' *or* 'In cases where a person will require help from a doctor or nurse, first aid is treatment for the purpose of preserving life and minimizing the consequences of an injury or illness until such help is obtained'. A more generally accepted definition of first aid might be as follows: **first aid** is the initial assistance or treatment given to a casualty for any injury or sudden illness before the arrival of an ambulance, doctor or other medically qualified person.

Now having defined first aid, who might become a first aider? A **first aider** is someone who has undergone a training course to administer first aid at work and holds a current first aid certificate. The training course and certification must be approved by the HSE. The aims of a first aider are to preserve life, to limit the worsening of the injury or illness and to promote recovery.

Definition

A *first aider* is someone who has undergone a training course to administer first aid at work and holds a current first aid certificate.

A first aider may also undertake the duties of an appointed person. An **appointed person** is someone who is nominated to take charge when someone is injured or becomes ill, including calling an ambulance if required. The appointed person will also look after the first aid equipment, including re-stocking the first aid box.

Appointed persons should not attempt to give first aid for which they have not been trained, but should limit their help to obvious common sense assistance and summon professional assistance as required. Suggested numbers of first aid personnel are given in Table 1.1. The actual number of first aid personnel must take into account any special circumstances such as remoteness from medical services, the use of several separate buildings and the company's hazard risk assessment. First aid personnel must be available at all times when people are at work, taking into account shift working patterns and providing cover for sickness absences.

Definition

An *appointed person* is someone who is nominated to take charge when someone is injured or becomes ill, including calling an ambulance if required. The appointed person will also look after the first aid equipment, including re-stocking the first aid box.

Every company must have at least one first aid kit under the regulations. The size and contents of the kit will depend upon the nature of the risks involved in the particular working environment and the number of employees. Table 1.2 gives a list of the contents of any first aid box to comply with the HSE Regulations.

There now follows a description of some first aid procedures which should be practised under expert guidance before they are required in an emergency.

Bleeding

If the wound is dirty, rinse it under clean running water. Clean the skin around the wound and apply a plaster, pulling the skin together.

If the bleeding is severe apply direct pressure to reduce the bleeding and raise the limb if possible. Apply a sterile dressing or pad and bandage firmly before obtaining professional advice.

To avoid possible contact with hepatitis or the AIDS virus when dealing with open wounds, first aiders should avoid contact with fresh blood by wearing plastic

or rubber protective gloves, or by allowing the casualty to apply pressure to the bleeding wound.

Burns

Remove heat from the burn to relieve the pain by placing the injured part under clean cold water. Do not remove burnt clothing sticking to the skin. Do not apply lotions or ointments. Do not break blisters or attempt to remove loose skin. Cover the injured area with a clean dry dressing.

Broken bones

Make the casualty as comfortable as possible by supporting the broken limb either by hand or with padding. Do not move the casualty unless by remaining in that position he is likely to suffer further injury. Obtain professional help as soon as possible.

Contact with chemicals

Wash the affected area very thoroughly with clean cold water. Remove any contaminated clothing. Cover the affected area with a clean sterile dressing and seek expert advice. It is a wise precaution to treat all chemical substances as possibly harmful; even commonly used substances can be dangerous if contamination is from concentrated solutions. When handling dangerous substances, it is also good practice to have a neutralizing agent to hand.

Disposal of dangerous substances must not be into the main drains since this can give rise to an environmental hazard, but should be undertaken in accordance with local authority regulations.

Exposure to toxic fumes

Get the casualty into fresh air quickly and encourage deep breathing if he/she is conscious. Resuscitate if breathing has stopped. Obtain expert medical advice as fumes may cause irritation of the lungs.

Sprains and bruising

A cold compress can help to relieve swelling and pain. Soak a towel or cloth in cold water, squeeze it out and place it on the injured part. Renew the compress every few minutes.

Breathing stopped

Remove any restrictions from the face and any vomit, loose or false teeth from the mouth. Loosen tight clothing around the neck, chest and waist. To ensure a good airway, lay the casualty on his back and support the shoulders on some padding. Tilt the head backwards and open the mouth. If the casualty is faintly breathing, lifting the tongue, clearing of the airway may be all that is necessary to restore normal breathing. However, if the casualty does not begin to breathe, open your mouth wide and take a deep breath, close the casualty's nose by

pinching with your fingers, and, sealing your lips around his mouth, blow into his lungs until the chest rises. Remove your mouth and watch the casualty's chest fall. Continue this procedure at your natural breathing rate. If the mouth is damaged or you have difficulty making a seal around the casualty's mouth, close his mouth and inflate the lungs through his nostrils. Give artificial respiration until natural breathing is restored or until professional help arrives.

Heart stopped beating

This sometimes happens following a severe electric shock. If the casualty's lips are blue, the pupils of his eyes widely dilated and the pulse in his neck cannot be felt, then he may have gone into cardiac arrest. Act quickly and lay the casualty on his back. Kneel down beside him and place the heel of one hand in the centre of his chest. Cover this hand with your other hand and interlace the fingers. Straighten your arms and press down on his chest sharply with the heel of your hands and then release the pressure. Continue to do this 15 times at the rate of one push per second. Check the casualty's pulse. If none is felt, give two breaths of artificial respiration and then a further 15 chest compressions. Continue this procedure until the heartbeat is restored and the artificial respiration until normal breathing returns. Pay close attention to the condition of the casualty while giving heart massage. When a pulse is restored the blueness around the mouth will quickly go away and you should stop the heart massage. Look carefully at the rate of breathing. When this is also normal, stop giving artificial respiration. Treat the casualty for shock, place him in the recovery position and obtain professional help.

Shock

Everyone suffers from shock following an accident. The severity of the shock depends upon the nature and extent of the injury. In cases of severe shock the casualty will become pale and his skin become clammy from sweating. He may feel faint, have blurred vision, feel sick and complain of thirst. Reassure the casualty that everything that needs to be done is being done. Loosen tight clothing and keep him warm and dry until help arrives. *Do not* move him unnecessarily or give him anything to drink.

Accident reports

Figure 1.26 First aid log book/accident book with data protection compliant removable sheets.

Every accident must be reported to an employer and minor accidents reported to a supervisor, safety officer or first aider and the details of the accident and treatment given suitably documented. A first aid logbook or accident book such as that shown in Fig. 1.26 containing first aid treatment record sheets could be used to effectively document accidents which occur in the workplace and the treatment given. Failure to do so may influence the payment of compensation at a later date if an injury leads to permanent disability. To comply with the Data Protection Regulations, from 31 December 2003 all First Aid Treatment Logbooks or Accident Report books must contain perforated sheets which can be removed after completion and filed away for personal security.

If the accident results in death, serious injury or an injury that leads to an absence from work of more than 3 days, then your employer must report the

accident to the local office of the HSE. The quickest way to do this is to call the Incident Control Centre on 0845 300 9923. They will require the following information:

- The name of the person injured.
- A summary of what happened.
- A summary of events prior to the accident.
- Information about the injury or loss sustained.
- Details of witnesses.
- Date and time of accident.
- Name of the person reporting the incident.

The Incident Control Centre will forward a copy of every report they complete to the employer for them to check and hold on record. However, good practice would recommend an employer or his representative make an extensive report of any serious accident that occurs in the workplace. In addition to recording the above information, the employer or his representative should:

- Sketch diagrams of how the accident occurred, where objects were before and after the accident, where the victim fell, etc.
- Take photographs or video that show how things were after the accident, for example, broken stepladders, damaged equipment, etc.
- Collect statements from witnesses. Ask them to write down what they saw.
- Record the circumstances surrounding the accident. Was the injured person working alone – in the dark – in some other adverse situation or condition – was PPE being worn – was PPE recommended in that area?

The above steps should be taken immediately after the accident has occurred and after the victim has been sent for medical attention. The area should be made safe and the senior management informed so that any actions to prevent a similar occurrence can be put in place. Taking photographs and obtaining witnesses' statements immediately after an accident happens, means that evidence may still be around and memories still sharp.

Dangerous occurrences and hazardous malfunctions

Dangerous occurrence – is a 'near miss' that could easily have led to serious injury or loss of life. Dangerous occurrences are defined in the Reporting of Injuries, Diseases and Dangerous Occurrences Regulations (RIDDOR) 1995. Near miss accidents occur much more frequently than injury accidents and are, therefore, a good indicator of hazard, which is why the HSE collects this data. In January 2008 a BA passenger aeroplane lost power to both engines as it prepared to land at Heathrow airport. The pilots glided the plane into a crash landing on the grass just short of the runway. This is one example of a dangerous occurrence which could so easily have been a disaster.

Consider another example – on a wet and windy night a large section of scaffold around a town centre building collapses. Fortunately this happens about midnight when no one is around because of the time and the bad weather. However, if it had occurred at midday, workers would have been using the scaffold and the streets would have been crowded with shoppers. This would be classified as a dangerous occurrence and must be reported to

Definition

Dangerous occurrence – is a 'near miss' that could easily have led to serious injury or loss of life. Near miss accidents occur much more frequently than injury accidents and are, therefore, a good indicator of hazard, which is why the HSE collects this data.

the HSE, who will investigate the cause and, using their wide range of powers, would either:

- stop all work,
- demand the dismantling of the structure,
- issue an Improvement Notice,
- issue a Prohibition Notice,
- prosecute those who have failed in their health and safety duties.

Other reportable dangerous occurrences are:

- the collapse of a lift,
- plant coming into contact with overhead power lines,
- any unexpected collapse which projects material beyond the site boundary,
- the overturning of a road tanker,
- a collision between a car and a train.

Hazardous malfunction – if a piece of equipment was to fail in its function, that is fail to do what it is supposed to do and, as a result of this failure have the potential to cause harm, then this would be defined as a hazardous malfunction. Consider an example – if a 'materials lift' on a construction site was to collapse when the supply to its motor failed, this would be a hazardous malfunction. All the regulations concerning work equipment state that it must be:

- suitable for its intended use;
- safe in use;
- maintained in a safe condition;
- used only by instructed persons;
- provided with suitable safety measures, protective devices and warning signs.

Definition

Hazardous malfunction – if a piece of equipment was to fail in its function, that is fail to do what it is supposed to do and, as a result of this failure have the potential to cause harm, then this would be defined as a hazardous malfunction.

Disposing of waste

We have said many times in this book so far, that having a good attitude to health and safety, working conscientiously and neatly, keeping passageways clear and regularly tidying up the workplace is the sign of a good and competent craftsman. But what do you do with the rubbish that the working environment produces? Well, all the packaging material for electrical fittings and accessories usually goes into either your employer's skip or the skip on site designated for that purpose. All the off-cuts of conduit, trunking and tray also go into the skip. In fact, most of the general site debris will probably go into the skip and the waste disposal company will take the skip contents to a designated local council land fill area for safe disposal.

The part coils of cable and any other reuseable leftover lengths of conduit, trunking or tray will be taken back to your employer's stores area. Here it will be stored for future use and the returned quantities deducted from the costs allocated to that job.

What goes into the skip for normal disposal into a land fill site is usually a matter of common sense. However, some substances require special consideration and disposal. We will now look at asbestos and large quantities of used fluorescent tubes.

Control of asbestos at work regulations

In October 2010 the HSE launched a national campaign to raise awareness among electricians and other trades of the risk to their health of coming into

contact with asbestos. It is called the 'Hidden Killer Campaign' because every year approximately six electricians will die each week from asbestos related diseases. For more information about asbestos hazards, visit www.hse.uk/hiddenkiller.

Asbestos is a mineral found in many rock formations. When separated it becomes a fluffy, fibrous material with many uses. It was used extensively in the construction industry during the 1960s and 1970s for roofing material, ceiling and floor tiles, fire resistant board for doors and partitions, for thermal insulation and commercial and industrial pipe lagging.

In the buildings where it was installed some 40 years ago, when left alone, it did not represent a health hazard, but those buildings are increasingly becoming in need of renovation and modernization. It is in the dismantling, drilling and breaking up of these asbestos materials that the health hazard increases. Asbestos is a serious health hazard if the dust is inhaled. The tiny asbestos particles find their way into delicate lung tissue and remain embedded for life, causing constant irritation and eventually, serious lung disease.

Asbestos materials may be encountered by electricians in decorative finishes such as artex ceiling finishes, plaster and floor tiles. In control gear such as flash guards and matting in fuse carriers and distribution fuse boards, and in insulation materials in vessels, containers, pipework, ceiling ducts and wall and floor partitions.

Working with asbestos materials is not a job for anyone in the electrotechnical industry. If asbestos is present in situations or buildings where you are expected to work, it should be removed by a specialist contractor before your work commences. Specialist contractors, who will wear fully protective suits and use breathing apparatus, are the only people who can safely and responsibly carry out the removal of asbestos. They will wrap the asbestos in thick plastic bags and store them temporarily in a covered and locked skip. This material is then disposed of in a special land fill site with other toxic industrial waste materials and the site monitored by the local authority for the foreseeable future.

There is a lot of work for electrical contractors in my part of the country, updating and improving the lighting in government buildings and schools. This work often involves removing the old fluorescent fittings, hanging on chains or fixed to beams, and installing a suspended ceiling and an appropriate number of recessed modular fluorescent fittings. So what do we do with the old fittings? Well, the fittings are made of sheet steel, a couple of plastic lampholders, a little cable, a starter and ballast. All of these materials can go into the ordinary skip. However, the fluorescent tubes contain a little mercury and fluorescent powder with toxic elements, which cannot be disposed of in the normal land fill sites.

Hazardous Waste Regulations 2005

New Hazardous Waste Regulations were introduced in July 2005 and under these regulations lamps and tubes are classified as hazardous. While each lamp contains only a small amount of mercury, vast numbers of lamps and tubes are disposed of in the United Kingdom every year resulting in a significant environmental threat.

The environmentally responsible way to dispose of fluorescent lamps and tubes is to recycle them.

The process usually goes like this:

- your employer arranges for the local electrical wholesaler to deliver a plastic used lamp waste container of an appropriate size for the job

Safety first

Waste
- clean up before you leave the job
- put waste in the correct skip
- recycle used lamps and tubes
- get rid of all waste responsibly.

- expired lamps and tubes are placed whole into the container, which often has a grating inside to prevent the tubes breaking when being transported
- when the container is full of used lamps and tubes, you telephone the electrical wholesaler and ask them to pick up the filled container and deliver it to one of the specialist recycling centres
- your electrical company will receive a 'Duty of Care Note' and full recycling documents which ought to be filed safely as proof that the hazardous waste was recycled safely
- the charge is approximately 50p for each 1800 mm tube and this cost is passed on to the customer through the final account.

Definition

Human errors include behaving badly or foolishly, being careless and not paying attention to what you should be doing at work.

Safe working procedures

The principles which were laid down in the many Acts of Parliament and the regulations that we have already looked at in this chapter, control our working environment. They make our workplace safer, but despite all this legislation, workers continue to be injured and killed at work or die as a result of a work-related injury. The number of deaths has consistently averaged about 200 each year for the past 8 years. These figures only relate to employees. If you include the self-employed and members of the public killed in work-related accidents, the numbers almost double.

Definition

Environmental conditions include unguarded or faulty machinery.

In addition to the deaths, about 28,000 people have major accidents at work and about 130,000 people each year, receive minor work-related injuries which keep them off work for more than 3 days.

It is a mistake to believe that these things only happen in dangerous occupations such as deep sea diving, mining and quarrying, fishing industry, tunnelling and fire-fighting or that it only happens in exceptional circumstances such as would never happen in your workplace. This is not the case. Some basic thinking and acting beforehand, could have prevented most of these accident statistics, from happening.

Safety first

Safety Procedures
- Hazard risk assessment *is an essential part* of any health and safety management system.
- The aim of the planning process is to minimize risk.
- HSE publication HSG(65).

Causes of accidents

Most accidents are caused by either human error or environmental conditions. **Human errors** include behaving badly or foolishly, being careless and not paying attention to what you should be doing at work, doing things that you are not competent to do or have not been trained to do. You should not work when tired or fatigued and should never work when you have been drinking alcohol or taking drugs.

Environmental conditions include unguarded or faulty machinery, damaged or faulty tools and equipment, poorly illuminated or ventilated workplaces and untidy, dirty or overcrowded workplaces.

The most common causes of accidents

These are:
- slips, trips and falls
- manual handling, that is moving objects by hand
- using equipment, machinery or tools
- storage of goods and materials which then become unstable
- fire
- electricity
- mechanical handling.

Accident prevention measures

To control the risk of an accident we usually:

- eliminate the cause
- substitute a procedure or product with less risk
- enclose the dangerous situation
- put guards around the hazard
- use safe systems of work
- supervise, train and give information to staff
- if the hazard cannot be removed or minimized then provide PPE.

In other chapters of this book we will look at the application of procedures that make the workplace a safer place to work.

Check your understanding

When you have completed the questions, check out the answers at the back of the book.

Note: more than one multiple choice answer may be correct.

1 For any fire to continue to burn, three components must be present. These are:
   a. fuel, wood and cardboard
   b. petrol, oxygen and bottled gas
   c. flames, fuel and heat
   d. fuel, oxygen and heat.

2 A water fire extinguisher is suitable for use on small fires of burning
   a. wood, paper and fabric
   b. flammable liquids
   c. flammable gas
   d. all of the above.

3 A foam fire extinguisher is suitable for use on small fires of burning
   a. wood, paper and fabric
   b. flammable liquids
   c. flammable gas
   d. all of the above.

4 A carbon dioxide gas fire extinguisher is suitable for use on small fires of burning
   a. wood, paper and fabric
   b. flammable liquids
   c. flammable gas
   d. all of the above.

5 A dry powder fire extinguisher is suitable for use on small fires of burning
   a. wood, paper and fabric
   b. flammable liquids
   c. flammable gas
   d. all of the above.

6 A vapourizing foam fire extinguisher is suitable for use on small fires of burning
   a. wood, paper and fabric
   b. flammable liquids
   c. flammable gas
   d. all of the above.

7 You should only attack a fire with a fire extinguisher if
   a. it is burning brightly
   b. you can save someone's property
   c. you can save someone's life
   d. you can do so without putting yourself at risk.

8 A fire extinguisher should only be used to fight
   a. car fires
   b. electrical fires
   c. small fires
   d. big fires.

9 A Statutory Regulation
   a. is the law of the land
   b. must be obeyed
   c. tells us how to comply with the law
   d. is a code of practice.

10 A Non-statutory Regulation
   a. is the law of the land
   b. must be obeyed
   c. tells us how to comply with the law
   d. is a code of practice.

11 Under the Health and Safety at Work Act an employer is responsible for
   a. maintaining plant and equipment
   b. providing PPE
   c. wearing PPE
   d. taking reasonable care to avoid injury.

12 Under the Health and Safety at Work Act an employee is responsible for
   a. maintaining plant and equipment
   b. providing PPE
   c. wearing PPE
   d. taking reasonable care to avoid injury.

13 The IEE Wiring Regulations
   a. are Statutory regulations
   b. are non-statutory regulations
   c. are codes of good practice
   d. must always be complied with.

14 Before beginning work on a 'live' circuit or piece of equipment you should
   a. only work 'live' if your supervisor is with you
   b. only work 'live' if you feel that you are 'competent' to do so
   c. isolate the circuit or equipment before work commences
   d. secure the isolation before work commences.

15 The initial assistance or treatment given to a casualty for any injury or sudden illness before the arrival of an ambulance or medically qualified person is one definition of
   a. an appointed person
   b. a first aider

c. first aid
d. an adequate first aid facility.

16 Someone who has undergone a training course to administer medical aid at work and holds a current qualification is one definition of
a. a doctor
b. a nurse
c. a first aider
d. a supervisor.

17 Two of the most common categories of risk and causes of accidents at work are:
a. slips, trips and falls
b. put guards around the hazard
c. manual handling
d. use safe systems of work.

18 Two of the most common precautions taken to control risks are:
a. slips, trips and falls
b. put guards around the hazard
c. manual handling
d. use safe systems of work

19 Something which has the potential to cause harm is one definition of:
a. health and safety
b. risk
c. competent person
d. hazard.

20 The chances of harm actually being done is one definition of:
a. electricity
b. risk
c. health and safety
d. hazard.

21 A competent person dealing with a hazardous situation:
a. must wear appropriate PPE
b. display a health and safety poster
c. reduces the risk
d. increases the risk.

22 Employers of companies employing more than five people must:
a. become a member of the NICEIC
b. provide PPE if appropriate
c. carry out a hazard risk assessment
d. display a health and safety poster.

23 There are five parts to a hazard risk assessment procedure. Identify one from the list below:
a. wear appropriate PPE
b. notify the HSE that you intend to carry out a risk assessment
c. list the hazards and who might be harmed
d. substitute a procedure with less risk.

24 Lifting, transporting or supporting heavy objects by hand or bodily force is one definition of:
   a. working at height
   b. a mobile scaffold tower
   c. a sack truck
   d. manual handling.

25 When working above ground for long periods of time the most appropriate piece of equipment to use would be:
   a. a ladder
   b. a trestle scaffold
   c. a mobile scaffold tower
   d. a pair of sky hooks.

26 The most appropriate piece of equipment to use for gaining access to a permanent scaffold would be:
   a. a ladder
   b. a trestle scaffold
   c. a mobile scaffold tower
   d. a pair of sky hooks.

27 The Electricity at Work Regulations tell us that 'we must ensure the disconnection and separation of electrical equipment from every source of supply and the separation must be secure'. A procedure to comply with this regulation is called:
   a. work at height
   b. a hazard risk assessment
   c. a safe isolation procedure
   d. a workstation risk assessment.

28 The Electricity at Work Regulations absolutely forbid the following work activity:
   a. working at height
   b. testing live electrical systems
   c. live repair work on electrical circuits
   d. working without the appropriate PPE.

29 'Good housekeeping' at work is about:
   a. cleaning up and putting waste in the skip
   b. working safely
   c. making the tea and collecting everyone's lunch
   d. putting tools and equipment away after use.

30 Use bullet points to describe a safe isolation procedure of a 'live' electrical circuit.

31 How does the law enforce the regulations of the Health and Safety at Work Act?

32 List the responsibilities under the Health and Safety at Work Act of:
   a. an employer to his employees
   b. an employee to his employer.

33 Safety signs are used in the working environment to give information and warning. Sketch and colour one sign from each of the four categories of signs and state the message given by that sign.

34 State the name of two important Statutory Regulations and one Non-statutory Regulation relevant to the electrotechnical industry.

35 Define what is meant by PPE.

36 State five pieces of PPE which a trainee could be expected to wear at work and the protection given by each piece.

37 Describe the action to be taken upon finding a workmate apparently dead on the floor and connected to an electrical supply.

38 State how the Data Protection Act has changed the way in which we record accident and first aid information at work.

39 List five common categories of risk.

40 List five common precautions which might be taken to control risk.

41 Use bullet points to list the main stages involved in lifting a heavy box from the floor, carrying it across a room and placing it on a worktop, using a safe manual handling technique.

42 Describe a safe manual handling technique for moving a heavy electric motor out of the stores, across a yard and into the back of a van for delivery to site.

43 Use bullet points to list a step-by-step safe electrical isolation procedure for isolating a circuit in a three-phase distribution fuse board.

44 Use bullet points to list each stage in the erection and securing of a long extension ladder. Identify all actions which would make the ladder safe to use.

45 Describe how you would use a mobile scaffold tower to re-lamp all the light fittings in a supermarket. Use bullet points to give a step-by-step account of re-lamping the first two fittings.

46 What is a proving unit used for?

47 The HSE Guidance Note GS 38 tells us about suitable test probe leads. Use a sketch to identify the main recommendations.

48 State how you would deal with the following materials when you are cleaning up at the end of the job:
- pieces of conduit and tray
- cardboard packaging material
- empty cable rolls
- half full cable rolls
- bending machines for conduit and tray
- your own box of tools
- your employer's power tools
- 100 old fluorescent light fittings
- 200 used fluorescent tubes.

CHAPTER 2

Understanding environmental legislation and environmental technology systems

Unit 302 of the City and Guilds 2357 syllabus

Understanding environmental legislation, working practices and the principles of environmental technology systems

Online Material

This chapter has free associated content, including animations and instructional videos, to support your learning

When you see the logo, visit the website below to access this material:

www.elsevierdirect.com/companions/9780080966281

Environmental laws and regulations

The environment describes the world in which we live work and play, it relates to our neighbourhood and surroundings and the situation in which we find ourselves.

Environmental laws protect the environment in which we live by setting standards for the control of pollution to land, air and water.

If a wrong is identified in the area in which we now think of as 'environmental' it can be of two kinds.

1. An offence in common law which means damage to property, nuisance or negligence leading to a claim for damages.
2. A statutory offence against one of the laws dealing with the protection of the environment. These offences are nearly always 'crimes' and punished by fines or imprisonment rather than by compensating any individual.

The legislation dealing with the environment has evolved for each part – air, water, land noise, radioactive substances. Where organizations' activities impact upon the environmental laws they are increasingly adopting

Definition

The environment describes the world in which we live work and play, it relates to our neighbourhood and surroundings and the situation in which we find ourselves.

Basic Electrical Installation Work. 978-0-08-096628-1

environmental management systems which comply with ISO 14001. Let us now look at some of the regulations and try to see the present picture at the beginning of the new millennium.

Environmental Protection Act 1990

In the context of environmental law, the Environmental Protection Act 1990 was a major piece of legislation. The main sections of the Act are:

Part 1	Integrated pollution control by HM Inspectorate of Pollution, and air pollution control by Local Authorities
Part 2	Wastes on land
Part 3	Statutory nuisances and clean air
Part 4	Litter
Part 5	Radioactive Substances Act 1960
Part 6	Genetically modified organisms
Part 7	Nature conservation
Part 8	Miscellaneous, including contaminated land.

The Royal Commission of 1976 identified that a reduction of pollutant to one medium, air, water or land, then led to an increase of pollutant in another. It therefore stressed the need to take an integrated approach to pollution control. The processes subject to an integrated pollution control are:

- Air emissions
- Processes which give rise to significant quantities of special waste, that is, waste defined in law in terms of its toxicity or flammability
- Processes giving rise to emissions to sewers or 'Red List' substances. These are 23 substances including mercury, cadmium and many pesticides which are subject to discharge consent to the satisfaction of the Environment Agency.

Where a process is under integrated control the Inspectorate is empowered to set conditions to ensure that the best practicable environmental option (BPEO) is employed to control pollution. This is the cornerstone of the Environmental Protection Act.

Pollution Prevention and Control Regulations 2000

The system of Pollution Prevention and Control replaced that of Integrated Pollution Control established by the Environmental Protection Act 1990, thus bringing environmental law into the new millennium and implementing the European Directive (EC/96/61) on integrated pollution prevention and control. The new system was fully implemented in 2007.

Pollution Prevention and Control is a regime for controlling pollution from certain industrial activities. This regime introduces the concept of Best Available Technique (BAT) for reducing and preventing pollution to an acceptable level.

Industrial activities are graded according to their potential to pollute the environment:

- A(1) installations are regulated by the Environment Agency
- A(2) installations are regulated by the Local Authorities
- Part B installations are also regulated by the Local Authority

All three systems require the operators of certain industrial installations to obtain a permit to operate. Once an operator has submitted a permit application, the regulator then decides whether to issue a permit. If one is issued it will include conditions aimed at reducing and preventing pollution to acceptable levels. A(1) installations are generally perceived as having the greatest potential to pollute the environment. A(2) installations and Part B installations would have the least potential to pollute.

The industries affected by these regulations are those dealing with petrol vapour recovery, incineration of waste, mercury emissions from crematoria, animal rendering, non-ferrous foundry processes, surface treating of metals and plastic materials by powder coating, galvanizing of metals and the manufacture of certain specified composite wood-based boards.

Clean Air Act 1993

We are all entitled to breathe clean air but until quite recently the only method of heating houses and workshops was by burning coal, wood or peat in open fires. The smoke from these fires created air pollution and the atmosphere in large towns and cities was of poor quality. On many occasions in the 1950s the burning of coal in London was banned because the city was grinding to a halt because of the combined effect of smoke and fog, called smog. Smog was a very dense fog in which you could barely see more than a metre in front of you and which created serious breathing difficulties. In the new millennium we are no longer dependent upon coal and wood to heat our buildings; smokeless coal has been created and the gaseous products of combustion are now diluted and dispersed by new chimney design regulations. Using well engineered combustion equipment together with the efficient arrestment of small particles in commercial chimneys of sufficient height, air pollution has been much reduced. This is what the Clean Air Act set out to achieve and it has been largely successful.

The Clean Air Act applies to all small and medium sized companies operating furnaces, boilers, or incinerators. Compliance with the Act does not require an application for authorization and so companies must make sure that they do not commit an offence. In general the emission of dark smoke from any chimney is unacceptable. The emission of dark smoke from any industrial premises is also unacceptable. This might be caused by, for example, the burning of old tyres or old cable.

In England, Scotland and Wales it is not necessary for the Local Authority to have witnessed the emission of dark smoke before taking legal action. Simply the evidence of burned materials, which potentially give rise to dark smoke when burned, is sufficient. In this way the law aims to stop people creating dark smoke under the cover of darkness.

A **public nuisance** is 'an act unwarranted by law or an omission to discharge a legal duty which materially affects the life, health, property, morals or reasonable comfort or convenience of Her Majesty's subjects'. This is a criminal offence and Local Authorities can prosecute, defend or appear in proceedings that affect the inhabitants of their area.

Definition

The *Clean Air Act* applies to all small and medium sized companies operating furnaces, boilers, or incinerators.

Definition

A *public nuisance* is 'an act unwarranted by law or an omission to discharge a legal duty which materially affects the life, health, property, morals or reasonable comfort or convenience of Her Majesty's subjects'.

Controlled Waste Regulations 1998

Under these regulations we have a 'Duty of Care to handle, recover and dispose of all waste responsibly'. This means that all waste must be handled, recovered and disposed of by individuals or businesses that are authorized to do so under a system of signed Waste Transfer Notes.

The Environmental Protection (Duty of Care) Regulations 1991 state that as a business you have a duty to ensure that any waste you produce is handled safely and in accordance with the law. This is the Duty of Care and applies to anyone who produces, keeps, carries, treats or disposes of waste from business or industry.

You are responsible for the waste that you produce, even after you have passed it on to another party such as a skip hire company, a scrap metal merchant, recycling company or local council. The Duty of Care has no time limit and extends until the waste has either been finally and properly disposed of or fully recovered.

So what does this mean for your company?

- Make sure that waste is only transferred to an authorized company.
- Make sure that waste being transferred is accompanied by the appropriate paperwork showing what was taken, where it was to be taken and by whom.
- Segregate the different types of waste that your work creates.
- Label waste skips and waste containers so that it is clear to everyone what type of waste goes into that skip.
- Minimize the waste that you produce and do not leave waste behind for someone else to clear away. Remember there is no time limit on your Duty of Care for waste.

Occupiers of domestic properties are exempt from the Duty of Care for the household waste that they produce. However, they do have a Duty of Care for the waste produced by, for example, a tradesperson working at a domestic property.

Special waste is covered by the Special Waste Regulations 1996 and is waste that is potentially hazardous or dangerous and which may, therefore, require special precautions during handling, storage, treatment or disposal. Examples of special waste are asbestos, lead-acid batteries, used engine oil, solvent-based paint, solvents, chemical waste and pesticides. The disposal of special waste must be carried out by a competent person, with special equipment and a licence.

Definition

Special waste is covered by the Special Waste Regulations 1996 and is waste that is potentially hazardous or dangerous and which may, therefore, require special precautions during handling, storage, treatment or disposal. Examples of special waste are asbestos, lead-acid batteries, used engine oil, solvent-based paint, solvents, chemical waste and pesticides.

Hazardous Waste Regulations 2005

New Hazardous Waste Regulations were introduced in July 2005 and under these regulations electric discharge lamps and tubes such as fluorescent, sodium, metal halide and mercury vapour are classified as hazardous waste. While each lamp only contains a very small amount of mercury, vast numbers are used and disposed of each year, resulting in a significant environmental threat. The environmentally responsible way to dispose of lamps and tubes is to recycle them and this process is now available through electrical wholesalers' as described in Chapter 1.

Electrotechnical companies produce relatively small amounts of waste and even smaller amounts of special waste. Most companies buy in the expertise of specialist waste companies these days and build these costs into the contract.

Packaging (Essential Requirements) Regulations 2003

The new Packaging Regulations were introduced on 25 August 2003 bringing the UK into harmony with Europe. The regulations deal with the essential requirements of packaging for the storage and transportation of goods. There are two essential elements to the regulations:

1. the packaging shall be designed and manufactured so that the volume and weight is to the minimum amount required to maintain the necessary level of safety for the packaged product and
2. the packaging shall be designed and manufactured in such a way that the packaging used is either reusable or re-recyclable.

The regulations are enforced by the Weights and Measures Authority in Great Britain, the Department of Enterprise Trade and Investment in Northern Ireland and the Procurator-fiscal or Lord Advocate in Scotland.

Definition

The new *Packaging Regulations* were introduced on 25 August 2003 bringing the UK into harmony with Europe. The regulations deal with the essential requirements of packaging for the storage and transportation of goods.

Waste Electrical and Electronic Equipment EU Directive 2007

The Waste Electrical and Electronic Equipment (WEEE) Regulations will ensure that Britain complies with its EU obligation to recycle waste from electrical products. The regulations came into effect in July 2007 and from that date any company which makes, distributes or trades in electrical or electronic goods such as household appliances, sports equipment and even torches and toothbrushes has to make arrangements for recycling these goods at the end of their useful life. Batteries will be covered separately by yet another forthcoming EU directive.

Some sectors are better prepared for the new regulations than others. Mobile phone operators, O2, Orange, Virgin and Vodafone, along with retailers such as Currys and Dixons, have already joined together to recycle their mobile phones collectively. In Holland the price of a new car now includes a charge for the recycling costs.

Further information is available on the DTI and DEFRA website under WEEE.

Radioactive Substances Act 1993

These regulations apply to the very low ionizing radiation sources used by specialized industrial contractors. The radioactive source may be sealed or unsealed. Unsealed sources are added to a liquid in order to trace the direction or rate of flow of that liquid. Sealed radioactive sources are used in radiography for the non-destructive testing of materials or in liquid level and density gauges.

This type of work is subject to the Ionizing Radiations Regulations 1999 (IRR), which impose comprehensive duties on employers to protect people at work against exposure to ionizing radiation. These regulations are enforced by the HSE, while the Radioactive Substances Act (RSA) is enforced by the Environmental Agency.

The RSA 1993 regulates the keeping, use, accumulation and disposal of radioactive waste, while the IRR 1999 regulate the working and storage conditions when using radioactive sources. The requirements of RSA 1993 are in addition to and separate from IRR 1999 for any industry using radioactive

sources. These regulations also apply to offshore installations and to work in connection with pipelines.

Dangerous Substances and Preparations and Chemicals Regulations 2000

Chemical substances that are classified as carcinogenic, mutagenic or toxic, or preparations which contain those substances, constitute a risk to the general public because they may cause cancer, genetic disorders and birth defects, respectively.

These regulations were introduced to prohibit the supply of these dangerous substances to the general public, to protect consumers from contracting fatal diseases through their use.

The regulations require that new labels be attached to the containers of these substances which identify the potential dangers and indicate that they are restricted to professional users only.

The regulations implement Commission Directive 99/43/EC, known as the 17th Amendment, which brings the whole of Europe to an agreement that these substances must not be sold to the general public, this being the only way of offering the highest level of protection for consumers.

The regulations are enforced by the Local Authority Trading Standards Department.

Noise Regulations

Before 1960 noise nuisance could only be dealt with by common law as a breach of the peace under various Acts or local by-laws. In contrast, today there are many statutes, Government circulars, British Standards and EU Directives dealing with noise matters. Environmental noise problems have been around for many years. During the eighteenth century, in the vicinity of some London hospitals, straw was put on the roads to deaden the sound of horses' hooves and the wheels of carriages. Today we have come a long way from this self-regulatory situation.

Definition

'A *statutory nuisance* must materially interfere with the enjoyment of one's dwelling. It is more than just irritating or annoying and does not take account of the undue sensitivity of the receiver'.

In the context of the Environmental Protection Act 1990, noise or vibration is a **statutory nuisance** if it is prejudicial to health or is a nuisance. However, nuisance is not defined and has exercised the minds of lawyers, magistrates and judges since the concept of nuisance was first introduced in the 1936 Public Health Act. There is a wealth of case law but a good working definition might be 'a statutory nuisance must materially interfere with the enjoyment of one's dwelling. It is more than just irritating or annoying and does not take account of the undue sensitivity of the receiver'.

The line that separates nuisance from no nuisance is very fine and non-specific. Next door's intruder alarm going off at 3 a.m. for an hour or more is clearly a statutory nuisance, whereas one going off a long way from your home would not be a nuisance. Similarly, an all night party with speakers in the garden would be a nuisance, whereas an occasional party finishing at say midnight would not be a statutory nuisance.

At Stafford Crown Court on 1 November 2004, Alton Towers, one of the country's most popular Theme Parks, was ordered by a judge to reduce noise levels from its 'white knuckle' rides. In the first judgment of its kind, the judge told the Park's

owners that neighbouring residents must not be interrupted by noise from rides such as Nemesis, Air, Corkscrew, Oblivion or from loudspeakers or fireworks.

The owners of Alton Towers, Tussauds Theme Parks Ltd, were fined the maximum sum of £5000 and served with a Noise Abatement Order for being guilty of breaching the 1990 Environmental Protection Act. Mr Richard Buxton, for the prosecution, said that the £5000 fine reflected the judge's view that Alton Towers had made little or no effort to reduce the noise nuisance.

Many nuisance complaints under the Act are domestic and are difficult to assess and investigate. Barking dogs, stereos turned up too loud, washing machines running at night to use 'low cost' electricity, television and DIY activities are all difficult to assess precisely as statutory nuisance. Similarly, sources of commercial noise complaints are also varied and commonly include deliveries of goods during the night, general factory noises, refrigeration units and noise from public houses and clubs.

Industrial noise can be complex and complaints difficult to resolve both legally and technically. Industrial noise assessment is aided by BS 4142 but no guidance exists for other noise nuisance. The Local Authority has a duty to take reasonable steps to investigate all complaints and to take appropriate action.

The Noise and Statutory Nuisance Act 1993

This Act extended the statutory nuisance provision of the Environmental Protection Act 1990 to cover noise from vehicles, machinery or equipment in the streets. The definition of equipment includes musical instruments but the most common use of this power is to deal with car alarms and house intruder alarms being activated for no apparent reason and which then continue to cause a nuisance for more than 1 hour.

In the case of a car alarm a notice is fixed to the vehicle and an officer from the Local Authority spends 1 hour trying to trace the owner with help from the police and their national computer system. If the alarm is still sounding at the end of this period, then the Local Authority Officer can break into the vehicle and silence the alarm. The vehicle must be left as secure as possible but if this cannot be done then it can be removed to a safe compound after the police have been notified. Costs can be recovered from the registered keeper.

Home intruder alarms that have been sounding for 1 hour can result in a 'Notice' being served on the occupier of the property, even if he or she is absent from the property at the time of the offence. The Notice can be served by putting it through a letterbox. A Local Authority Officer can then immediately silence the alarm without going into the property. However, these powers are *adoptive* and some Local Authorities have indicated that they will not adopt them because Sections 7–9 of the Act makes provision for incorporating the 'Code of Practice relating to Audible Intruder Alarms' into the statute. The two key points of the Code are the installation of a 20 minute cut-off of the external sounder and the notification to the police and Local Authority of two key holders who can silence the alarm.

Noise Act 1996

This Act clarifies the powers which may be taken against work which is in default under the nuisance provision of the Environmental Protection Act 1990. It provides a mechanism for permanent deprivation, return of seized equipment and charges for storage.

The Act also includes an *adoptive* provision making night time noise between 23:00 and 07:00 hours a criminal offence if the noise exceeds a certain level to be prescribed by the Secretary of State. If a Notice is not complied with, a fixed penalty may be paid instead of going to court.

Noise at Work Regulations 1989

The Noise at Work Regulations, unlike the previous vague or limited provisions, apply to all work places and require employers to carry out assessments of the noise levels within their premises and to take appropriate action where necessary. The 1989 Regulations came into force on 1 January 1990 implementing in the United Kingdom the EC Directive 86/188/EEC 'The Protection of Workers from Noise'.

Three action levels are defined by the regulations:

1. The first action level is a daily personal noise exposure of 85 dB, expressed as 85 dB(A).
2. The second action level is a daily personal noise exposure of 90 dB(A).
3. The third defined level is a peak action level of 140 dB(A) or 200 Pa of pressure which is likely to be linked to the use of cartridge operated tools, shooting guns or similar loud explosive noises. This action level is likely to be most important where workers are subjected to a small number of loud impulses during an otherwise quiet day.

Safety first

The Noise at Work Regulations are intended to reduce hearing damage caused by loud noise.

The Noise at Work Regulations are intended to reduce hearing damage caused by loud noise. So, what is a loud noise? If you cannot hear what someone is saying when they are 2 m away from you or if they have to shout to make themselves heard, then the noise level is probably above 85 dB and should be measured by a competent person.

At the first action level an employee must be provided with ear protection (ear muffs or ear plugs) on request. At the second action level the employer must reduce, so far as is reasonably practicable, other than by providing ear protection, the exposure to noise of that employee.

Hearing damage is cumulative, it builds up, leading eventually to a loss of hearing ability. Young people, in particular, should get into the routine of avoiding noise exposure before their hearing is permanently damaged. The damage can also take the form of permanent tinnitus (ringing noise in the ears) and an inability to distinguish words of similar sound such as bit and tip.

Vibration is also associated with noise. Direct vibration through vibrating floors or from vibrating tools, can lead to damage to the bones of the feet or hands. A condition known as 'vibration white finger' is caused by an impaired blood supply to the fingers, associated with vibrating hand tools.

Employers and employees should not rely too heavily on ear protectors. In practice, they reduce noise exposure far less than is often claimed, because they may be uncomfortable or inconvenient to wear. To be effective, ear protectors need to be worn all the time when in noisy places. If left off for even a short time, the best protectors cannot reduce noise exposure effectively.

Protection against noise is best achieved by controlling it at source. Wearing ear protection must be a last resort. Employers should:

- Design machinery and processes to reduce noise and vibration (mounting machines on shock absorbing materials can dampen out vibration).
- When buying new equipment, where possible, choose quiet machines. Ask the supplier to specify noise levels at the operator's working position.

- Enclose noisy machines in sound absorbing panels.
- Fit silencers on exhaust systems.
- Install motor drives in a separate room away from the operator.
- Inform workers of the noise hazard and get them to wear ear protection.
- Reduce a worker's exposure to noise by job rotation or provide a noise refuge.

New regulations introduced in 2006 reduce the first action level to 80 dB(A) and the second level to 85 dB(A) with a peak action level of 98 dB(A) or 140 Pa of pressure. Every employer must make a 'noise' assessment and provide workers with information about the risks to hearing if the noise level approaches the first action level. He must do all that is reasonably practicable to control the noise exposure of his employees and clearly mark ear protection zones. Employees must wear personal ear protection whilst in such a zone.

The EHO (Environmental Health Officer)

The responsibilities of the EHOs are concerned with reducing risks and eliminating the dangers to human health associated with the living and working environment. They are responsible for monitoring and ensuring the maintenance of standards of environmental and public health, including food safety, workplace health and safety, housing, noise, odour, industrial waste, pollution control and communicable diseases in accordance with the law. Although they have statutory powers with which to enforce the relevant regulations, the majority of their work involves advising and educating in order to implement public health policies.

The majority of EHOs are employed by Local Authorities, who are the agencies concerned with the protection of public health. Increasingly, however, officers are being employed by the private sector, particularly those concerned with food, such as large hotel chains, airlines and shipping companies.

Your Local Authority EHOs would typically have the responsibility of enforcing the environmental laws discussed above. Their typical work activities are to:

- ensure compliance with the Health and Safety at Work Act 1974, the Food Safety Act 1990 and the Environmental Protection Act 1990;
- carry out health and safety investigations, food hygiene inspections and food standards inspections;
- investigate public health complaints such as illegal dumping of rubbish, noise complaints and inspect contaminated land;
- investigate complaints from employees about their workplace and carry out accident investigations;
- investigate food poisoning outbreaks;
- obtain food samples for analysis where food is manufactured, processed or sold;
- visit housing and factory accommodation to deal with specific incidents such as vermin infestation and blocked drains;
- test recreational water, such as swimming pool water and private water supplies in rural areas;
- inspect and licence pet shops, animal boarding kennels, riding stables and zoos;
- monitor air pollution in heavy traffic areas and remove abandoned vehicles;
- work in both an advisory capacity and as enforcers of the law, educating managers of premises on issues which affect the safety of staff and members of the public.

In carrying out these duties, officers have the right to enter any workplace without giving notice, although notice may be given if they think it appropriate. They may also talk to employees, take photographs and samples and serve an Improvement Notice, detailing the work which must be carried out if they feel that there is a risk to health and safety that needs to be dealt with.

Enforcement Law Inspectors

If the laws relating to work, the environment and people are to be effective, they must be able to be enforced. The system of control under the Health and Safety at Work Act comes from the HSE or the Local Authority. Local Authorities are responsible for retail and service outlets such as shops, garages, offices, hotels, public houses and clubs. The HSE are responsible for all other work premises including the Local Authorities themselves. Both groups of inspectors have the same powers. They are allowed to:

- enter premises, accompanied by a police officer if necessary;
- examine, investigate and require the premises to be left undisturbed;
- take samples and photographs as necessary, dismantle and remove equipment;
- require the production of books or documents and information;
- seize, destroy or render harmless any substance or article;
- issue enforcement notices and initiate prosecutions.

Definition

An *improvement notice* identifies a contravention of the law and specifies a date by which the situation is to be put right.

There are two types of enforcement notices, an 'improvement notice' and a 'prohibition notice'.

An **improvement notice** identifies a contravention of the law and specifies a date by which the situation is to be put right. An appeal may be made to an Employment Tribunal within 21 days.

Definition

A *prohibition notice* is used to stop an activity which the inspector feels may lead to serious injury.

A **prohibition notice** is used to stop an activity which the inspector feels may lead to serious injury. The notice will identify which legal requirement is being contravened and the notice takes effect as soon as it is issued. An appeal may be made to the Employment Tribunal but the notice remains in place and work is stopped during the appeal process.

Cases may be heard in the Magistrates' or Crown Courts.

Magistrates' Court (Summary Offences) for health and safety offences: employers may be fined up to £20,000 and employees or individuals up to £5000. For failure to comply with an enforcement notice or a court order, anyone may be imprisoned for up to 6 months.

Crown Court (Indictable Offences) for failure to comply with an enforcement notice or a court order: fines are unlimited in the Crown Court and may result in imprisonment for up to 2 years.

Actions available to an inspector upon inspection of premises:

- Take no action – the law is being upheld.
- Give verbal advice – minor contraventions of the law identified.
- Give written advice – omissions have been identified and a follow up visit will be required to ensure that they have been corrected.
- Serve an improvement notice – a contravention of the law has, or is taking place and the situation must be remedied by a given date. A follow up visit will be required to ensure that the matter has been corrected.

- Serve a prohibition notice – an activity has been identified which may lead to serious injury. The law has been broken and the activity must stop immediately;
- Prosecute – the law has been broken and the employer prosecuted.

On any visit one or more of the above actions may be taken by the inspector.

In-house safety representatives

The HSE and the EHO are the health and safety professionals. The day that one of these inspectors arrives to look at the health and safety systems and procedures that your company has in place is a scary day! Most companies are very conscientious about their health and safety responsibilities and want to comply with the law. Many of the regulations demand that the health and safety systems and procedures are regularly reviewed and monitored and that employees are informed and appropriately trained. To meet the requirements there is a need for 'competent persons' to be appointed to the various roles within the company structure to support the company directors in their management of the Health and Safety Policy. The number of people involved, and whether health and safety is their only company role, will depend upon the size of the company and the type of work being carried out. To say that 'everyone is responsible for health and safety' is very misleading and would definitely not impress a visiting HSE inspector. There is no equality of responsibility under the law between those who provide direction and create policy and those who are employed to carry out instructions. Company directors and employers have substantially more responsibilities than employees as far as the Health and Safety at Work Act is concerned. There therefore needs to be an appropriate structure and nominated 'competent persons' within the company to manage health and safety at work.

At the top of the health and safety structure there will need to be a senior manager. Like all management functions, establishing control and maintaining it day in day out is crucial to effective health and safety management. Senior managers must take proactive responsibility for controlling issues that could lead to ill health or injury. A nominated senior manager at the top of the organization must oversee policy implementation and monitoring.

Health and safety responsibilities must then be assigned to line managers and health and safety expertise must be available to them to help them achieve the requirements of the Health and Safety at Work Act and the regulations made under the Act. The purpose of a health and safety organization within a company is to harness the collective enthusiasm, skill and effort of the whole workforce, with managers taking key responsibility and providing clear direction. The prevention of accidents and ill health through management systems of control then becomes the focus rather than looking for individuals to blame after an accident has happened. Two key personnel in this type of system might hold the job title *Safety Officer* and *Safety Representative*.

The **Safety Officer** will be the specialist member of staff, having responsibility for health and safety within the company. He or she will report to the senior manager responsible for health and safety and together they will develop strategies for implementing and maintaining the company's health and safety policies.

The Safety Officer will probably hold a health and safety qualification such as NEBOSH (National Examination Board in Occupational Safety and Health) and will:

- monitor the internal health and safety systems,
- carry out risk assessments,

Definition

The Safety Officer will be the specialist member of staff, having responsibility for health and safety within the company. He or she will report to the senior manager responsible for health and safety.

The Safety Officer will probably hold a Health and Safety qualification such as NEBOSH (National Examination Board in Occupational Safety and Health) and will:

- monitor the internal health and safety systems,
- carry out risk assessments,
- maintain accident reports and records,
- arrange or carry out in-house training,
- update systems as regulations change.

- maintain accident reports and records,
- arrange or carry out in-house training,
- update systems as regulations change.

If an accident occurs, the Safety Officer would lead the investigation, identify the cause and advise the senior manager responsible for health and safety on possible improvements to the system.

The **Safety Representative** will be the person who represents a small section of the workforce on the Safety Committee. The role of the Safety Representative will be to bring to the Safety Committee the health and safety concerns of colleagues and to take back to colleagues information from the Committee. The office of Safety Representative is often held by the trade union representative, since it is a similar role, representing colleagues on management committees. If the company does not have a Safety Committee then the Safety Representative will liaise with the Safety Officer, informing him of the training and other health and safety requirements of colleagues.

Definition

The Safety Representative will be the person who represents a small section of the workforce on the Safety Committee. The role of the Safety Representative will be to bring to the Safety Committee the health and safety concerns of colleagues and to take back to colleagues information from the Committee.

The Safety Officer and Safety Representative hold important positions within a company, informing both employers and employees on health and safety matters and helping the company meet its obligation to 'consult with employees' under the Health and Safety Regulations.

Regular monitoring and reviewing of systems and procedures is an essential part of any health and safety system. Similarly, monitoring and evaluating systems systematically is an essential part of many quality management systems. In Chapter 3 we will look at quality systems.

Try this

Safety Officer

- Is there someone in your company responsible for safety?
- What is his name?
- What does he do?

Environmental technology systems and renewable energy

Energy is vital to the modern industrial economy in the UK and Europe. We also need energy in almost every aspect of our lives, to heat and light our homes and offices, to enable us to travel on business or for pleasure, and to power our business and industrial machines.

In the past the UK has benefited from its fossil fuel resources of coal oil and gas but respectable scientific sources indicate that the fossil fuel era is drawing to a close. Popular estimates suggest that gas and oil will reach peak production in the year 2060 with British coal reserves lasting only a little longer. Therefore we must look to different ways of generating electricity so that:

- the remaining fossil fuel is conserved
- our CO_2 emissions are reduced to avoid the consequences of climate change
- we ensure that our energy supplies are secure, and not dependent upon supplies from other countries.

Following the introduction of the Climate Change Act in 2008 the UK and other Member States agreed an EU wide target of 20% renewable energy by the year

2020 and 60% by 2050. Meeting these targets will mean basing much of the new energy infrastructure around renewable energy, particularly offshore wind power.

The 'Energy Hierarchy' states that organizations and individuals should address energy issues in the following order so as to achieve the agreed targets.

1. Reduce the need for energy – reducing energy demand is cost saving, reduces greenhouse gas emissions and contributes to the security of supply. Reducing the energy loss from buildings by better insulation and switching off equipment when not in use is one way of achieving this target.
2. Use energy more efficiently – use energy efficient lamps and 'A' rated equipment.
3. Use renewable energy – renewable energy refers to the energy that occurs naturally and repeatedly in the environment. This energy may come from wind waves or water, the sun or heat from the ground or air.
4. Any continuing use of fossil fuels should use clean and efficient technology. Power stations generating electricity from coal and oil (fossil fuel) release a lot of CO_2 in the generating process. New build power stations must now be fitted with carbon capture filters to reduce the bad environmental effects.

Funding for environmental technology systems

Renewable energy is no less reliable than energy generated from more traditional sources. Using renewable energy does not mean that you have to change your lifestyle or your domestic appliances. There has never been a better time to consider generating energy from renewable technology than now because grants and funding are available to help individuals and companies.

Key fact

Renewable energy is no less reliable than energy generated from more traditional sources.

The Low Carbon Building Programme implemented by the Department of Energy and Climate Change (DECC) provides grants toward the installation of renewable technologies and is available to householders, public non-profit making organizations and commercial organizations across the UK.

The government's 'Feed in Tariff' pays a tax free sum which is guaranteed for 25 years. It is called 'Clean energy cash back' and has been introduced to promote the uptake of small scale renewable and low carbon electricity generation technologies. The customer receives a generation tariff from the electricity supplier, whether or not any electricity generated is exported to the national grid, and an additional export tariff when electricity is transported to the electricity grid through a smart meter.

Key fact

The government's 'Feed in Tariff' pays a tax free sum which is guaranteed for 25 years.

From April 2010, clean energy generators will be paid 41.3p for each kWh of electricity generated. Surplus energy fed back into the national grid earns an extra 3p per unit. If you add to this the electricity bill savings, a normal householder could be £1000 per year better off. Savings vary according to energy use and type of system used. The Energy Saving Trust at www.energysavingtrust.org.uk (telephone number 01752 823600) and www.britishgas.co.uk and Ofgem at www.ofgem.gov.uk/fits provide an on line calculator to determine the cost, size of system and CO_2 savings for PV systems.

Micro-generation technologies

Microgeneration is defined in The Energy Act 2004 Section 82 as the generation of heat energy up to 45 kW and electricity up to 50 kW.

Today, micro-generation systems generate relatively small amounts of energy at the site of a domestic or commercial building. However, it is estimated that by

2050, 30 to 40 per cent of the UKs electricity demand could be met by installing micro-generation equipment to all types of building.

In the USA, the EU and the UK buildings consume more than 70% of the nations' electricity and contribute almost 40% of the polluting CO_2 greenhouse gases. Any reductions which can be made to these figures will be good for the planet, and hence the great interest today in the micro-generation systems. Micro-generation technologies include small wind turbines, solar photovoltaic (PV) systems, small scale hydro and micro CHP (combined heat and power) systems. Micro-generators that produce electricity may be used as stand alone systems, or may be run in parallel with the low voltage distribution network, that is, the a.c. mains supply.

Key fact

Micro-generation technologies include small wind turbines, solar photovoltaic (PV) systems, small scale hydro and micro CHP (combined heat and power) systems.

The April 2008 amendments to the Town and Country Planning Act 1990 now allow the installation of micro-generation systems within the boundary of domestic premises without obtaining planning permission. However, size limitations have been set to reduce the impact upon neighbours. For example, solar panels attached to a building must not protrude more than 200 mm from the roof slope, and stand alone panels must be no higher than four metres above ground level and no nearer than five metres from the property boundary. See the Electrical Safety Council site for advice on connecting micro-generation systems at www.esc.org.uk/bestpracticeguides.html

Smart electricity meters

Smart electricity meters are designed to be used in conjunction with micro-generators. Electricity generated by the consumer's micro-generator can be sold back to the energy supplier using the 'smart' two-way meter.

Key fact

Smart electricity meters are designed to be used in conjunction with micro-generators.

The Department for Energy and Climate Change are planning to introduce smart meters into consumers homes from 2012 and this is expected to run through until 2020 with the aim being to help consumers reduce their energy bills.

When introducing the proposal Ed Miliband, the Energy and Climate Change Secretary, said 'the meters which most of us have in our homes were designed for a different age, before climate change. Now we need to get smarter with our energy. This is a big project affecting 26 million homes and several million businesses. The project will lead to extra work for electrical contractors through installing the meters on behalf of the utility companies and implementing more energy efficient devices once customers can see how much energy they are using'.

Already available is the Real Time Display (RTD) wireless monitor which enables consumers to see exactly how many units of electricity they are using through an easy to read portable display unit. By seeing the immediate impact in pence per hour of replacing existing lamps with low energy ones or switching off unnecessary devices throughout the home or office, consumers are naturally motivated to consider saving energy. RTD monitors use a clip-on sensor on the meter tails and includes desk top software for PC and USB links.

Let us now look at some of these micro-generation technologies.

Definition

A *solar photovoltaic* (PV) system is a collection of PV cells known as a PV string, that forms a PV array and collectively are called a PV generator which turns sunlight directly into electricity.

Solar photovoltaic (PV) power supply systems

A **solar photovoltaic** (PV) system is a collection of PV cells known as a PV string, that forms a PV array and collectively are called a PV generator which turns sunlight directly into electricity. PV systems may be 'stand alone' power

supplies or be designed to operate in parallel with the public low voltage distribution network, that is, the a.c. mains supply.

Stand alone PV systems are typically a small PV panel of maybe 300 mm by 300 mm tilted to face the southern sky, where it receives the maximum amount of sunlight. They typically generate 12 to 15 volts and are used to charge battery supplies on boats, weather stations, road signs and any situation where electronic equipment is used in remote areas away from a reliable electrical supply.

The developing nations are beginning to see stand alone PV systems as the way forward for electrification of rural areas beyond the National Grid rather than continuing with expensive diesel generators and polluting kerosine lamps.

The cost of PV generators is falling. The period 2009 to 2010 saw PV cells fall by 30% and with new 'thin-film' cells being developed, the cost is expected to continue downwards. In the rural areas of the developing nations they see PV systems linked to batteries bringing information technology, radio and television to community schools. This will give knowledge and information to the next generation which will help these countries to develop a better economy, a better way of life and to have a voice in the developed world.

Stand alone systems are not connected to the electricity supply system and are therefore exempt from much of BS 7671, the IEE Regulations. However, Regulation 134.1.1 'good workmanship by competent persons and proper materials shall be used in all electrical installations' will apply to any work done by an electrician who must also pay careful attention to the manufacturer's installation instructions.

Solar photovoltaic (PV) systems designed to operate in parallel with the public low voltage distribution network are the type of micro-generator used on commercial and domestic buildings. The PV cells operate in exactly the same way as the stand alone system described above, but will cover a much greater area. The PV cells are available in square panels which are clipped together and laid over the existing roof tiles as shown in Fig. 2.1, or the PV cells may be manufactured to look just like the existing roof tiles which are integrated into the existing roof.

Figure 2.1 Photo of PV system in a domestic situation.

A solar PV system for a domestic three bedroom house will require approximately 15 to 20 square metres generating two to three kilowatts of power and the cost at the time of going to press of the PV cells alone will be in the region of £10,000 to £12,000, although grants are available. On the positive side, a PV system for a three bedroom house will save around 1,200 kg of CO_2 per year.

These bigger micro-generation systems are designed to be connected to the power supply system and the installation must therefore comply with Section 712 of BS 7671: 2008. Section 712 contains the requirements for protective measures comprising automatic disconnection of the supply wiring systems, isolation, switching and control, earthing arrangements and labelling. In addition the installation must meet the requirements of the Electricity Safety Quality and Continuity Regulations 2006. This is a mandatory requirement. However, where the output does not exceed 16A per line, they are exempt from some of the requirements providing that:

- the equipment is type tested and approved by a recognized body
- the installation complies with the requirements of BS 7671, the IEE Regulations
- the PV equipment must disconnect from the distributor's network in the event of a network fault
- the distributor must be advised of the installation before or at the time of commissioning.

Installations of less than 16A per phase but up to 5 kilowatt peak (kWp) will also be required to meet the requirements of the Energy Network Association's Engineering Recommendation G83/1 for small scale embedded generators in parallel with public low voltage distribution networks. Installations generating more than 16A must meet the requirements of G59/1 which requires approval from the distributor before any work commences.

Definition

Solar thermal hot water heating systems are recognized as a reliable way to use the energy of the sun to heat water.

Solar thermal hot water heating

Solar thermal hot water heating systems are recognized as a reliable way to use the energy of the sun to heat water. The technology is straightforward and solar thermal panels for a three bedroom house cost at the time of going to press between £3000 and £6000 for a 3 to 6 m^2 panel and they will save about 260 kg of CO_2 annually.

The solar panel comprises a series of tubes containing water that is pumped around the panel and a heat exchanger in the domestic water cylinder as shown in Fig. 2.2. Solar energy heats up the domestic hot water. A solar panel of about 4 m^2 will deliver about 1000 kWh per year which is about half the annual water demand of a domestic dwelling. However, most of the heat energy is generated during the summer and so it is necessary to supplement the solar system with a boiler in the winter months. Fig. 2.3 shows a photo of an installed solar hot water panel.

If you travel to Germany, you will see a lot of photovoltaic and solar thermal panels on the roofs there. In the UK, planning requirements for solar thermal and PV installations have already been made much easier. A website detailing planning requirements for solar and wind can be found at www.planningportal.gov.uk/uploads/hhghouseguide.html

Wind energy generation

Modern large scale wind machines are very different from the traditional windmill of the last century which gave no more power than a small car engine. Very large

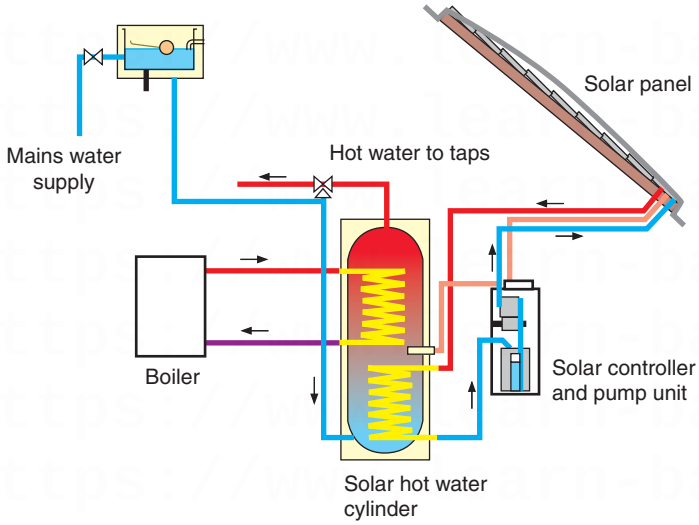

Figure 2.2 Solar-powered hot water system.

Figure 2.3 Photo of a solar hot water panel.

structures are needed to extract worthwhile amounts of energy from the wind. Modern large scale wind generators are taller than electricity pylons, with a three blade aeroplane type propeller to catch the wind and turn the generator. If a wind turbine was laid down on the ground, it would be longer and wider than a football pitch. They are usually sited together in groups in what has become known as 'wind energy farms' as shown in Fig. 2.4.

Each modern grid connected wind turbine generates about 600 kW of electricity. A wind energy farm of 20 generators will therefore generate 12 MW, a useful contribution to the national grid, using a naturally occurring, renewable, non-polluting source of energy. The Department of Energy and Climate Change considers wind energy to be the most promising of the renewable energy sources.

Figure 2.4 Wind farm energy generators.

In 2010 there were 253 wind energy farms in operation in the UK with 12 operating offshore. The 3000 turbines on these farms have the capacity to generate 4,600 MW of electricity, enough for 2.5 million homes. There are a further 500 wind energy farms planned or in construction. However, because of the unpredictable nature of the wind, and inefficiencies in the generation process, the amount of power produced will be less than the installed capacity.

The Countryside Commission, the government's adviser on land use, has calculated that to achieve a target of generating 10% of the total electricity supply by wind power will require 40,000 generators of the present size. At the time of writing, 2010, we are generating only about 2.5% of the total electricity supply from wind power and all hopes are pinned on large offshore wind farms to achieve the government and EU targets for 2020.

Definition

Wind power is an endless renewable source of energy, is safer than nuclear power and provides none of the polluting emissions associated with fossil fuel.

Wind power is an endless renewable source of energy, is safer than nuclear power and provides none of the polluting emissions associated with fossil fuel. If there was such a thing as a morally pure form of energy, then wind energy would be it. However, wind farms are, by necessity, sited in some of the most beautiful landscapes in the UK. Building wind energy farms in these areas of outstanding natural beauty has outraged conservationists. Prince Charles has reluctantly joined the debate saying that he was in favour of renewable energy sources but believed that 'wind farms are an horrendous blot on the landscape'. He believes that if they are to be built at all they should be constructed well out to sea.

The next generation of wind farms will mostly be built offshore, and this is the place to build them, where there is more space and more wind, but the proposed size of these turbines creates considerable engineering problems. From the sea bed foundations to the top of the turbine blade will be up to a staggering 250 metres, three times the height of the Statue of Liberty. Each offshore turbine, generating between 5 and 7 MW, will weigh between 200 and 300 tonnes. When you put large wind forces onto that structure you will create a very big cantilever effect which creates a major engineering challenge.

Figure 2.5 Small wind generator on a domestic property.

The world's largest offshore wind energy farm built so far was opened in September 2010. The 100 turbine 'Thanet' wind farm just off the Kent coast will generate enough power to supply 200,000 homes. The Thanet project cost £780 million pounds to build. The turbines are up to 380 feet high and cover an area as large as 4000 football pitches. The Thanet project will not retain its title as the world's largest wind farm for long because the 'Greater Gabbard' wind farm, off the north-east coast and having 140 turbines' is due to open in late 2010. The Thanet project brings Britain's total wind energy capacity above 5,000 megawatts for the first time.

The Department of Energy and Climate Change has calculated that 10,000 wind turbines could provide the energy equivalent of 8 million tonnes of coal per year and reduce CO_2 emissions. While this is a worthwhile saving of fossil fuel, opponents point out the obvious disadvantages of wind machines, among them the need to maintain the energy supply during periods of calm means that wind machines can only ever supplement a more conventional electricity supply.

Small wind micro-generators can be used to make a useful contribution to a domestic property or a commercial building. They can be stand alone about the size of a tall street lamp. A 12 m high turbine costs about £24,000 and, with a good wind, will generate 10,000 kWh per year. However, if you live in a village, town or city you are unlikely to obtain the the Local Authority Building and Planning permissions to install a wind generator because your neighbours will object.

Small wind generators of the type shown in Fig. 2.5 typically generate between 1.5A and 15A in wind speeds of 10 mph to 40 mph.

Key fact

The Department of Energy and Climate Change has calculated that 10,000 wind turbines could provide the energy equivalent of 8 million tonnes of coal per year and reduce CO_2 emissions.

Heat pumps

In applications where heat must be upgraded to a higher temperature so that it can be usefully employed, a heat pump must be used. Energy from a low

Definition

In applications where heat must be upgraded to a higher temperature so that it can be usefully employed, a heat pump must be used.

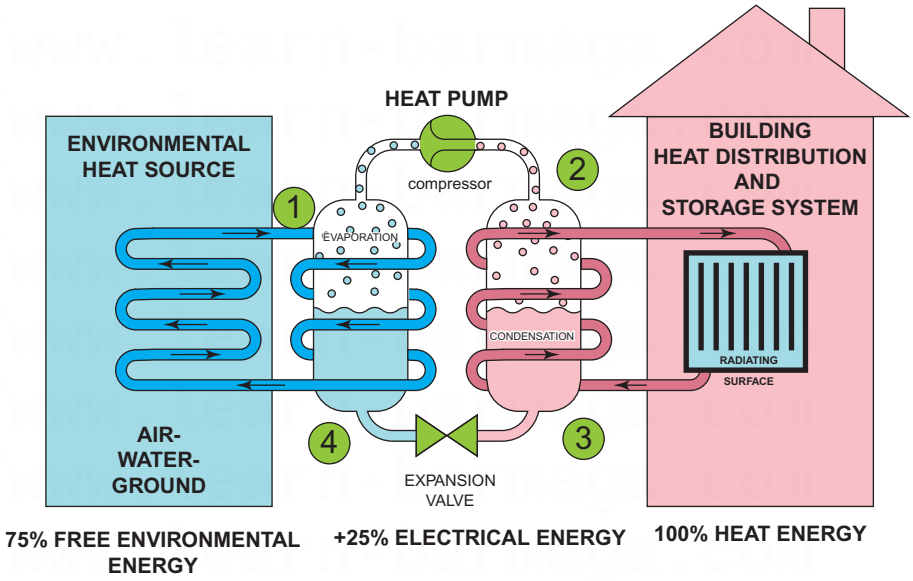

Figure 2.6 Heat pump working principle.

temperature source such as the earth, the air, a lake or river is absorbed by a gas or liquid contained in pipes, which is then mechanically compressed by an electric pump to produce a temperature increase. The high temperature energy is then transferred to a heat exchanger so that it might do useful work, such as providing heat to a building. For every 1 kWh of electricity used to power the heat pump compressor, approximately three to four kWh of heating are produced.

How a heat pump works

1. A large quantity of low grade energy is absorbed from the environment and transferred to the refrigerant inside the heat pump (called the evaporator). This causes the refrigerant temperature to rise, causing it to change from liquid to a gas.
2. The refrigerant is then compressed, using an electrically driven compressor, reducing its volume but causing its temperature to rise significantly.
3. A heat exchanger (condenser) extracts the heat from the refrigerant to heat the domestic hot water or heating system.
4. After giving up its heat energy, the refrigerant turns back into a liquid, and, after passing through an expansion valve, is once more ready to absorb energy from the environment and the cycle is repeated as shown in Fig. 2.6.

A refrigerator works on this principle. Heat is taken out of the food cabinet, compressed and passed on to the heat exchanger or radiator at the back of the fridge. This warm air then radiates by air convection currents into the room. Thus the heat from inside the cabinet is moved into the room leaving the sealed refrigerator cabinet cold.

Definition

Ground source heat pumps extract heat from the ground by circulating a fluid through polythene pipes buried in the ground in trenches or in vertical bore holes.

Heat pumps (ground source)

Ground source heat pumps extract heat from the ground by circulating a fluid through polythene pipes buried in the ground in trenches or in vertical bore holes as shown in Fig. 2.7. The fluid in the pipes extracts heat from the ground and a heat exchanger within the pump extracts heat from the fluid. These systems are most effectively used to provide underfloor radiant heating or water heating.

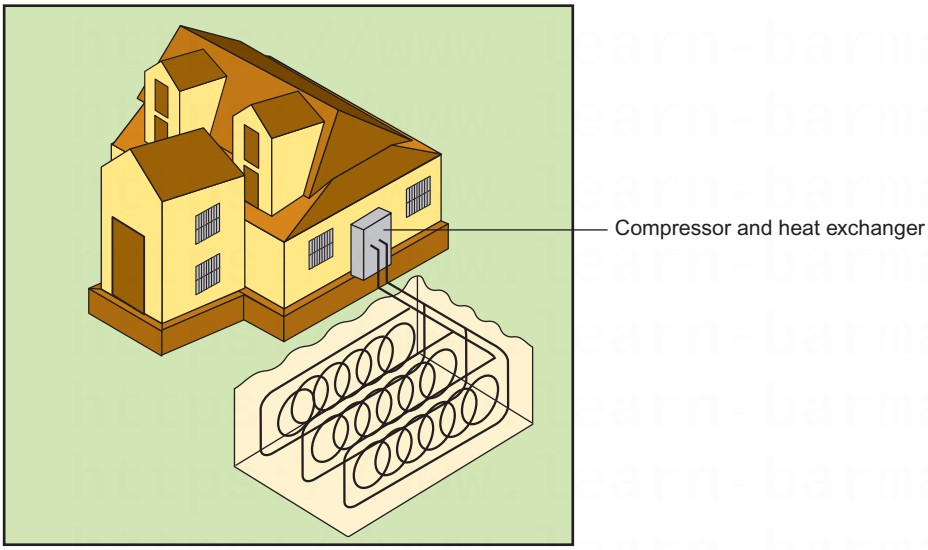

Figure 2.7 Ground source heating system.

Calculations show that the length of pipe buried at a depth of 1.5 m required to produce 1.2 kW of heat will vary between 150 m in dry soil and 50 m in wet soil. The average heat output can be taken as 28 watts per metre of pipe. A rule of thumb guideline is that the surface area required for the ground heat exchanger should be about 2.5 times the area of the building to be heated.

This type of installation is only suitable for a new build project and the ground heat exchanger will require considerable excavation and installation. The installer must seek Local Authority Building Control permissions before work commences.

Heat pumps (air source)

The performance and economics of heat pumps are largely determined by the temperature of the heat source and so we seek to use a high temperature source. The heat sources used by heat pumps may be soil, the air, ground or surface water. Unfortunately all these sources follow the external temperature, being lower in winter when demand is highest. Normal atmosphere is an ideal heat source in that it can supply an almost unlimited amount of heat although unfortunately at varying temperatures, but relatively mild winter temperatures in the UK mean excellent levels of efficiency and performance throughout the year. For every 1 kWh of electricity used to power the heat pump compressor, between 3 and 4 kWh of heating energy is produced. They also have the advantage over ground source heat pumps of lower installation costs because they do not require any groundwork. Figure 2.8 shows a commercial air sourced heat pump.

If the air heat pump is designed to provide full heating with an outside temperature of two to four degrees centigrade, then the heat pump will provide approximately 80% of the total heating requirement with high performance and efficiency.

The point at which the output of a given heat pump meets the building heat demand is known as the ‘balance point’. In the example described above, the 20% shortfall of heating capacity below the balance point must be provided by some supplementary heat. However, an air to air heat pump can also be

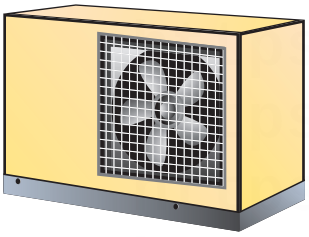

Figure 2.8 Air sourced heat pump unit.

operated in the reverse cycle which then acts as a cooling device, discharging cold air into the building during the summer months. So here we have a system which could be used for air conditioning in a commercial building.

Hydroelectric power generation

The UK is a small island surrounded by water. Surely we could harness some of the energy contained in tides, waves, lakes and rivers? Many different schemes have been considered in the past 20 years and a dozen or more experimental schemes are being tested now.

Water power makes a useful contribution to the energy needs of Scotland but the possibility of building similar hydroelectric schemes in England are unlikely chiefly due to the topographical nature of the country.

The Severn Estuary has a tidal range of 15 m, the largest in Europe, and a reasonable shape for building a dam across the estuary. This would allow the basin to fill with water as the tide rose, and then allow the impounded water to flow out through electricity generating turbines as the tide falls. However, such a tidal barrier might have disastrous ecological consequences upon the many wildfowl and wading bird species by the submerging of the mudflats which now provide winter shelter for these birds. Therefore, the value of the power which might be produced must be balanced against the possible ecological consequences.

France has successfully operated a 240 MW tidal power station at Rance in Brittany for the past 25 years.

Marine Current Turbines Ltd are carrying out research and development on submerged turbines which will rotate by exploiting the principle of flowing water in general and tidal streams in particular. The general principle is that an 11 m diameter water turbine is lowered into the sea down a steel column drilled in the sea bed. The tidal movement of the water then rotates the turbine and generates electricity.

The prototype machines were submerged in the sea off Lynmouth in Devon. In May 2008 they installed the world's first tidal turbine in the Strangford Narrows in Northern Island where it is now grid connected and generating 1.2 MW.

All the above technologies are geared to providing hydroelectric power connected to the national grid, but other micro-hydro schemes are at the planning and development stage.

Key fact

Green electricity producers are paid a premium to produce electricity from renewable sources.

Micro-hydro generation

The use of small hydropower (SHP) or micro-hydropower has grown over recent decades led by continuous technical developments, brought about partly in the UK by the 2010 coalition government's 'feed in tariff' where green electricity producers are paid a premium to produce electricity from renewable sources.

Key fact

The normal perception of hydropower is of huge dams, but there is a much bigger use of hydropower in smaller installations.

The normal perception of hydro-power is of huge dams, but there is a much bigger use of hydro-power in smaller installations. Asia, and especially China, is set to become a leader in hydroelectric generation. Australia and New Zealand are focusing on small hydro plants. Canada, a country with a long tradition of hydropower, is developing small hydropower as a replacement for expensive diesel generation in remote off-grid communities.

Small hydropower schemes generate electricity by converting the power available in rivers, canals and streams. The object of a hydropower scheme is to convert the potential energy of a mass of water flowing in a stream with a certain fall, called the head, into electrical energy at the lower end of the stream where the powerhouse is located. The power generated is proportional to the flow, called the discharge, and to the head of water available. The fundamental asset of hydropower is that it is a clean and a renewable energy source and the fuel used, water, is not consumed in the electricity generating process.

Definition

Small hydropower schemes generate electricity by converting the power available in rivers, canals and streams.

In the Derbyshire Peak District along the fast flowing River Goyt there were once sixteen textile mills driven by water wheels. The last textile mill closed in the year 2000 but the Old Torr Mill has been saved. Where once the water wheel stood is now a gigantic 12 tonne steel screw, 2.4 metre in diameter. The water now drives the Reverse Archimedian Screw, affectionately called 'Archie', to produce enough electricity for 70 homes. The electricity generating project is owned by the residents of New Mills in a sharing co-operative in which surplus electricity is sold back to the grid. Archie will produce 250 MWh of electricity each year and the installation cost was £300,000 in 2008. See Figure 2.9.

Figure 2.9 An example of an Archimedian screw at the River Dart country park, Devon.
Credit: WRE Limited.

In July 2010 The Lake District National Park Authority granted permission for a water turbine to be built on a 350 m long stretch of the fast flowing River Kent. Approximately 1225 MWh of electricity will be generated each year, enough to power 250 homes. The project will cost £1.6 M funded by grants and loans and completion is anticipated in late 2011 or early 2012. The Kentmere Hydro Project is a community project and the power generated will be fed back to the national grid. The Trust will receive money from the government's clean energy cash back scheme which it will use to pay back the construction loans, leaving a surplus which will be used to support local projects in this small Lakeland community.

Key fact

The type of turbine chosen for any hydro scheme will depend upon the discharge rate of the water and the head of water available.

The type of turbine chosen for any hydro scheme will depend upon the discharge rate of the water and the head of water available. A Pelton Wheel is a water turbine in which specially shaped buckets attached to the periphery of the wheel are struck by a jet of water. The kinetic energy of the water turns the wheel which is coupled to the generator.

Axial turbines comprise a large cylinder in which a propeller type water turbine is fixed at its centre. The water moving through the cylinder causes the turbine blade to rotate and generate electricity.

A Francis Turbine or Kaplan Turbine is also an axial turbine but the pitch of the blades can be varied according to the load and discharge rate of the water.

Small water turbines will reach a mechanical efficiency at the coupling of 90%.

Up and down the country, riverside communities must be looking at the relics of our industrial past and wondering if they might provide a modern solution for clean, green, electrical energy. However, despite the many successes and obvious potential, there are many barriers to using waterways for electricity generation in the European countries. It is very difficult in this country to obtain permission from the Waterways Commission to extract water from rivers, even though once the water has passed through the turbine, it is put back into the river. Environmental pressure groups are opposed to micro-hydro generation because of its perceived local environmental impact on the river ecosystem and the disturbance to fishing. Therefore, once again, the value of the power produced would have to be balanced against the possible consequences.

Combined heat and power (CHP)

Definition

CHP is the simultaneous generation of usable heat and power in a single process. That is, heat is produced as a by-product of the power generation process.

CHP is the simultaneous generation of usable heat and power in a single process. That is, heat is produced as a by-product of the power generation process. A chemical manufacturing company close to where I live has a small power station which meets some of their electricity requirements using the smart meter principle. Their 100 MW turbine is driven by high pressure steam. When the steam condenses after giving up its energy to the turbine, there remains a lot of very hot water which is then piped around the offices and some production plant buildings for space heating. Combining heat and power in this way can increase the overall efficiency of the fuel used because it is performing two operations.

CHP can also use the heat from incinerating refuse to heat a nearby hospital, school or block of flats.

Biomass heating

Definition

Biomass is derived from plant materials and animal waste. It can be used to generate heat and to produce fuel for transportation.

Biomass is derived from plant materials and animal waste. It can be used to generate heat and to produce fuel for transportation. The biomass material may be straw and crop residues, crops grown specially for energy production, or rape seed oil and waste from a range of sources including food production. The nature of the fuel will determine the way that energy can best be recovered from it.

Definition

'Biomass renewables', that is, energy from crops.

There is a great deal of scientific research being carried out at the moment into 'biomass renewables', that is, energy from crops. This area of research is at an early stage, but is expected to flourish in the next decade. The first renewable energy plant, which is to be located at Teesport on the River Tees in the north-east of England, has received approval from the Department for Energy and Climate Change for building to commence.

The facility will be one of the largest biomass plants to be built in the world and is scheduled to enter commercial operation in late 2012. Young trees will be grown as a crop to produce wood chips. The plant will use 2.5 million tonnes of wood chips each year to produce 300 MW of electrical energy. The plant will operate 24 hours a day, all year round to meet some of the national grid base load.

Water conservation

Definition

Conservation is the preservation of something important, especially of the natural environment.

Conservation is the preservation of something important, especially of the natural environment. Available stored water is a scarce resource in England and Wales where there is only 1400 cubic meters per person per year. Very little compared with France, which has 3100 cubic meters per person per year, Italy which has 2900 and Spain 2800. About a half of the water used by an average home is used to shower, bathe and wash the laundry, another third is used to flush the toilet.

At a time when most domestic and commercial properties have water meters installed it saves money to harvest and re-use water.

The City and Guilds has asked us to look at two methods of water conservation: rain-water harvesting and grey water recycling.

Rain-water harvesting

Rain-water harvesting is the collection and storage of rain-water for future use. Rainwater has in the past been used for drinking, water for livestock and water for irrigation. It is now also being used to provide water for car cleaning and garden irrigation in domestic and commercial buildings.

Definition

Rainwater harvesting is the collection and storage of rainwater for future use.

Many gardeners already harvest rain-water for garden use by collecting run off from a roof or greenhouse and storing it in a water butt or water barrel. However, a 200 litre water butt does not give much drought protection although garden plants much prefer rain-water to fluoridated tap water. To make a useful contribution the rain-water storage tank should be between 2,000 and 7,000 litre capacity. The rain-water collecting surfaces will be the roof of the building and any hard paved surfaces such as patios. Downpipes and drainage pipes then route the water to the storage tank situated, perhaps, under the lawn. An electric pump lifts the water from the storage tank to the point of use, possibly a dedicated outdoor tap. The water is then distributed through a hose pipe or sprinkler system to the garden in the normal way.

With a little extra investment, rain-water can be filtered and used inside the house to supply washing machines and WCs. Installing domestic pipes and interior plumbing can be added to existing homes although it is more straightforward in a new build home.

With the move toward more sustainable homes UK architects are becoming more likely to specify rain-water harvesting in their design to support alternatives to a mains water supply. In Germany rain-water harvesting systems are now installed as standard in all new commercial buildings.

Grey water recycling

Grey water is tap water which has already performed one operation and is then made available to be used again instead of flushing it down the drain. Grey water recycling offers a way of getting double the use out of the world's most precious resource.

Definition

Grey water is tap water which has already performed one operation and is then made available to be used again instead of flushing it down the drain.

There are many products on the market such as the BRAC system which takes in water used in the shower, bath and laundry, cleans it by filtering and then reuses it for toilet flushing. It is only a matter of routeing the grey waste water drain pipe from the bath, shower and laundry to the filter unit and then plumbing the sanitized grey water to the toilet tank.

These systems are easy to install, particularly in a new build property. It is only a matter of re-routeing the drain pipes. Another option for your grey water is to route it into the rainwater storage tank for further use in the garden.

Water Regulations 1999

Water supply and installations in England and Wales are controlled by the Water Regulations known as the Water Supply (Water Fittings) Regulations 1999 which came into force on 1 July 1999. Separate arrangements apply to Scotland and Ireland.

Definition

The water that finds its way to our taps is derived from rainfall and the treatment of that water depends upon where it is sourced from and the impurities it contains.

The water that finds its way to our taps is derived from rainfall and the treatment of that water depends upon where it is sourced from and the impurities it contains. Water sourced from springs and wells is naturally purified and needs little disinfection. The quality of the water from reservoirs and rivers, called raw water, will determine the level of treatment. This usually involves several stages of treatment including settling, filtering and a final 'polishing' with carbon grains to remove minute traces of impurities and to improve the water taste. Water suppliers store water either in its raw state in impounding reservoirs or lakes, or as treated wholesome water in service reservoirs.

After being treated, water is distributed from the water supplier to individual consumers through a network of pipes known as 'mains'. The mains belong to the water suppliers and it is their responsibility to maintain them in a way that will conserve this important resource. The local mains provide the final leg of the journey to our homes.

The water at our taps is of the very highest quality and it seems a little irresponsible to flush it down the drains without giving some consideration to water conservation.

Energy saving legislation

Key fact

In April 2006, Part L of the Building Regulations (England and Wales) was revised in order to raise energy performance standards and to reduce CO_2 emissions from buildings.

In April 2006, Part L of the Building Regulations (England and Wales) was revised in order to raise energy performance standards and to reduce CO_2 emissions from buildings. Part L, Conservation of Fuel and Power, now requires all new and existing buildings to be given an energy rating and for all new buildings to meet a minimum level of energy efficiency. Under this provision the electrical contractor must make 'reasonable provision' to provide lighting systems with energy efficient lamps and sufficient controls so that electrical energy can be used efficiently. The current provision requires one energy efficient luminaire for every 25 m^2 of floor area or one energy efficient luminaire for every four fixed luminaires.

External lighting fixed to the building, including lighting in porches, but not garages or car ports, should provide reasonable provision for energy efficient lamps such as fluorescent tubes or CFLs. These lamps should automatically extinguish in daylight and when not required at night, being controlled by passive infra-red (PIR) detectors.

The traditional carbon filament lamp, called a GLS (general lighting service) lamp, is hopelessly bad in energy efficient terms, producing only 14 lumens of light output for every electrical watt input. Fluorescent tubes and CFLs produce more than 40 lumens of light output for every electrical watt input.

In addition, the electrical installer must have an appreciation of how the building regulations in general might affect the electrical installation in particular. For example:

- Part A Structure – the basic requirement for those installing electrical installations in a building is not to cut, drill, chase, penetrate or in any way interfere with the structure so as to cause significant reduction in its load bearing capability. Approved document A provides practical guidance with pictures. This document can be found in the Electricians Guide to the Building Regulations published by the IEE.
- Part B Fire Safety – the 'standard house' with no floor area exceeding 200 m must be fitted with smoke alarms to each level. If the kitchen cannot be isolated from the other rooms by a door, then a compatible interlinked heat detector must also be installed in the kitchen.

- Part M Access and Facilities for the Disabled – this requires switches and socket outlets in dwellings to be installed so that all persons, including those whose reach is limited, can easily reach them. The recommendation is that they should be installed in habitable rooms at a height of between 450 and 1200 mm from the finished floor level as shown in the Electricians Guide to the Building Regulations.

The important changes in the 2006 regulations is that compliance is now based upon the the whole building's carbon emissions, meaning that the building designer must now consider the impact of both the constructional elements of the building as well as the energy using services within the building such as lighting, heating, hot water and ventilation.

To achieve compliance, the building designer must show that the predicted annual carbon emissions from the building are less than, or equal to, a Target Carbon Emissions Rate for a 'standard national building' of the same floor area and shape as the one being designed.

Code for sustainable homes

The use of energy to provide heat for central heating and hot water in our homes is responsible for 60% of a typical family's energy bill. Heating accounts for over half of Britain's entire use of energy and carbon emissions. If Britain is to reduce its carbon footprint and achieve energy security, we must revolutionize the way we keep warm in the home.

Key fact

Heating accounts for over half of Britain's entire use of energy and carbon emissions.

At present 69% of our home heating comes from burning gas, 11% from oil, 3% from solid fuels such as coal and 14% from electricity which is mainly generated from these same three fossil fuels. Only 1% is currently provided by renewable sources. If Britain is to meet its clean energy targets, renewable sources will have to increase, and the revolution will have to start in the home because the country's dwellings currently provide more than half of the total demand, almost entirely for hot water and central heating.

There are about 20 million homes in the UK and a review of present buildings has found that about six million homes have inadequately lagged lofts, eight million have uninsulated cavity walls and a further seven million homes with solid walls would benefit from better insulation. If the country is to achieve its 2016 reduced carbon emissions targets, these existing homes must be heavily insulated to reduce energy demand and then supplied with renewable heat.

We cannot sustain the present level of carbon emissions without disastrous ecological consequences in the future. Low carbon homes are sustainable homes.

HRH The Prince of Wales has entered the debate saying 'becoming more sustainable is possibly the greatest challenge humanity has faced and I am convinced that it is therefore, the most remarkable chance to secure a prosperous future for everyone. We must strive harder than ever before to convince people that by living sustainably we will improve our quality of life and our health; that by living in harmony with nature we will protect the intricate, delicate balance of the natural systems that ultimately sustain us' (*Daily Telegraph*, 31.07.2010).

Definition

The Code for Sustainable Homes see, Fig. 2.9, measures the sustainability of a home against categories of sustainable design, rating the whole home as a complete package, including building materials and services within the building.

The Code for Sustainable Homes, see Fig. 2.10, measures the sustainability of a home against categories of sustainable design, rating the whole home as a complete package, including building materials and services within the building. The Code uses a 1 to 6 star rating to communicate the overall sustainability performance of a new home and sets minimum standards for energy and water use at each level.

Date	2010	2013	2016
Energy efficiency improvement of the dwelling campared to 2006 (part L Building Regulations)	2.5%	44%	Zero carbon
Equivalent Standard within the Code	Code level 3	Code level 4	Code level 6

Figure 2.10 Code for Sustainable Homes.

Since May 2008 all new homes are required to have a Code Rating and a Code Certificate. By 2016 all new homes must be built to zero carbon standards, which will be achieved through step by step tightening of the Building Regulations.

If we look at sustainability from a manufacturing point of view, sustainable manufacture is based on the principle of meeting the needs of the current generation without compromising the ability of future generations to meet their needs.

Check your understanding

When you have completed the questions check out the answers at the back of the book.

Note: more than one multiple choice answer may be correct.

1 Our surroundings and the world in which we live is one definition of:
   a. the Health and Safety at Work Act
   b. the Building Regulations
   c. the environment
   d. the water table.

2 Environmental technology systems:
   a. are eco friendly
   b. use renewable energy
   c. use fossil fuel
   d. use nuclear energy.

3 Identify the hazardous materials below:
   a. old glass bottles
   b. old fluorescent tubes
   c. used batteries
   d. off cuts of trunking and conduit.

4 Identify the recyclable materials below:
   a. old glass bottles
   b. old fluorescent tubes
   c. used batteries
   d. offcuts of trunking and conduit.

5 The Packaging Regulations tell us that all packaging must be designed and manufactured so that the:
   a. goods can never be broken
   b. volume and weight are at a minimum
   c. packaged goods can be moved with a forklift truck and so avoid manual handling
   d. used packaging can be recycled and reused.

6 Identify four things that you use at work that would require to be disposed of as hazardous waste.

7 Identify six pieces of equipment that would require to be disposed of correctly under the WEEE Regulations.

8 How do the Noise at Work Regulations protect workers?

9 Use bullet points to state the basic operating principles of a solar hot water heating system.

10 Use bullet points to state the applications and limitations of a solar hot water heating system.

11 Use bullet points to state the basic operating principle of a solar photovoltaic system.

12 Use bullet points to state the applications and limitations of a solar photovoltaic system.

13 State the advantages and disadvantages of wind energy generation.

14 Very briefly, in three sentences, describe the basic principle of heat pumps.

15 Very briefly, in three sentences, describe the basic principle of CHP systems.

16 In one sentence describe biomass heating.

17 In one sentence describe micro-hydro generation.

18 What is a 'smart' electricity meter?

19 What is 'rainwater harvesting'?

20 What is 'grey water recycling'?

CHAPTER 3

Organizing the work environment

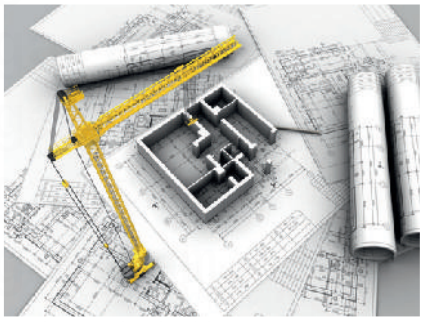

Unit 303 of the City and Guilds 2357 syllabus

Understanding the practices and procedures for overseeing and organizing the work environment (Electrical Installation)

Online Material WWW

This chapter has free associated content, including animations and instructional videos, to support your learning

When you see the logo, visit the website below to access this material:

www.elsevierdirect.com/companions/9780080966281

Safety regulations and laws

Let us begin this chapter by looking at some of the industry standards and regulations which direct us when organizing our working environment.

The most important recent piece of health and safety law was passed by Parliament in 1974 called the Health and Safety at Work Act. This Act gave added powers to the Inspectorate and is the basis of all modern statutory health and safety laws. This law not only increased the employer's liability for safety measures, but also put the responsibility for safety on employees too.

The Health and Safety at Work Act 1974

Many governments have passed laws aimed at improving safety at work, but the most important recent legislation has been the Health and Safety at Work Act 1974. The purpose of the Act is to provide the legal framework for stimulating and encouraging high standards of health and safety at work; the Act puts the responsibility for safety at work on both workers and managers.

Basic Electrical Installation Work. 978-0-08-096628-1

The employer has a duty to care for the health and safety of employees (Section 2 of the Act). To do this he must ensure that:

- the working conditions and standard of hygiene are appropriate;
- the plant, tools and equipment are properly maintained;
- the necessary safety equipment – such as personal protective equipment (PPE), dust and fume extractors and machine guards – is available and properly used;
- the workers are trained to use equipment and plant safely.

Employees have a duty to care for their own health and safety and that of others who may be affected by their actions (Section 7 of the Act). To do this they must:

- take reasonable care to avoid injury to themselves or others as a result of their work activity;
- co-operate with their employer, helping him or her to comply with the requirements of the Act;
- not interfere with or misuse anything provided to protect their health and safety.

Failure to comply with the Health and Safety at Work Act is a criminal offence and any infringement of the law can result in heavy fines, a prison sentence or both.

Enforcement

Laws and rules must be enforced if they are to be effective. The system of control under the Health and Safety at Work Act comes from the Health and Safety Executive (HSE) which is charged with enforcing the law. The HSE is divided into a number of specialist inspectorates or sections which operate from local offices throughout the United Kingdom. From the local offices the inspectors visit individual places of work.

The HSE inspectors have been given wide-ranging powers to assist them in the enforcement of the law. They can:

1. enter premises unannounced and carry out investigations, take measurements or photographs;
2. take statements from individuals;
3. check the records and documents required by legislation;
4. give information and advice to an employee or employer about safety in the workplace;
5. demand the dismantling or destruction of any equipment, material or substance likely to cause immediate serious injury;
6. issue an improvement notice which will require an employer to put right, within a specified period of time, a minor infringement of the legislation;
7. issue a prohibition notice which will require an employer to stop immediately any activity likely to result in serious injury, and which will be enforced until the situation is corrected;
8. prosecute all persons who fail to comply with their safety duties, including employers, employees, designers, manufacturers, suppliers and the self-employed.

Safety documentation

Under the Health and Safety at Work Act, the employer is responsible for ensuring that adequate instruction and information is given to employees to make them safety conscious. Part 1, Section 3 of the Act instructs all employers to prepare a written health and safety policy statement and to bring this to

the notice of all employees. Figure 3.1 shows a typical Health and Safety Policy Statement of the type which will be available within your company. Your employer must let you know who your safety representatives are and the new Health and Safety poster shown in Fig. 3.2 has a blank section into which the names and contact information of your specific representatives can be added. This is a large laminated poster, 595 × 415 mm suitable for wall or notice board display.

All workplaces employing five or more people must display the type of poster shown in Fig. 3.2 after 30 June 2000.

To promote adequate health and safety measures the employer must consult with the employees' safety representatives. In companies which employ more than 20 people this is normally undertaken by forming a safety committee which is made up of a safety officer and employee representatives, usually nominated by a trade union. The safety officer is usually employed full-time in that role. Small companies might employ a safety supervisor, who will have other duties within the company, or alternatively they could join a 'safety group'. The safety group then shares the cost of employing a safety adviser or safety officer, who visits each company in rotation. An employee who identifies a dangerous situation should initially report to his site safety representative. The safety representative should then bring the dangerous situation to the notice of the safety committee for action which will remove the danger. This may mean changing company policy or procedures or making modifications to equipment. All actions of the safety committee should be documented and recorded as evidence that the company takes seriously its health and safety policy.

The Electricity at Work Regulations 1989 (EWR)

This legislation came into force in 1990 and replaced earlier regulations such as the Electricity (Factories Act) Special Regulations 1944. The regulations are made under the Health and Safety at Work Act 1974, and enforced by the Health and Safety Executive. The purpose of the regulations is to 'require precautions to be taken against the risk of death or personal injury from electricity in work activities'.

Section 4 of the EWR tells us that 'all systems must be constructed so as to prevent danger …, and be properly maintained … Every work activity shall be carried out in a manner which does not give rise to danger … In the case of work of an electrical nature, it is preferable that the conductors be made dead before work commences'.

The EWR do not tell us specifically how to carry out our work activities and ensure compliance, but if proceedings were brought against an individual for breaking the EWR, the only acceptable defence would be 'to prove that all reasonable steps were taken and all diligence exercised to avoid the offence' (Regulation 29).

An electrical contractor could reasonably be expected to have 'exercised all diligence' if the installation was wired according to the IEE Wiring Regulations (see below). However, electrical contractors must become more 'legally aware' following the conviction of an electrician for manslaughter at Maidstone Crown Court in 1989. The court accepted that an electrician had caused the death of another man as a result of his shoddy work in wiring up a central heating system. He received a 9-month suspended prison sentence. This case has set

FLASH-BANG ELECTRICAL

Statement of Health and Safety at Work Policy in accordance with the Health and Safety at Work Act 1974

Company objective

The promotion of health and safety measures is a mutual objective for the Company and for its employees at all levels. It is the intention that all the Company's affairs will be conducted in a manner which will not cause risk to the health and safety of its members, employees or the general public. For this purpose it is the Company policy that the responsibility for health and safety at work will be divided between all the employees and the Company in the manner outlined below.

Company's responsibilities

The Company will, as a responsible employer, make every endeavour to meet its legal obligations under the Health and Safety at Work Act to ensure the health and safety of its employees and the general public. Particular attention will be paid to the provision of the following:

1 Plant equipment and systems of work that are safe.
2 Safe arrangements for the use, handling, storage and transport of articles, materials and substances.
3 Sufficient information, instruction, training and supervision to enable all employees to contribute positively to their own safety and health at work and to avoid hazards.
4 A safe place of work, and safe access to it.
5 A healthy working environment.
6 Adequate welfare services.

Note: Reference should be made to the appropriate safety etc. manuals.

Employees' responsibilities

Each employee is responsible for ensuring that the work which he/she undertakes is conducted in a manner which is safe to himself or herself, other members of the general public, and for obeying the advice and instructions on safety and health matters issued by his/her superior. If any employee considers that a hazard to health and safety exists it is his/her responsibility to report the matter to his/her supervisor or through his/her Union Representative or such other person as may be subsequently defined.

Management and Supervisors' responsibilities

Management and supervisors at all levels are expected to set an example in safe behaviour and maintain a constant and continuing interest in employee safety, in particular by:

1 acquiring the knowledge of health and safety regulations and codes of practice necessary to ensure the safety of employees in the workplace,
2 acquainting employees with these regulations on codes of practice and giving guidance on safety matters,
3 ensuring that employees act on instructions and advice given.

General Managers are ultimately responsible to the Company for the rectification or reporting of any safety hazard which is brought to their attention.

Joint consultations

Joint consultation on health and safety matters is important. The Company will agree with its staff, or their representatives, adequate arrangements for joint consultation on measures for promoting safety and health at work, and make and maintain satisfactory arrangements for the participation of their employees in the development and supervision of such measures. Trade Union representatives will initially be regarded as undertaking the role of Safety Representatives envisaged in the Health and Safety at Work Act. These representatives share a responsibility with management to ensure the health and safety of their members and are responsible for drawing the attention of management to any shortcomings in the Company's health and safety arrangements. The Company will in so far as is reasonably practicable provide representatives with facilities and training in order that they may carry out this task.

Review

A review, addition or modification of this statement may be made at any time and may be supplemented as appropriate by further statements relating to the work of particular departments and in accordance with any new regulations or codes of practice.

This policy statement will be brought to the attention of all employees.

Figure 3.1 Typical Health and Safety Policy Statement.

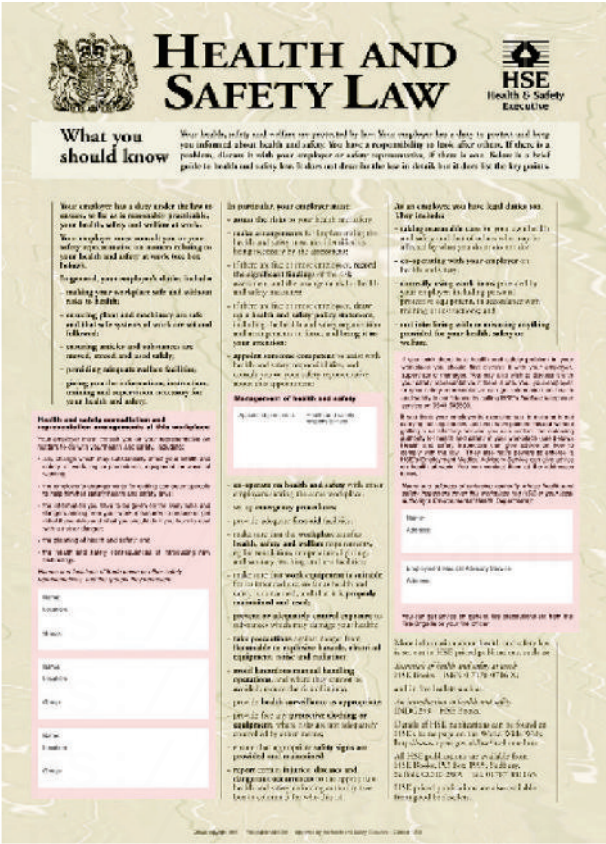

Figure 3.2 New health and safety law poster. *Source*: HSE © Crown copyright material is reproduced with the permission of the Controller of HMSO and Her Majesty's Stationery Office, Norwich.

an important legal precedent, and in future any tradesman or professional who causes death through negligence or poor workmanship risks prosecution and possible imprisonment.

The Management of Health and Safety at Work Regulations 1999

The Health and Safety at Work Act 1974 places responsibilities on employers to have robust health and safety systems and procedures in the workplace. Directors and managers of any company who employ more than five employees can be held personally responsible for failures to control health and safety.

The Management of Health and Safety at Work Regulations 1999 tell us that employers must systematically examine the workplace, the work activity and the management of safety in the establishment through a process of 'risk assessments'. A record of all significant risk assessment findings must be kept in a safe place and be available to an HSE inspector if required. Information based on these findings must be communicated to relevant staff and if changes in work behaviour patterns are recommended in the interests of safety, then they must be put in place. The process of risk assessment is considered in detail in Chapter 1 of this book.

Risks which may require a formal assessment in the electrotechnical industry might be:

- working at heights;
- using electrical power tools;
- falling objects;
- working in confined places;
- electrocution and personal injury;
- working with 'live' equipment;
- using hire equipment;
- manual handling – pushing – pulling – lifting;
- site conditions – falling objects – dust – weather – water – accidents and injuries.

And any other risks which are particular to a specific type of workplace or work activity.

The Construction (Health, Safety and Welfare) Regulations 1996

An electrical contractor is a part of the construction team, usually as a subcontractor, and therefore the regulations particularly aimed at the construction industry also influence the daily work procedures and environment of an electrician. The most important recent piece of legislation is the Construction Regulations.

The temporary nature of construction sites makes them one of the most dangerous places to work. These regulations are made under the Health and Safety at Work Act 1974 and are designed specifically to promote safety at work in the construction industry. Construction work is defined as any building or civil engineering work, including construction, assembly, alterations, conversions, repairs, upkeep, maintenance or dismantling of a structure.

The general provision sets out minimum standards to promote a good level of safety on site. Schedules specify the requirements for guardrails, working platforms, ladders, emergency procedures, lighting and welfare facilities. Welfare facilities set out minimum provisions for site accommodation: washing facilities, sanitary conveniences and protective clothing. There is now a duty for all those working on construction sites to wear head protection, and this includes electricians working on site as subcontractors.

The Construction (Design and Management) Regulations 1994

The Construction (Design and Management) Regulations (CDM) are aimed at improving the overall management of health, safety and welfare throughout all stages of the construction project.

The person requesting that construction work commence, the client, must first of all appoint a '**duty holder**', someone who has a duty of care for health, safety and welfare matters on site. This person will be called a 'planning supervisor'. The planning supervisor must produce a 'pre-tender' health and safety plan and co-ordinate and manage this plan during the early stages of construction.

Definition

'Duty holder', someone who has a duty of care for health, safety and welfare matters on site. This phrase recognizes the level of responsibility which electricians are expected to take on a part of their job in order to control electrical safety in the work environment.

The client must also appoint a principal contractor who is then required to develop the health and safety plan made by the planning supervisor, and keep it up to date during the construction process to completion.

The degree of detail in the health and safety plan should be in proportion to the size of the construction project and recognize the health and safety risks involved on that particular project. Small projects will require simple straightforward plans; large projects, or those involving significant risk, will require more detail. The CDM Regulations will apply to most large construction projects but they do not apply to the following:

- Construction work, other than demolition work, that does not last longer than 30 days and does not involve more than four people.
- Construction work carried out inside commercial buildings such as shops and offices, which does not interrupt the normal activities carried out on those premises.
- Construction work carried out for a domestic client.
- The maintenance and removal of pipes or lagging which form a part of a heating or water system within the building.

BS EN graphical symbols

Architects' scale drawings of a building use graphical symbols to identify the position of electrical equipment.

The standard symbols used by the electrotechnical industry are those recommended by the British Standard EN 60617 Graphical symbols for Electrical Power, Telecommunications and Electrical Diagrams. Some of the more common electrical installations symbols are given in Fig. 3.3.

Laws protecting people

In Chapters 1 and Chapter 2 of this book we looked at some of the major pieces of legislation that affect our working environment and some of the main pieces of environmental law. Let us now look at some of the laws and regulations that protect and affect us as individuals, and our human rights and responsibilities.

Employment Rights Act 1996

If you work for a company you are an employee and you will have a number of legal rights under the Employment Rights Act 1996.

As a trainee in the electrotechnical industry you are probably employed by a company and, therefore, are an employee. There are strict guidelines regarding those who are employed and those who are self-employed. Indicators of being employed are listed below:

- You work wholly or mainly for one company and work is centred upon the premises of the company.
- You do not risk your own money.
- You have no business organization such as a storage facility or stock in trade.
- You do not employ anyone.
- You work a set number of hours in a given period and are paid by the hour and receive a weekly or monthly wage or salary.

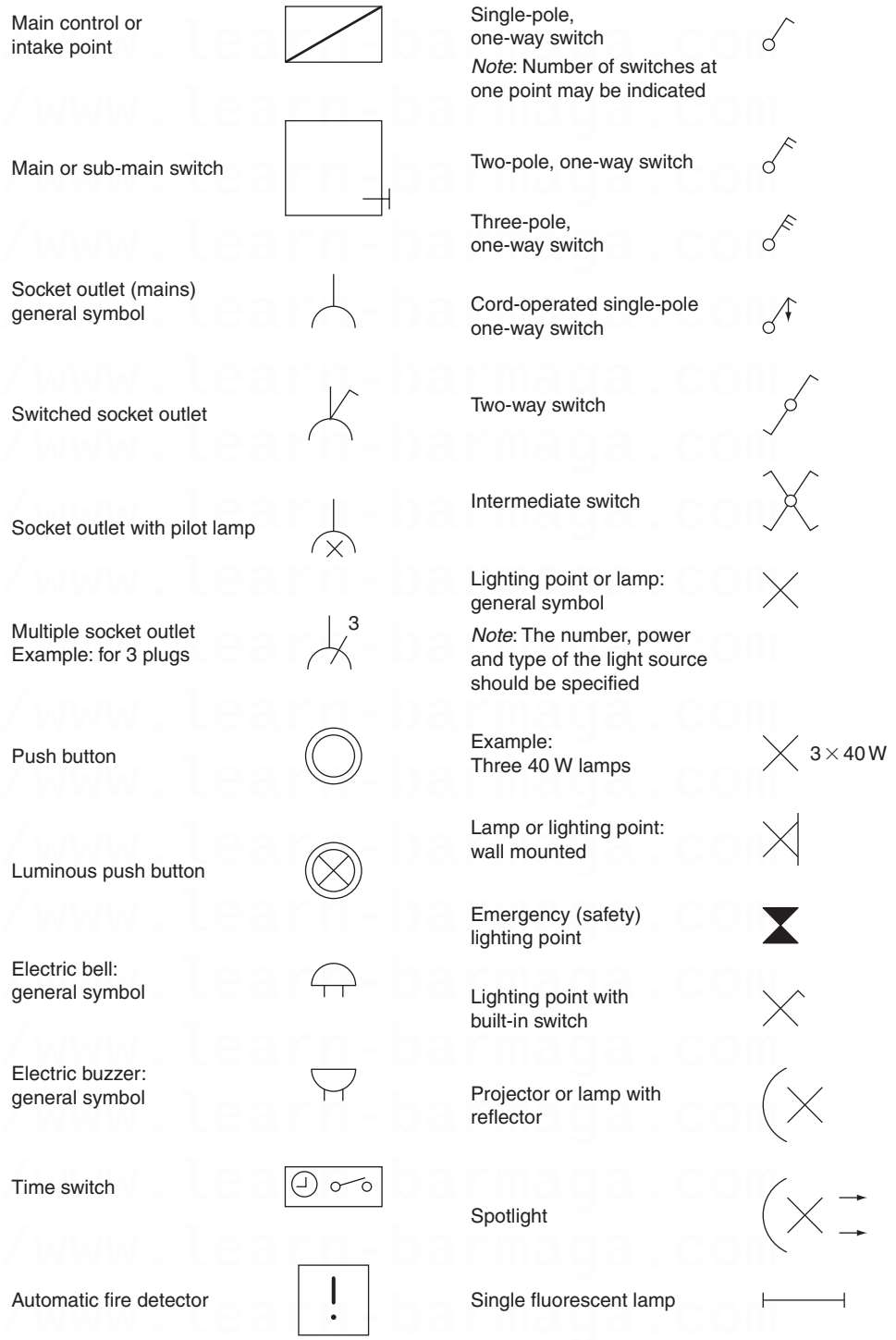

Figure 3.3 Some BS EN 60617 electrical installation symbols.

- Someone else has the right to control what you do at work even if such control is rarely practised.

Indicators of being self-employed are as follows:

- You supply the materials, plant and equipment necessary to do the job.
- You give a price for doing a job and will bear the consequences if your price is too low or something goes wrong.

- You have the right to hire other people who will answer to you and are paid by you to do a job.
- You may be paid an agreed amount for a job regardless of how long it takes or be paid according to some formula, for example, a fee to 'first fix' a row of houses.
- Within an overall deadline, you have the right to decide how and when the work will be done.

The titles 'employed' or 'self-employed' are not defined by statute but have emerged through cases coming before the courts. The above points will help in deciding the precise nature of the working relationship.

Home working is a growing trend which prompts the question as to whether home workers are employed or self-employed. As in any circumstance, it will depend upon the specific conditions of employment, and the points mentioned above may help to decide the question.

The Inland Revenue look with concern at those people who claim to be self-employed but do all or most of their work for one company. There is a free leaflet available from local Inland Revenue Offices, IR 56 – titled '*Employed or Self-Employed*' – which will give further guidance if required.

If you are an employee you have a special relationship in law with your employer which entitles you to the following benefits:

- A written statement of the particulars of your employment. It is clearly in the interests of both parties to understand at the outset of their relationship the terms and conditions of employment. The legal relationship between employer and employee is one of contract. Both parties are bound by the agreed terms but the contract need not necessarily be in writing, although contracts of apprenticeship must be in writing.
- The date your employment started.
- The continuity of service, that is, whether employment with a previous employer is to count as part of an employee's continuous service. Continuous service is normally with one employer but there are exceptions, for example, if a business is transferred or taken over or there is a change of partners or trustees. This is important because many employees' rights depend on the need to show that he or she has worked for the 'appropriate period' and this is known as '**continuous service**'.
- The job title.
- The normal place from which you work.
- A brief description of your work.
- The hours to be worked.
- Holiday entitlement and holiday pay.
- Sick pay entitlement.
- Pension scheme arrangements.
- The length of notice which an employee is obliged to give and is entitled to receive to terminate his contract of employment.
- Where the employment is not intended to be permanent, the period for which it is expected to continue and the date when it is to end.
- Disciplinary and grievance procedures.
- The rate of pay and frequency, weekly or monthly.
- An itemized pay statement showing
  - the gross amount of the wage or salary;

- the amounts of any deductions and the purpose for which they have been made. This will normally be tax and National Insurance contributions, but may also include payments to professional bodies or trade unions;
- the net amount of salary being paid.

An **employer** has responsibilities to all employees. Even if the responsibilities are not written down in the contract of employment, they are implied by law. Case histories speak of a relationship of trust, confidence and respect. These responsibilities include:

- The obligation to pay an employee for work done.
- The obligation to treat an employee fairly.
- The obligation to take reasonable care of an employee's health and safety.
- An obligation to provide equal treatment both for men and women.

An **employee** also has responsibilities to his employer. These include:

- Carrying out the tasks for which you are employed with all reasonable skill and care.
- Conducting yourself in such a way as would best serve your employer's interests.
- Carrying out all reasonable orders.

An employee is not expected to carry out any order that is plainly illegal or unreasonable. 'Illegal' is quite easy to define – anything which is against the law, for example, driving a vehicle for which you do not hold a licence or falsifying documents or accounts. 'Unreasonable' is more difficult to define, what is reasonable to one person may be quite unreasonable to another person.

Finally, employees are under a general duty not to disclose confidential information relating to their employer's affairs that they might obtain in the course of their work. Employees are also under a general duty not to assist a competitor of their employer. This is one aspect of the employee's duty to ensure that the relationship between employer and employee is one of trust. Even when an employee has left an employer, confidential information is not to be disclosed.

Health and Safety (First Aid) Regulations 1981

People can suffer an injury or become ill whilst at work. It does not matter whether the injury or illness is caused by the work they do or not, what is important is that they are able to receive immediate attention by a competent person or that an ambulance is called in serious cases. First aid at work covers the arrangements that an employer must make to ensure that this happens. It can save lives and prevent a minor incident becoming a major one.

The Health and Safety (First Aid) Regulations 1981 requires employers to provide '**adequate**' and '**appropriate**' equipment, facilities and personnel to enable first aid to be given to employees if they are injured or become ill at work. What is adequate and appropriate will depend upon the type of work being carried out by the employer. The minimum provision is a suitably stocked first aid box and a competent person to take charge of first aid arrangements.

Employers must consider:

- How many people are employed and, therefore, how many first aid boxes will be required?
- What is the pattern of working hours, shift work, night work, is a 'first aider' available for everyone at all times?

- How many trained 'first aiders' will be required?
- Where will first aid boxes be made available?
- Do employees travel frequently or work alone?
- Will it be necessary to issue personal first aid boxes if employees travel or work away from the company's main premises?
- How hazardous is the work being done – what are the risks?
- Are different employees at different levels of risk?
- What has been the accident or sickness record of staff in the past?

Although there is no legal responsibility for employers to make provision for non-employees, the HSE strongly recommends that they are included in any first aid provision.

We looked at first aid provision at work in Chapter 1 of this book.

Data Protection Act 1998

The right to privacy is a fundamental human right and one that many of us take for granted. Most of us, for instance, would not want our medical records freely circulated, and many people are sensitive about revealing their age, religious beliefs, family circumstances or academic qualifications. In the United Kingdom, even the use of name and address files for mail shots is often felt to be an invasion of privacy.

With the advent of large computerized databases it is now possible for sensitive personal information to be stored without the individual's knowledge and accessed by, say, a prospective employer, credit card company or insurance company in order to assess somebody's suitability for employment, credit or insurance.

The Data Protection Act 1984 grew out of public concern about personal privacy in the face of rapidly developing computer technology.

The Act covers 'personal data' which is 'automatically processed'. It works in two ways, giving individuals certain rights whilst requiring those who record and use personal information on computer to be open about that use and to follow proper practices.

The Data Protection Act 1998 was passed in order to implement a European Data Protection Directive. This Directive sets a standard for data protection throughout all the countries of the European Union, and the new Act was brought into force in March 2000. The Act gives the following useful definitions:

- *Data subjects*: the individuals to whom the personal data relate – we are all data subjects.
- *Data users*: those who control the contents and use a collection of personal data. They can be any type of company or organization, large or small, within the public or private sector.
- *Personal data*: information about living, identifiable individuals. Personal data does not have to be particularly sensitive information and can be as little as a name and address.
- *Automatically processed*: processed by computer or other technology such as document image processing systems. The Act does not currently cover information which is held on manual records, for example, in ordinary paper files.

Registered data users must comply with the eight Data Protection principles of good information handling practice contained in the Act. Broadly these state that data must be:

1. obtained and processed fairly and lawfully;
2. held for the lawful purposes described in the data users' register entry;
3. used for the purposes and disclosed only to those people described in the register entry;
4. adequate, relevant and not excessive in relation to the purposes for which they are held;
5. accurate and, where necessary, kept up to date;
6. held no longer than is necessary for the registered purpose;
7. accessible to the individual concerned who, where appropriate, has the right to have information about themselves corrected or erased;
8. surrounded by proper security.

Exemptions from the Act

- The Act does not apply to payroll, pensions and accounts data, nor to names and addresses held for distribution purposes.
- Registration may not be necessary if the data is for personal, family, household or recreational use.
- Data subjects do not have a right to access data if the sole aim of collecting it is for statistical or research purposes.
- Data can be disclosed to the data subject's agent (e.g. lawyer or accountant), to persons working for the data user, and in response to urgent need to prevent injury or damage to health.

Additionally, there are exemptions for special categories, including data held:

- in connection with national security,
- for prevention of crime,
- for the collection of tax or duty.

The rights of data subjects

The Data Protection Act allows individuals to have access to information held about themselves on computer and where appropriate to have it corrected or deleted.

As an individual you are entitled, on making a written request to a data user, to be supplied with a copy of any personal data held about yourself. The data user may charge a fee of up to £10 for each register entry for supplying this information but in some cases it is supplied free.

Usually the request must be responded to within 40 days. If not, you are entitled to complain to the Registrar or apply to the courts for correction or deletion of the data.

Apart from the right to complain to the Registrar, data subjects also have a range of rights which they may exercise in the civil courts. These are:

- Right to compensation for unauthorized disclosure of data.
- Right to compensation for inaccurate data.
- Right of access to data and to apply for rectification or erasure where data is inaccurate.
- Right to compensation for unauthorized access, loss or destruction of data.

For more information see www.dataprotection.gov.uk

Prejudice and discrimination

It is because we are all different to each other that life is so interesting and varied. Our culture is about the way of life that we have, the customs, ideas and experiences that we share and the things that we find acceptable and unacceptable. Different groups of people have different cultures. When people have a certain attitude towards you, or the group of people to which you belong, or a belief about you that is based upon lack of knowledge, understanding or myth, this is prejudice.

When prejudice takes form or action it becomes discrimination and this often results in unfair treatment of people. Regardless of our age, ability, sex, religion, race or sexuality we should all be treated equally and with respect. If we are treated differently because of our differences, we are being discriminated against.

If you are being discriminated against or you see it happening to someone else, you do not have to put up with it. Stay calm and do not retaliate but report it to someone, whoever is the most appropriate person: your supervisor, trainer or manager. If you are a member of a trade union you may be able to get help from them if it is an employment related matter.

There are three areas covered by legislation at the moment, these are race, sex and disability. In the next few years the law will change to make it unlawful to discriminate in the training or workplace on the grounds of sexual orientation, religious belief and age.

The Race Relations Act 1976 and Amendment Act 2000

The 1976 Race Relations Act (RRA) made employers liable for acts of racial discrimination committed by their employees in the course of their employment. However, police officers are office holders, not employees, and, therefore, chief officers of the police were not liable under the 1976 Act for acts of racial discrimination. The Commission for Racial Equality proposed that the Act be extended to include all public services and the amendment came into force in 2000.

It is illegal to discriminate against someone because of their race, colour, nationality, citizenship or ethnic origin.

Institutional racism is when the policies or practises of an organization or institution result in its failure to provide an appropriate service to people because of their colour, culture or ethnic origin. It may mean that the organization or institution does, or does not do something, or that someone is treated less favourably. This includes public services as well as educational institutions.

There are some exceptions in the RRA. It does not apply to certain jobs where people from a certain ethnic or racial background are required for authenticity. These are known as ‘genuine occupational qualifications’ and might apply to actors and restaurants.

The Commission for Racial Equality website can be found at www.cre.gov.uk

Sex Discrimination Act 1975

‘Sexism’ takes place every time a person, usually a woman, is discriminated against because of their sex. The Sex Discrimination Act of 1975 makes it

unlawful to discriminate against people on sexual grounds in areas relating to recruitment, promotion or training. Job advertisements must not discriminate in their language but they can make it clear that they are looking for people of a particular sex. If, though, a person of either sex applies then they must be treated equally and fairly.

There are some exceptions in the Sex Discrimination Act (SDA) known as '**genuine occupational qualifications**' that might apply to artists, models, actors and some parts of the priesthood in the church. Some exceptions can also apply when appointing people to occupations where 'decency' is required, for example, in changing room attendants in swimming pools, gymnasiums, etc, and women are not allowed to work underground.

Sex discrimination is when someone is treated less favourably because of sex or marital status. It includes sexual harassment and unfavourable treatment because a woman is pregnant. Employers fear a high level of absenteeism, often unjustified, from a mother who is trying to juggle the conflicting demands of work and motherhood. This is known as 'direct sex discrimination'.

'Indirect sex discrimination' occurs when a condition of the job is applied to both sexes but excludes or disadvantages a larger proportion of one sex and is not justifiable. For example, an unnecessary height requirement of 180 cm (5' 10") would discriminate against women because fewer women would be able to meet this requirement.

The Equal Opportunities Commission has published a Code of Practice that gives guidance on best practice in the promotion of equality of opportunity in employment. Further information can be found on the SDA website at www.eoc.org.uk

Disability Discrimination Act 1995

There are more than 8.5 million disabled people in the United Kingdom. The Disability Discrimination Act (DDA) makes it unlawful to discriminate against a disabled person in the areas of employment, access to goods and services and buying or renting land or property.

It is now unlawful for employers of more than 15 people to discriminate against employees or job applicants on the grounds of disability. Reasonable adjustments must be made for people with disabilities and employers must ensure that discrimination does not occur in the workplace.

Under Part 111 of the DDA, from 1 October 2004 service providers will have to take reasonable steps to remove, alter or provide reasonable means of avoiding physical features that make it impossible or unreasonably difficult for disabled people to use their services. The duty requires service providers to make '**reasonable**' adjustments to their premises so that disabled people can use the service and are not restricted by physical barriers. If this is not possible then the service should be provided by means of a reasonable alternative such as bringing goods to the disabled person or helping the person to find items.

All organizations which provide goods, facilities or services to the public are covered by the DDA including shops, offices, public houses, leisure facilities, libraries, museums, banks, cinemas, churches and many more; in fact there are few exemptions.

Some service providers will need to incur significant capital expenditure in order to comply with the DDA. What is '**reasonable**' will depend upon the state and condition of the service provider's premises. A subjective standard will

apply when determining what is reasonable under the circumstances at a given location. Whether or not an adjustment is reasonable will ultimately be a question of fact for the courts.

Further information can be found on the DDA website at www.disability.gov.uk

The Human Rights Act 1998

The Human Rights Act (HRA) 1998 came into force on 2 October 2000 bringing the European Convention on Human Rights into UK law. It means that if you think your human rights have been violated, you can take action through the British court system, rather than taking it to the European Court of Human Rights. The Act makes it unlawful for a '**public authority**' to act in a way that goes against any of the rights laid down in the Convention unless an Act of Parliament meant that it could not have acted differently. The basic human rights in the Human Rights Act are:

- the right to life,
- the right to a fair trial,
- the right to respect for your private and family life,
- the right to marry,
- the right to liberty and security,
- prohibition of torture,
- prohibition of slavery and forced labour,
- prohibition of discrimination,
- prohibition of the abuse of rights,
- freedom of thought, conscience and religion,
- freedom of expression,
- freedom of assembly and association,
- no punishment without law.

If you feel that your human rights have been violated, you should seek advice from a solicitor. Rights under the Act can only be used against a public authority such as the police or a local authority. They cannot be used against a private company. For more information see www.humanrights.gov.uk

Types of technical information

Technical information is communicated to electrotechnical personnel in lots of different ways. It comes in the form of:

- *Specifications* – these are details of the client's requirements, usually drawn up by an architect. For example, the specification may give information about the type of wiring system to be employed or detail the type of luminaires or other equipment to be used.
- *Manufacturer's data* – if certain equipment is specified, let's say a particular type of luminaire or other piece of equipment, then the manufacturer's data sheet will give specific instructions for its assembly and fixing requirements. It is always good practice to read the data sheet before fitting the equipment. A copy of the data sheet should also be placed in the job file for the client to receive when the job is completed.
- *Reports and schedules* – a report is the written detail of something that has happened or the answer to a particular question asked by another professional

Definition

A schedule is a list or programme of planned work.

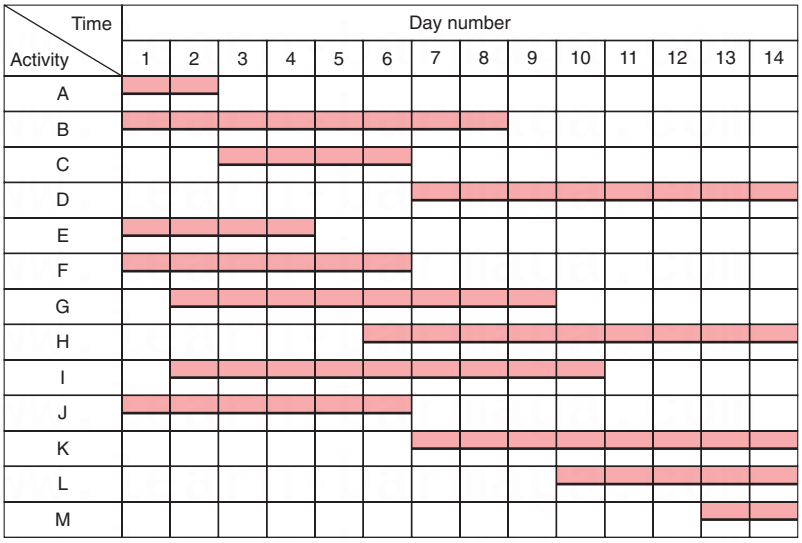

Figure 3.4 A simple bar chart or schedule of work.

person or the client. It might be the details of why an employee is to be disciplined or a report of some problem on site.

If the report is internal to the organization, a handwritten report is acceptable, but if the final report will go outside the organization, then it must be more formal and typed.

A schedule gives information about a programme or timetable of work, it might be a list or a chart giving details of when certain events will take place. For example, when the electricians will start to do the 'first fix' and how many days it will take. A simple bar chart is an easy to understand schedule of work that shows how different activities interact on a project. Figure 3.4 shows a bar chart or schedule of work where activity A takes 2 days to complete and activity B starts at the same time as activity A but carries on for 8 days, etc.

Definition

Bar chart – the object of any bar chart is to establish the sequence and timing of the various activities involved in the whole job.

- *User instructions* – give information about the operation of a piece of equipment. Manufacturers of equipment provide 'user instructions' and a copy should be placed in the job file for the client to receive when the project is handed over.
- *Job sheets and Time sheets* – give 'on site' information. Job sheets give information about what is to be done and are usually issued by a manager to an electrician. Time sheets are a record of where an individual worker has been spending his time, which job and for how long. This information is used to make up individual wages and to allocate company costs to a particular job. We will look at these again later under the sub-heading 'on-site documentation'.

Those who need or use technical information

Technical information is required by many of the professionals involved in any electrotechnical activity, so who are the key people?

The Operative – in our case this will be the skilled electricians actually on site, doing the job for the electrotechnical company.

FLASH-BANG ELECTRICAL internal **MEMO**

From Dave Twem To John Gall

Subject Power Tool Date Thrus 11 Aug. 10

Message

Have today ordered Hammer Drill from P.S. Electrical – should be with you end of next week – Hope this is OK. Dave.

Figure 3.5 Typical standard memo form.

The Supervisor – he may have overall responsibility for a number of electricians on site and will need the 'big picture'.

The Contractor – the main contractor takes on the responsibility of the whole project for the client. The main contractor may take on a sub-contractor to carry out some part of the whole project. On a large construction site the electrical contractor is usually the sub-contractor.

The Site Agent – he will be responsible for the smooth running of the whole project and for bringing the contract to a conclusion on schedule and within budget. The site agent may be nominated by the architect.

The Customer or Client – they also are the people ordering the work to be done. They will pay the final bill that pays everyone's wages.

On-site documentation

A lot of communications between and within larger organizations take place by completing standard forms or sending internal memos. Written messages have the advantage of being 'auditable'. An auditor can follow the paperwork trail to see, for example, who was responsible for ordering certain materials.

When completing standard forms, follow the instructions given and ensure that your writing is legible. Do not leave blank spaces on the form, always specifying 'not applicable' or 'N/A' whenever necessary. Sign or give your name and the date as asked for on the form. Finally, read through the form again to make sure you have answered all the relevant sections correctly.

Internal memos are forms of written communication used within an organization; they are not normally used for communicating with customers or suppliers. Figure 3.5 shows the layout of a typical standard memo form used by Dave Twem to notify John Gall that he has ordered the hammer drill.

Letters provide a permanent record of communications between organizations and individuals. They may be handwritten for internal use but formal business letters give a better impression of the organization if they are type-written. A letter should be written using simple concise language, and the tone of the letter should always be polite even if it is one of complaint. Always include the date of the

correspondence. The greeting on a formal letter should be 'Dear Sir/Madam' and conclude with 'Yours faithfully'. A less formal greeting would be 'Dear Mr Smith' and conclude 'Yours sincerely'. Your name and status should be typed below your signature.

Definition

A *delivery note* is used to confirm that goods have been delivered by the supplier, who will then send out an invoice requesting payment.

Delivery notes

When materials are delivered to site, the person receiving the goods is required to sign the driver's '**delivery note**'. This record is used to confirm that goods have been delivered by the supplier, who will then send out an invoice requesting payment, usually at the end of the month.

The person receiving the goods must carefully check that all the items stated on the delivery note have been delivered in good condition. Any missing or damaged items must be clearly indicated on the delivery note before signing, because, by signing the delivery note the person is saying 'yes, these items were delivered to me as my company's representative on that date and in good condition and I am now responsible for these goods'. Suppliers will replace materials damaged in transit provided that they are notified within a set time period, usually 3 days. The person receiving the goods should try to quickly determine their condition. Has the packaging been damaged, does the container 'sound' like it might contain broken items? It is best to check at the time of delivery if possible, or as soon as possible after delivery and within the notifiable period. Electrical goods delivered to site should be handled carefully and stored securely until they are installed. Copies of delivery notes are sent to head office so that payment can be made for the goods received.

Definition

A *time sheet* is a standard form completed by each employee to inform the employer of the actual time spent working on a particular contract or site.

Time sheets

A **time sheet** is a standard form completed by each employee to inform the employer of the actual time spent working on a particular contract or site. This helps the employer to bill the hours of work to an individual job. It is usually a weekly document and includes the number of hours worked, the name of the job and any travelling expenses claimed. Office personnel require time sheets such as that shown in Fig 3.6 so that wages can be made up.

Definition

A *job sheet* or job card such as that shown in Fig 3.7 carries information about a job which needs to be done, usually a small job.

Job sheets

A **job sheet** or job card such as that shown in Fig 3.7 carries information about a job which needs to be done, usually a small job. It gives the name and address of the customer, contact telephone numbers, often a job reference number and a brief description of the work to be carried out. A typical job sheet work description might be:

Job 1 Upstairs lights not working.
Job 2 Funny fishy smell from kettle socket in kitchen.

An electrician might typically have a 'jobbing day' where he picks up a number of job sheets from the office and carries out the work specified.

Job 1, for example, might be the result of a blown fuse which is easily rectified, but the electrician must search a little further for the fault which caused the fuse to blow in the first place. The actual fault might, for example, be a decayed flex on a pendant drop which has become shorted out, blowing the fuse. The pendant drop would be re-flexed or replaced, along with any others in poor

TIME SHEET

FLASH-BANG ELECTRICAL

Employee's name (Print) .....

Week ending .....

Day	Job number and/or address	Start time	Finish time	Total hours	Travel time	Expenses
Monday						
Tuesday						
Wednesday						
Thursday						
Friday						
Saturday						
Sunday						

Employee's signature ..... Date .....

Figure 3.6 Typical time sheet.

condition. The installation would then be tested for correct operation and the customer given an account of what has been done to correct the fault. General information and assurances about the condition of the installation as a whole might be requested and given before setting off to job 2.

The kettle socket outlet at job 2 is probably getting warm and, therefore, giving off that 'fishy' bakelite smell because loose connections are causing the bakelite socket to burn locally. A visual inspection would confirm the diagnosis. A typical solution

JOB SHEET

Job Number .....

FLASH-BANG ELECTRICAL

Customer name .....

Address of job .....

.....

.....

Contact telephone No. .....

Work to be carried out .....

.....

.....

.....

Any special instructions/conditions/materials used

Figure 3.7 Typical job sheet.

would be to replace the socket and repair any damage to the conductors inside the socket box. Check the kettle plug top for damage and loose connections. Make sure all connections are tight before reassuring the customer that all is well; then, off to the next job or back to the office.

The time spent on each job and the materials used are sometimes recorded on the job sheet, but alternatively a daywork sheet can be used. This will depend upon what is normal practice for the particular electrical company. This information can then be used to 'bill' the customer for work carried out.

Daywork sheets

Daywork is one way of recording variations to a contract, that is, work done which is outside the scope of the original contract. If daywork is to be carried out, the site supervisor must first obtain a signature from the client's representative, for example, the architect, to authorize the extra work. A careful record must then be kept on the daywork sheets of all extra time and materials used so that the client can be billed for the extra work. A typical daywork sheet is shown in Fig. 3.8.

Definition

Daywork is one way of recording variations to a contract.

Reports

On large jobs, the foreman or supervisor is often required to keep a report of the relevant events which happen on the site – for example, how many people from your company are working on site each day, what goods were delivered, whether

FLASH-BANG ELECTRICAL

DAYWORK SHEET

Client name .....

Job number/ref. .....

Date	Labour	Start time	Finish time	Total hours	Office use

Materials quantity	Description	Office use

Site supervisor or F.B. Electrical Representative responsible for carrying out work .....

Signature of person approving work and status e.g.

Client ☐ Architect ☐ Q.S. ☐ Main contractor ☐ Clerk of works ☐

Signature .....

Figure 3.8 Typical daywork sheet.

there were any breakages or accidents, and records of site meetings attended. Some firms have two separate documents, a site diary to record daily events and a weekly report which is a summary of the week's events extracted from the site diary. The site diary remains on site and the weekly report is sent to head office to keep managers informed of the work's progress.

The electrical team

The electrical contractor is the sub-contractor responsible for the installation of electrical equipment within the building.

Electrical installation activities include:

- installing electrical equipment and systems into new sites or locations;
- installing electrical equipment and systems into buildings that are being refurbished because of change of use;
- installing electrical equipment and systems into buildings that are being extended or updated;
- replacement, repairs and maintenance of existing electrical equipment and systems.

An electrical contracting firm is made up of a group of individuals with varying duties and responsibilities. There is often no clear distinction between the duties of the individuals, and the responsibilities carried by an employee will vary from one employer to another. If the firm is to be successful, the individuals must work together to meet the requirements of their customers. Good customer relationships are important for the success of the firm and the continuing employment of the employee.

The customer or his representatives will probably see more of the electrician and the electrical trainee than the managing director of the firm and, therefore, the image presented by them is very important. They should always be polite and seen to be capable and in command of the situation. This gives a customer confidence in the firm's ability to meet his or her needs. The electrician and his trainee should be appropriately dressed for the job in hand, which probably means an overall of some kind. Footwear is also important, but sometimes a difficult consideration for a journeyman electrician. For example, if working in a factory, the safety regulations may insist that protective footwear be worn, but rubber boots may be most appropriate for a building site. However, neither of these would be the most suitable footwear for an electrician fixing a new light fitting in the home of the managing director!

The electrical installation in a building is often carried out alongside other trades. It makes sound sense to help other trades where possible and to develop good working relationships with other employees.

The employer has the responsibility of finding sufficient work for his employees, paying government taxes and meeting the requirements of the Health and Safety at Work Act described in Chapter 1. The rates of pay and conditions for electricians and trainees are determined by negotiation between the Joint Industry Board and UNITE, which will also represent their members in any disputes. Electricians are usually paid at a rate agreed for their grade as an electrician, approved electrician or technician electrician; movements through the grades are determined by a combination of academic achievement and practical experience.

The electrical team will consist of a group of professionals with varying responsibilities.

Designing an electrical installation

Definition

The *designer* of any electrical installation is the person who interprets the electrical requirements of the customer within the regulations.

The designer of an electrical installation must ensure that the design meets the requirements of the IEE Wiring Regulations for electrical installations and any other regulations which may be relevant to a particular installation. The designer may be a professional technician or engineer whose job is to design electrical installations for a large contracting firm. In a smaller firm, the designer may also be the electrician who will carry out the installation to the customer's requirements. The **designer** of any electrical installation is the person who

interprets the electrical requirements of the customer within the regulations, identifies the appropriate types of installation, the most suitable methods of protection and control and the size of cables to be used.

A large electrical installation may require many meetings with the customer and his professional representatives in order to identify a specification of what is required. The designer can then identify the general characteristics of the electrical installation and its compatibility with other services and equipment, as indicated in Part 3 of the regulations. The protection and safety of the installation, and of those who will use it, must be considered, with due regard to Part 4 of the regulations. An assessment of the frequency and quality of the maintenance to be expected will give an indication of the type of installation which is most appropriate.

The size and quantity of all the materials, cables, control equipment and accessories can then be determined. This is called a '**bill of quantities**'.

It is a common practice to ask a number of electrical contractors to tender or submit a price for work specified by the bill of quantities. The contractor must cost all the materials, assess the labour cost required to install the materials and add on profit and overhead costs in order to arrive at a final estimate for the work. The contractor tendering the lowest cost is usually, but not always, awarded the contract.

To complete the contract in the specified time the electrical contractor must use the management skills required by any business to ensure that men and materials are on site as and when they are required. If alterations or modifications are made to the electrical installation as the work proceeds which are outside the original specification, then a **variation order** must be issued so that the electrical contractor can be paid for the additional work.

The specification for the chosen wiring system will be largely determined by the building construction and the activities to be carried out in the completed building.

An industrial building, for example, will require an electrical installation which incorporates flexibility and mechanical protection. This can be achieved by a conduit, tray or trunking installation.

In a block of purpose-built flats, all the electrical connections must be accessible from one flat without intruding upon the surrounding flats. A loop-in conduit system, in which the only connections are at the light switch and outlet positions, would meet this requirement.

For a domestic electrical installation an appropriate lighting scheme and multiple socket outlets for the connection of domestic appliances, all at a reasonable cost, are important factors which can usually be met by a PVC insulated and sheathed wiring system.

The final choice of a wiring system must rest with those designing the installation and those ordering the work, but whatever system is employed, good workmanship by competent persons is essential for compliance with the regulations (IEE Regulation 134.1.1).

By definition a **competent person** is one who has the ability to perform a particular task properly.

Generally speaking an electrician will have the necessary skills to perform a wide range of electrical activities competently.

The HSE Regulation 16 states that persons 'must be competent to prevent danger … so that the person themselves or others are not placed at risk due to a lack of skill when dealing with electrical equipment'.

The 17th Edition of the IEE Regulations also makes the following definitions relating to people:

Definition

The size and quantity of all the materials, cables, control equipment and accessories can then be determined. This is called a '*bill of quantities*'.

Definition

By definition a *competent person* is one who has the ability to perform a particular task properly.

Key fact

Definitions

A person can be described as

- ordinary
- competent
- instructed or
- skilled

depending upon that person's skill or ability.

Definition

An *ordinary person* is a person who is neither a skilled person nor an instructed person.

A *skilled person* is a person with technical knowledge or sufficient experience to be able to avoid the dangers which electricity may create.

An *instructed person* is a person adequately advised or supervised by skilled persons to be able to avoid the dangers which electricity may create.

An **ordinary person** is a person who is neither a skilled person nor an instructed person.

A **skilled person** is a person with technical knowledge or sufficient experience to be able to avoid the dangers which electricity may create.

An **instructed person** is a person adequately advised or supervised by skilled persons to be able to avoid the dangers which electricity may create.

Try this

Definitions

People may be described as an ordinary person, a skilled person, an instructed person or a competent person. Place people you know into each of these categories – for example yourself, your parents, your supervisor, etc.

The necessary skills can be acquired by an electrical trainee who has the correct attitude and dedication to his or her craft. NVQ Level 3 is 'skilled craft level' or the level required to be considered 'competent'.

Legal contracts

Before work commences, some form of legal contract should be agreed between the two parties, that is, those providing the work (e.g. the sub-contracting electrical company) and those asking for the work to be carried out (e.g. the main building company).

A contract is a formal document which sets out the terms of agreement between the two parties. A standard form of building contract typically contains four sections:

1. *The articles of agreement* – this names the parties, the proposed building and the date of the contract period.
2. *The contractual conditions* – this states the rights and obligations of the parties concerned, for example, whether there will be interim payments for work completed, or a penalty if work is not completed on time.
3. *The appendix* – this contains details of costings, for example, the rate to be paid for extras as daywork, who will be responsible for defects, how much of the contract tender will be retained upon completion and for how long.
4. *The supplementary agreement* – this allows the electrical contractor to recoup any value-added tax paid on materials at interim periods.

In signing the contract, the electrical contractor has agreed to carry out the work to the appropriate standards in the time stated and for the agreed cost. The other party, say the main building contractor, is agreeing to pay the price stated for that work upon completion of the installation.

If a dispute arises the contract provides written evidence of what was agreed and will form the basis for a solution.

For smaller electrical jobs, a verbal contract may be agreed, but if a dispute arises there is no written evidence of what was agreed and it then becomes a matter of one person's word against another's.

Organizing and overseeing work programmes

Smaller electrical contracting firms will know where their employees are working and what they are doing from day to day because of the level of personal contact between the employer, employee and customer.

As a firm expands and becomes engaged on larger contracts, it becomes less likely that there is anyone in the firm with a complete knowledge of the firm's operations, and there arises an urgent need for sensible management and planning skills so that men and materials are on site when they are required and a healthy profit margin is maintained.

When the electrical contractor is told that he has been successful in tendering for a particular contract he is committed to carrying out the necessary work within the contract period. He must therefore consider:

- by what date the job must be finished;
- when the job must be started if the completion date is not to be delayed;
- how many men will be required to complete the contract;
- when certain materials will need to be ordered;
- when the supply authorities must be notified that a supply will be required;
- if it is necessary to obtain authorization from a statutory body for any work to commence.

In thinking ahead and planning the best method of completing the contract, the individual activities or jobs must be identified and consideration given to how the various jobs are interrelated. To help in this process a number of management techniques are available. In this chapter we will consider only two: bar charts and network analysis. The very preparation of a bar chart or network analysis forces the contractor to think deeply, carefully and logically about the particular contract, and it is therefore a very useful aid to the successful completion of the work.

Bar charts

There are many different types of bar chart used by companies but the **object of any bar chart** is to establish the sequence and timing of the various activities involved in the contract as a whole. They are a visual aid in the process of communication. In order to be useful they must be clearly understood by the people involved in the management of a contract. The chart is constructed on a rectangular basis, as shown in Fig. 3.9.

Definition

There are many different types of bar chart used by companies but the *object of any bar chart* is to establish the sequence and timing of the various activities involved in the contract as a whole.

All the individual jobs or activities which make up the contract are identified and listed separately down the vertical axis on the left-hand side, and time flows from left to right along the horizontal axis. The unit of time can be chosen to suit the length of the particular contract, but for most practical purposes either days or weeks are used.

The simple bar chart shown in Fig. 3.9(a) shows a particular activity A which is estimated to last 2 days, while activity B lasts 8 days. Activity C lasts 4 days and should be started on day 3. The remaining activities can be interpreted in the same way.

With the aid of colours, codes, symbols and a little imagination, much additional information can be included on this basic chart. For example, the actual work completed can be indicated by shading above the activity line as shown in Fig. 3.9(b) with a vertical line indicating the number of contract days completed; the activities which are on time, ahead of or behind time can easily be identified. Activity B in Fig. 3.9(b) is 2 days behind schedule, while activity D is 2 days ahead of schedule. All other activities are on time. Some activities must be completed before others can start. For example, all conduit work must be completely erected before the cables are drawn in. This is shown in Fig. 3.9(b) by activities J and K. The short vertical line between the two activities indicates that activity J must be completed before K can commence.

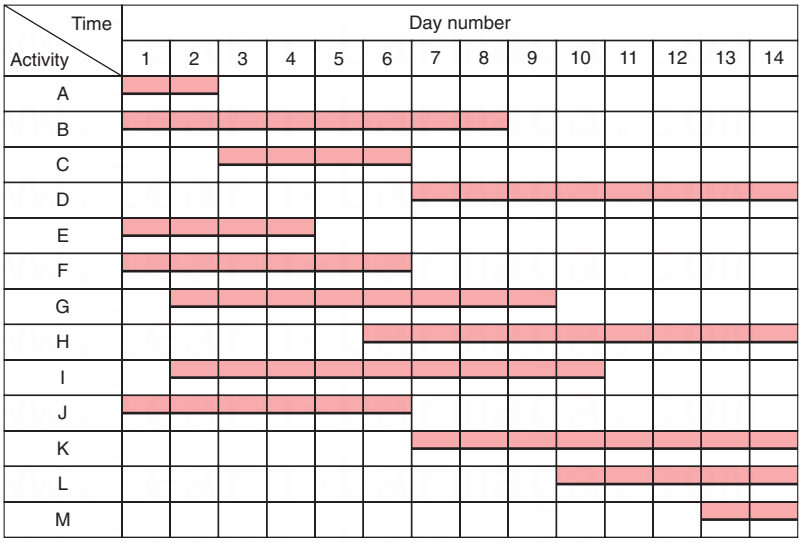

(a) A simple bar chart or schedule of work

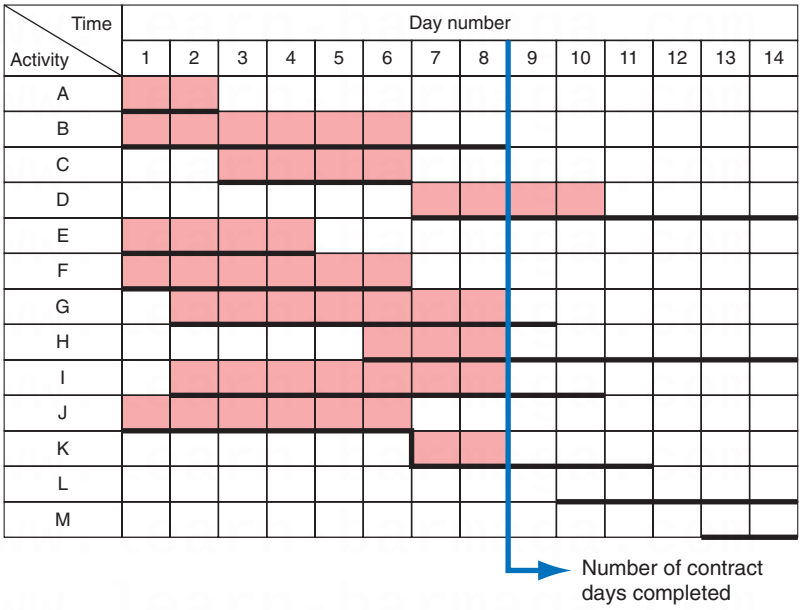

(b) A modified bar chart indicating actual work completed

Figure 3.9 Bar charts: (a) a simple bar chart or schedule of work; (b) a modified bar chart indicating actual work completed.

Useful and informative as the bar chart is, there is one aspect of the contract which it cannot display. It cannot indicate clearly the interdependence of the various activities upon each other, and it is unable to identify those activities which must strictly adhere to the time schedule if the overall contract is to be completed on time, and those activities in which some flexibility is acceptable. To overcome this limitation, in 1959 the Central Electricity Generating Board (CEGB) developed the critical path network diagram which we will now consider.

Network analysis

In large or complex contracts there are a large number of separate jobs or activities to be performed. Some can be completed at the same time, while

others cannot be started until others are completed. A **network diagram** can be used to co-ordinate all the interrelated activities of the most complex project in such a way that all sequential relationships between the various activities, and the restraints imposed by one job on another, are allowed for. It also provides a method of calculating the time required to complete an individual activity and will identify those activities which are the key to meeting the completion date, called the critical path. Before considering the method of constructing a network diagram, let us define some of the terms and conventions we shall be using.

Definition

A *network diagram* can be used to co-ordinate all the interrelated activities of the most complex project.

Critical path

Critical path is the path taken from the start event to the end event which takes the longest time. This path denotes the time required for completion of the whole contract.

Definition

Critical path is the path taken from the start event to the end event which takes the longest time.

Float time

Float time, slack time or time in hand is the time remaining to complete the contract after completion of a particular activity.

$$\text{Float time} = \text{Critical path time} - \text{Activity time}$$

The total float time for any activity is the total leeway available for all activities in the particular path of activities in which it appears. If the float time is used up by one of the early activities in the path, there will be no float left for the remaining activities and they will become critical.

Definition

Float time, slack time or time in hand is the time remaining to complete the contract after completion of a particular activity.

Activities

Activities are represented by an arrow, the tail of which indicates the commencement, and the head the completion of the activity. The length and direction of the arrows have no significance: they are not vectors or phasors. Activities require time, manpower and facilities. They lead up to or emerge from events.

Definition

Activities are represented by an arrow, the tail of which indicates the commencement, and the head the completion of the activity.

Dummy activities

Dummy activities are represented by an arrow with a dashed line. They signify a logical link only, require no time and denote no specific action or work.

Definition

Dummy activities are represented by an arrow with a dashed line.

Event

An **event** is a point in time, a milestone or stage in the contract when the preceding activities are finished. Each activity begins and ends in an event. An event has no time duration and is represented by a circle which sometimes includes an identifying number or letter.

Time may be recorded to a horizontal scale or shown on the activity arrows. For example, the activity from event A to B takes 9 hours in the network diagram shown in Fig. 3.10.

Definition

An *event* is a point in time, a milestone or stage in the contract when the preceding activities are finished.

Example 1

Identify the three possible paths from the start event A to the finish event F for the contract shown by the network diagram in Fig. 3.10. Identify the critical path and the float time in each path.

The three possible paths are:

1 event A–B–D–F
2 event A–C–D–F
3 event A–C–E–F

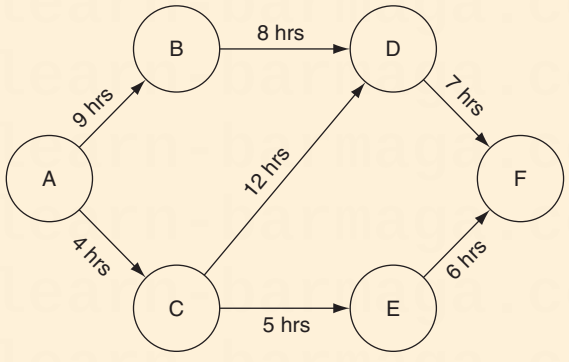

Figure 3.10 A network diagram for Example 1.

The times taken to complete these activities are:

1 path A–B–D–F = 9 + 8 + 7 = 24 hours
2 path A–C–D–F = 4 + 12 + 7 = 23 hours
3 path A–C–E–F = 4 + 5 + 6 = 15 hours

The longest time from the start event to the finish event is 24 hours, and therefore the critical path is A – B – D – F.

The float time is given by:

$$\text{Float time} = \text{Critical path} - \text{Activity time}$$

For path 1, A–B–D–F,

$$\text{Float time} = 24 \text{ hours} - 24 \text{ hours} = 0 \text{ hours}$$

There can be no float time in any of the activities which form a part of the critical path since a delay on any of these activities would delay completion of the contract. On the other two paths some delay could occur without affecting the overall contract time.

For path 2, A – C – D – F,

$$\text{Float time} = 24 \text{ hours} - 23 \text{ hours} = 1 \text{ hour}$$

For path 3, A–C–E–F,

$$\text{Float time} = 24 \text{ hours} - 15 \text{ hours} = 9 \text{ hours}$$

Example 2

Identify the time taken to complete each activity in the network diagram shown in Fig. 3.11. Identify the three possible paths from the start event A to the final event G and state which path is the critical path.

The time taken to complete each activity using the horizontal scale is:

activity A–B = 2 days
activity A–C = 3 days
activity A–D = 5 days
activity B–E = 5 days
activity C–F = 5 days
activity E–G = 3 days
activity D–G = 0 days
activity F–G = 0 days

Activities D – G and F – G are dummy activities which take no time to complete but indicate a logical link only. This means that in this case once the activities preceding events D and F have been completed, the contract will not be held up by work associated with these particular paths and they will progress naturally to the finish event.

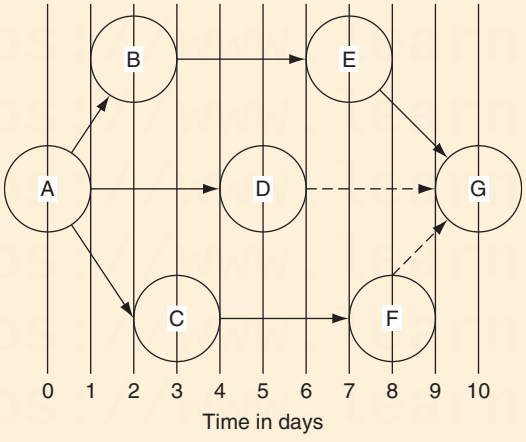

Figure 3.11 A network diagram for Example 2.

The three possible paths are:

1 A–B–E–G
2 A–D–G
3 A–C–F–G

The times taken to complete the activities in each of the three paths are:

path 1, A–B–E–G = 2 + 5 + 3 = 10 days
path 2, A–D–G = 5 + 0 = 5 days
path 3, A–C–F–G = 3 + 5 + 0 = 8 days

The critical path is path 1, A–B–E–G.

Constructing a network

The first step in constructing a network diagram is to identify and draw up a list of all the individual jobs, or activities, which require time for their completion and which must be completed to advance the contract from start to completion.

The next step is to build up the arrow network showing schematically the precise relationship of the various activities between the start and end event. The designer of the network must ask these questions:

1. Which activities must be completed before others can commence? These activities are then drawn in a similar way to a series circuit but with event circles instead of resistor symbols.
2. Which activities can proceed at the same time? These can be drawn in a similar way to parallel circuits but with event circles instead of resistor symbols.

Commencing with the start event at the left-hand side of a sheet of paper, the arrows representing the various activities are built up step by step until the final event is reached. A number of attempts may be necessary to achieve a well-balanced and symmetrical network diagram showing the best possible flow of work and information, but this time is well spent when it produces a diagram which can be easily understood by those involved in the management of the particular contract.

Example 3

A particular electrical contract is made up of activities A – F as described below:

A = an activity taking 2 weeks commencing in week 1
B = an activity taking 3 weeks commencing in week 1
C = an activity taking 3 weeks commencing in week 4
D = an activity taking 4 weeks commencing in week 7
E = an activity taking 6 weeks commencing in week 3
F = an activity taking 4 weeks commencing in week 1

Certain constraints are placed on some activities because of the availability of men and materials and because some work must be completed before other work can commence as follows:

Activity C can only commence when B is completed
Activity D can only commence when C is completed
Activity E can only commence when A is completed
Activity F does not restrict any other activity

(a) Produce a simple bar chart to display the activities of this particular contract.
(b) Produce a network diagram of the programme and describe each event.
(c) Identify the critical path and the total contract time.
(d) State the maximum delay which would be possible on activity E without delaying the completion of the contract.
(e) State the float time in activity F.

(*Continued*)

Example 3 (Continued)

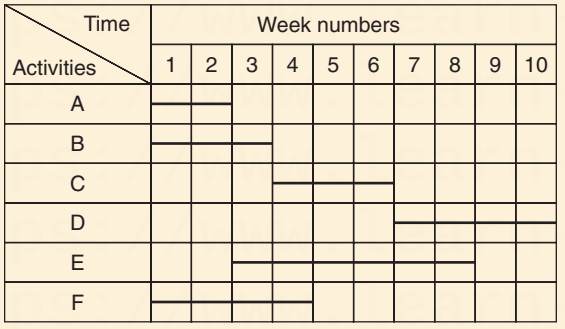

(a)

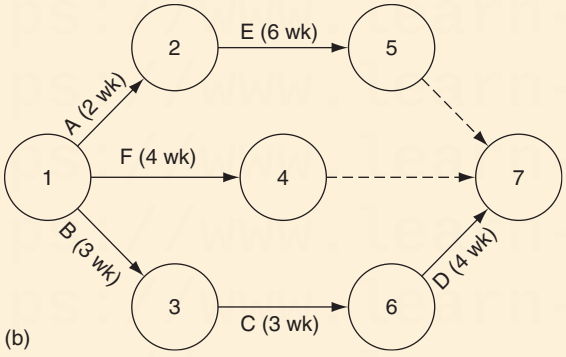

(b)

Figure 3.12 (a) Bar chart and (b) network diagram for Example 3.

(a) A simple bar chart for this contract is shown in Fig. 3.12(a).

(b) The network diagram is shown in Fig. 3.12(b). The events may be described as follows:

Event 1 = the commencement of the contract

Event 2 = the completion of activity A and the commencement of activity E

Event 3 = the completion of activity B and the commencement of activity C

Event 4 = the completion of activity F

Event 5 = the completion of activity E

Event 6 = the completion of activity C

Event 7 = the completion of activity D and the whole contract.

(c) There are three possible paths:

1 via events 1 − 2 − 5 − 7

2 via events 1 − 4 − 7

3 via events 1 − 3 − 6 − 7.

The time taken for each path is:

path 1 = 2 weeks + 6 weeks = 8 weeks

path 2 = 4 weeks = 4 weeks

path 3 = 3 weeks + 3 weeks + 4 weeks = 10 weeks.

The critical path is therefore path 3, via events 1 − 3 − 6 − 7, and the total contract time is 10 weeks.

(d) We have that:

Float time = Critical path time − Activity time

(Continued)

Example 3 (Continued)

Activity E is on path 1 via events 1 – 2 – 5 – 7 having a total activity time of 8 weeks

Float time = 10 weeks – 8 weeks = 2 weeks.

Activity E could be delayed for a maximum of 2 weeks without delaying the completion date of the whole contract.

(e) Activity F is on path 2 via events 1 – 4 – 7 having a total activity time of 4 weeks

Float time = 10 weeks – 4 weeks = 6 weeks.

Reports

On large jobs, the foreman or supervisor is often required to keep a report of the relevant events which happen on the site – for example, how many people from your company are working on site each day, what goods were delivered, whether there were any breakages or accidents, and records of site meetings attended. Some firms have two separate documents, a site diary to record daily events and a weekly report which is a summary of the week's events extracted from the site diary. The site diary remains on site and the weekly report is sent to head office to keep managers informed of the work's progress.

Personal communications

Remember that it is the customers who actually pay the wages of everyone employed in your company. You should always be polite and listen carefully to their wishes. They may be elderly or of a different religion or cultural background than you. In a domestic situation, the playing of loud music on a radio may not be approved of. Treat the property in which you are working with the utmost care. When working in houses, shops and offices use dust sheets to protect floor coverings and furnishings. Clean up periodically and make a special effort when the job is completed.

Dress appropriately: an unkempt or untidy appearance will encourage the customer to think that your work will be of poor quality.

The electrical installation in a building is often carried out alongside other trades. It makes good sense to help other trades where possible and to develop good working relationships with other employees. The customer will be most happy if the workers give an impression of working together as a team for the successful completion of the project.

Finally, remember that the customer will probably see more of the electrician and the electrical trainee than the managing director of your firm and, therefore, the image presented by you will be assumed to reflect the policy of the company. You are, therefore, your company's most important representative. Always give the impression of being capable and in command of the situation, because this gives customers confidence in the company's ability to meet their needs. However, if a problem does occur which is outside your previous experience and you do not feel confident to solve it successfully, then contact your supervisor for professional help and guidance. It is not unreasonable for a young member of the company's team to seek help and guidance from those employees with more

experience. This approach would be preferred by most companies rather than having to meet the cost of an expensive blunder.

Construction site – safe working practice

In Chapter 1 we looked at some of the laws and regulations that affect our working environment. We looked at safety signs and personal protective equipment (PPE), and how to recognize and use different types of fire extinguishers. The structure of companies within the electrotechnical industry and the ways in which they communicate information by drawings, symbols and standard forms was discussed earlier in this chapter.

If your career in the electrotechnical industry is to be a long, happy and safe one, you must always wear appropriate PPE such as footwear, and head protection and behave responsibly and sensibly in order to maintain a safe working environment. Before starting work, make a safety assessment; what is going to be hazardous, will you require PPE, do you need any special access equipment?

Construction sites can be hazardous because of the temporary nature of the construction process. The surroundings and systems are always changing as the construction process moves to its completion date when everything is finally in place.

Safe methods of working must be demonstrated by everyone at every stage. 'Employees have a duty of care to protect their own health and safety and that of others who might be affected by their work activities'.

To make the work area safe before starting work and during work activities, it may be necessary to:

- use barriers or tapes to screen off potential hazards,
- place warning signs as appropriate,
- inform those who may be affected by any potential hazard,
- use a safe isolation procedure before working on live equipment or circuits,
- obtain any necessary 'permits to work' before work begins.

Try this

Communications

Make a list of all the different types of standard forms which your employer uses. Let me start the list for you with 'Time Sheets'.

Get into the habit of always working safely and being aware of the potential hazards around you when you are working.

Having chosen an appropriate wiring system which meets the intended use and structure of the building and satisfies the environmental conditions of the installation, you must install the system conductors, accessories and equipment in a safe and competent manner.

The structure of the building must be made good if it is damaged during the installation of the wiring system. For example, where conduits and trunking are run through walls and floors.

All connections in the wiring system must be both electrically and mechanically sound. All conductors must be chosen so that they will carry the design current under the installed conditions.

If the wiring system is damaged during installation it must be made good to prevent future corrosion. For example, where galvanized conduit trunking or tray is cut or damaged by pipe vices, it must be made good to prevent localized corrosion.

All tools must be used safely and sensibly. Cutting tools should be sharpened and screwdrivers ground to a sharp square end on a grindstone.

It is particularly important to check that the plug top and cables of hand held electrically powered tools and extension leads are in good condition. Damaged plug tops and cables must be repaired before you use them. All electrical power tools of 110 and 230 V must be tested with a portable appliance tester (PAT) in accordance with the company's health and safety procedures, but probably at least once each year.

Tools and equipment that are left lying about in the workplace can become damaged or stolen and may also be the cause of people slipping, tripping or falling. Tidy up regularly and put power tools back in their boxes. You personally may have no control over the condition of the workplace in general, but keeping your own work area clean and tidy is the mark of a skilled and conscientious craftsman.

Finally, when the job is finished, clean up and dispose of all waste material responsibly as described in Chapter 1.

Check your understanding

When you have completed the questions, check out the answers at the back of the book.

Note: more than one multiple choice answer may be correct.

1 Identify the industry standards and regulations in the list below:
   a. Management of Health and Safety Regulations
   b. Data Protection Act
   c. Construction Design and Management
   d. Sex Discrimination Act.

2 Identify the laws protecting people in the list below:
   a. Management of Health and Safety Regulations
   b. Data Protection Act
   c. Construction, Design and Management
   d. Sex Discrimination Act.

3 A standard form completed by every employee to inform the employer of the time spent working on a particular site is called:
   a. job sheet
   b. time sheet
   c. delivery note
   d. daywork sheet.

4 A record that confirms that materials ordered have been delivered to site is called:
   a. job sheet
   b. time sheet
   c. delivery note
   d. daywork sheet.

5 A standard form containing information about work to be done usually distributed by a manager to an electrician is called:
   a. job sheet
   b. time sheet
   c. delivery note
   d. daywork sheet.

6 A standard form which records changes or extra work on a large project is called a:
   a. job sheet
   b. time sheet
   c. delivery note
   d. daywork sheet.

7 Use bullet points to identify the risks that will require a formal assessment as required by the Management of Health and Safety at Work Regulations.

8 State four requirements of the Construction (Health, Safety and Welfare) Regulations for construction sites.

9 Sketch and label six graphical symbols for equipment or accessories that you have used in your training so far.

10 State ten benefits or entitlements that are your right as an employee as defined by the Employment Rights Act.

11 How does the Data Protection Act protect our privacy?

12 What rights do we as data subjects have according to the Data Protection Act?

13 What do we mean by 'being discriminated against'?

14 State what you believe to be the ten most important human rights.

15 How does a bar chart help with the organization of a work programme?

16 State five methods of making your work area safe on a construction site.

17 Why are good relationships important between yourself and the customer and other trades on site when carrying out work activities?

18 Briefly state why time sheets, fully and accurately completed, are important to:
   a. an employer
   b. an employee

19 State the reasons why you should always present the right image to a client, customer or his representative.

20 Briefly describe what we mean by a schedule of work. Who would use a bar chart or schedule of work in your company and why?

CHAPTER 4

Electrical supply systems, earthing arrangements and protective devices

Unit 304 of the City and Guilds 2357 syllabus

Understanding the principles of planning and selection for the installation of electrotechnical equipment and systems in buildings, structures and the environment.

Online Material

This chapter has free associated content, including animations and instructional videos, to support your learning

When you see the logo, visit the website below to access this material:

www.elsevierdirect.com/companions/9780080966281

Electricity supplies

Electricity is generated in modern power stations at 25 kV and fed through transformers to the consumer over a complex network of cables known as the national grid system. This is a network of cables, mostly at a very high voltage, suspended from transmission towers, linking together the 175 power stations and millions of consumers. There are approximately 5,000 miles of high-voltage transmission lines in England and Wales, running mostly through the countryside.

Man-made structures erected in rural areas often give rise to concern, but every effort is made to route the overhead lines away from areas where they might spoil a fine view. There is full consultation with Local Authorities and interested parties as to the route which lines will take. Farmers are paid a small fee for having transmission line towers on their land. Over the years many different tower designs and colours have been tried, but for the conditions in the United Kingdom, galvanized steel lattice towers are considered the least conspicuous and most efficient.

Basic Electrical Installation Work. 978-0-08-096628-1

For those who consider transmission towers unsightly, the obvious suggestion might be to run all cables underground. In areas of exceptional beauty this is done, but underground cables are about 16 times more expensive than the equivalent overhead lines. The cost of running the largest lines underground is about £8 million per mile compared with about £500,000 overhead. On long transmission lines the losses can be high, but by raising the operating voltage and therefore reducing the current for a given power, the I^2R losses are reduced, the cable diameter is reduced and the overall efficiency of transmission is increased. In order to standardize equipment, standard voltages are used. These are:

- 400 and 275 kV for the super grid
- 132 kV for the original grid
- 66 and 33 kV for secondary transmission
- 11 kV for high-voltage distribution
- 400 V for commercial consumer supplies
- 230 V for domestic consumer supplies.

A diagrammatic representation showing the distribution of power from the power station to the consumer is given in Fig. 4.7.

All local distribution in the United Kingdom is by underground cables from sub-stations placed close to the load centre and supplied at 11 kV. Transformers in these local sub-stations reduce the voltage to 400 V, three-phase and neutral distributor cables connect this supply to consumers. Connecting to one-phase and neutral of a three-phase 400 V supply gives a 230 V single-phase supply suitable for domestic consumers.

When single-phase loads are supplied from a three-phase supply, the load should be 'balanced' across the phases. That is, the load should be equally distributed across the three phases so that each phase carries approximately the same current. This prevents any one phase being overloaded.

Safe electrical installations

The provision of a safe electrical system is fundamental to the whole concept of using electricity in and around buildings safely. The electrical installation as a whole must be protected against overload and short circuit damage and the people using the installation must be protected against electric shock. An installation that meets the requirements of the IEE Wiring Regulations Requirements for Electrical Installations, will be so protected. The method most universally used in the United Kingdom to provide for the safe use of electrical energy is Basic Protection and Fault Protection as described in Chapter 41 of the IEE Regulations. So, let us look at these essential safety elements.

The consumer's mains equipment is normally fixed close to the point at which the supply cable enters the building. To meet the requirements of the IEE Regulations it must provide:

- protection against electric shock (Chapter 41)
- protection against overcurrent (Chapter 43)
- isolation and switching (Chapter 53).

Protection against electric shock, both 'basic protection' and 'fault protection' is provided by insulating and placing live parts out of reach in suitable enclosures,

earthing and bonding metalwork and providing fuses or circuit breakers so that the supply is automatically disconnected under fault conditions.

To provide **overcurrent protection** it is necessary to provide a device which will disconnect the supply automatically before the overload current can cause a rise in temperature which would damage the installation. A fuse or MCB would meet this requirement.

An **isolator** is a mechanical device which is operated manually and is provided so that the whole of the installation, one circuit or one piece of equipment may be cut off from the live supply. In addition, a means of switching off for maintenance or emergency switching must be provided. A switch may provide the means of isolation, but an isolator differs from a switch in that it is intended to be opened when the circuit concerned is not carrying current. Its purpose is to ensure the safety of those working on the circuit by making dead those parts which are live in normal service. One device may provide both isolation and switching provided that the characteristics of the device meet the regulations for both functions. The switching of electrically operated equipment in normal service is referred to as **functional switching**.

Circuits are controlled by switchgear which is assembled so that the circuit may be operated safely under normal conditions, isolated automatically under fault conditions, or isolated manually for safe maintenance. These requirements are met by good workmanship carried out by competent persons and the installation of approved British Standard materials such as switches, isolators, fuses or circuit breakers (IEE Regulation 131.1.1). The equipment belonging to the supply authority is sealed to prevent unauthorized entry, because if connection were made to the supply before the meter, the energy used by the consumer would not be recorded on the meter. Figure 4.1 shows the connections and equipment at a domestic service position.

Protective electrical bonding to earth

The purpose of the bonding regulations is to keep all the exposed metalwork of an installation at the same earth potential as the metalwork of the electrical installation, so that no currents can flow and cause an electric shock. For a current to flow there must be a difference of potential between two points, but if the points are joined together there can be no potential difference. This bonding or linking together of the exposed metal parts of an installation is known as 'protective equipotential bonding' and gives protection against electric shock.

Let us now define some of the important new words as they apply to electrical installations.

Earthing is the connection of the exposed conductive parts of an electrical installation to the main protective earthing terminal of the installation.

Bonding is the linking together of the exposed or extraneous metal parts of an electrical installation for the purpose of safety.

Exposed conductive parts are the metalwork of the electrical installation: the conduit, trunking, metal boxes and equipment that make up the electrical installation.

Extraneous conductive parts are the other metal parts which do not form a part of the electrical installation: the structural steelwork of the building, gas, water and central heating pipes and radiators.

Definition

To provide *overcurrent protection* it is necessary to provide a device which will disconnect the supply automatically before the overload current can cause a rise in temperature which would damage the installation. A fuse or MCB would meet this requirement.

Definition

An *isolator* is a mechanical device which is operated manually and is provided so that the whole of the installation, one circuit or one piece of equipment may be cut off from the live supply.

Definition

The switching of electrically operated equipment in normal service is referred to as *functional switching*.

Definition

Earthing is the connection of the exposed conductive parts of an electrical installation to the main protective earthing terminal of the installation.

Definition

Bonding is the linking together of the exposed or extraneous metal parts of an electrical installation for the purpose of safety.

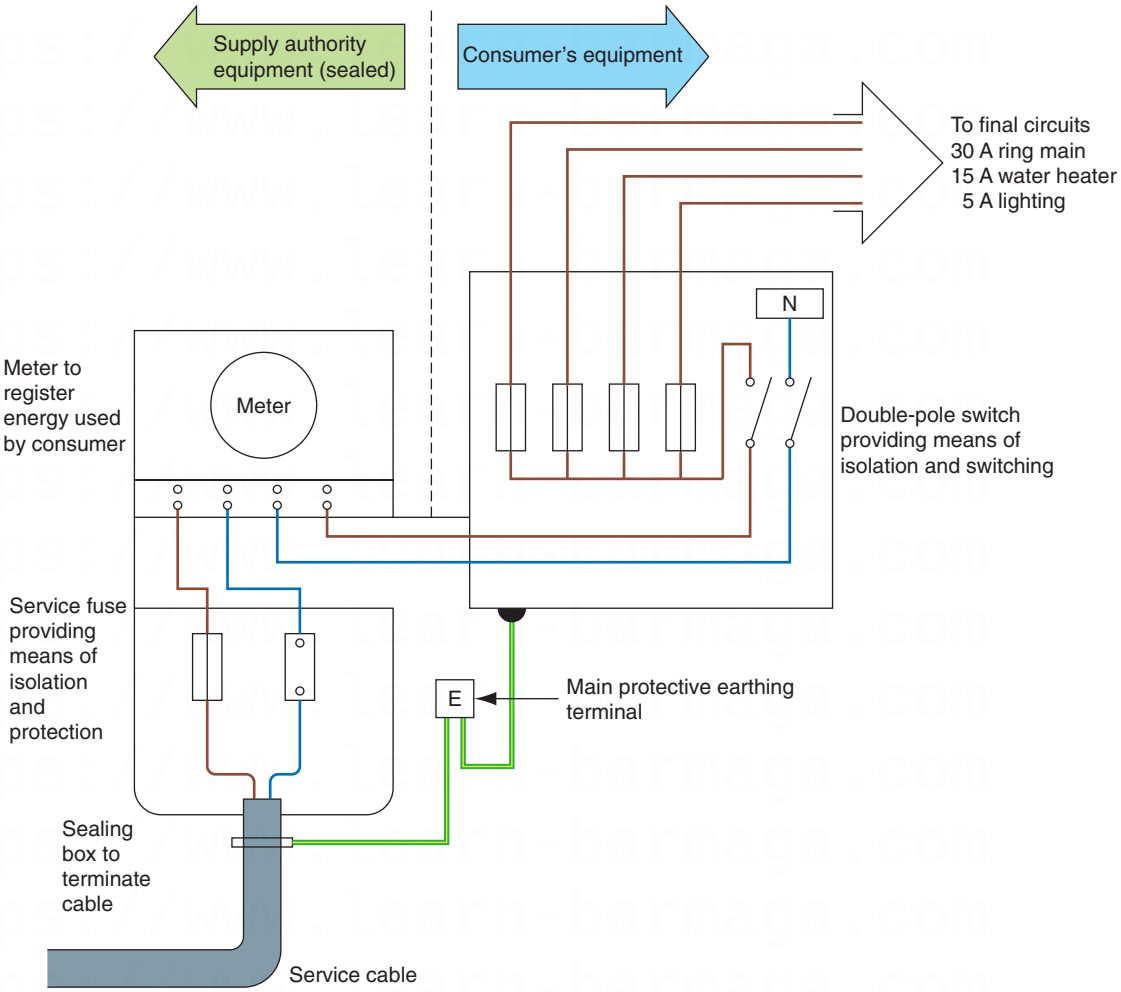

Figure 4.1 Simplified diagram of connections and equipment at a domestic service position.

Definition

Exposed conductive parts are the metalwork of the electrical installation: the conduit, trunking, metal boxes and equipment that make up the electrical installation.

Basic protection is protection against electric shock under fault free conditions and is provided by insulating live parts in accordance with section 416 of the IEE Regulations.

Fault protection is protection against electric shock under single fault conditions and is provided by protective equipotential bonding and automatic disconnection of the supply (by a fuse or MCB) in accordance with IEE Regulations 411.3 to 6.

Protection from electric shock is provided by basic protection and fault protection.

Protective equipotential bonding is equipotential bonding for the purpose of safety.

Definition

Extraneous conductive parts are the other metal parts which do not form a part of the electrical installation: the structural steelwork of the building, gas, water and central heating pipes and radiators.

Try this

Memory Aid

- Writing out important definitions helps you to remember them.

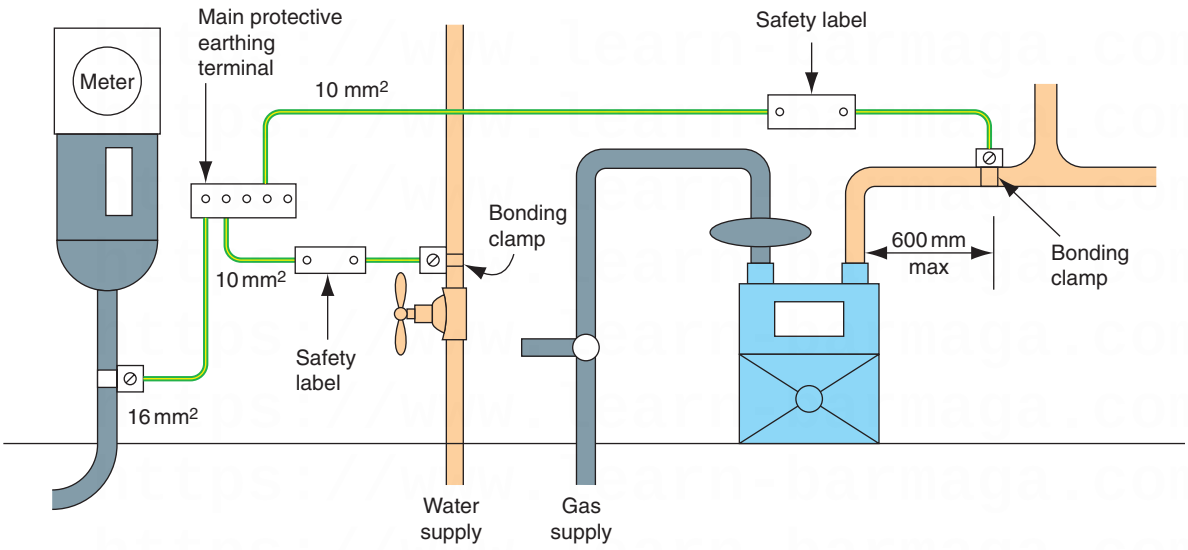

Figure 4.2 Protective equipotential bonding of gas and water supplies.

Protective equipotential bonding

Where earthed electrical equipment may come into contact with the metalwork of other services, they too must be effectively connected to the main protective earthing terminal of the installation (IEE Regulation 411.3.1.2).

Other services are described as:

- main water pipes
- main gas pipes
- other service pipes and ducting
- central heating and air conditioning systems
- exposed metal parts of the building structure
- lightning protective conductors

Protective equipotential bonding should be made to gas and water services at their point of entry into the building, as shown in Fig. 4.2, using insulated bonding conductors of not less than half the cross-section of the incoming main earthing conductor. The minimum permitted size is 6 mm^2 but the cross-section need not exceed 25 mm^2 (IEE Regulation 544.1.2). The bonding clamp must be fitted on the consumer's side of the gas meter between the outlet union, before any branch pipework but within 600 mm of the meter (IEE Regulation 544.1.3).

A permanent label must also be fixed in a visible position at or near the point of connection of the bonding conductor with the words 'Safety Electrical Connection – Do Not Remove' (IEE Regulation 514.13.1). Supplementary bonding is described in Chapter 8 of this book.

Definition

Basic protection is protection against electric shock under fault free conditions and is provided by insulating live parts in accordance with section 416 of the IEE Regulations.

Definition

Fault protection is protection against electric shock under single fault conditions and is provided by protective equipotential bonding and automatic disconnection of the supply (by a fuse or MCB) in accordance with IEE Regulations 411.3 to 6.

Definition

Protective equipotential bonding is equipotential bonding for the purpose of safety.

Electrical shock and overload protection

Electric shock is normally caused either by touching a conductive part that is normally live, or by touching an exposed conductive part made live by a fault. The touch voltage curve in Fig. 4.3 shows that a person in contact with 230 V must be released from this danger in 40 ms if harmful effects are to be avoided. Similarly, a person in contact with 400 V must be released in 15 ms to avoid being harmed.

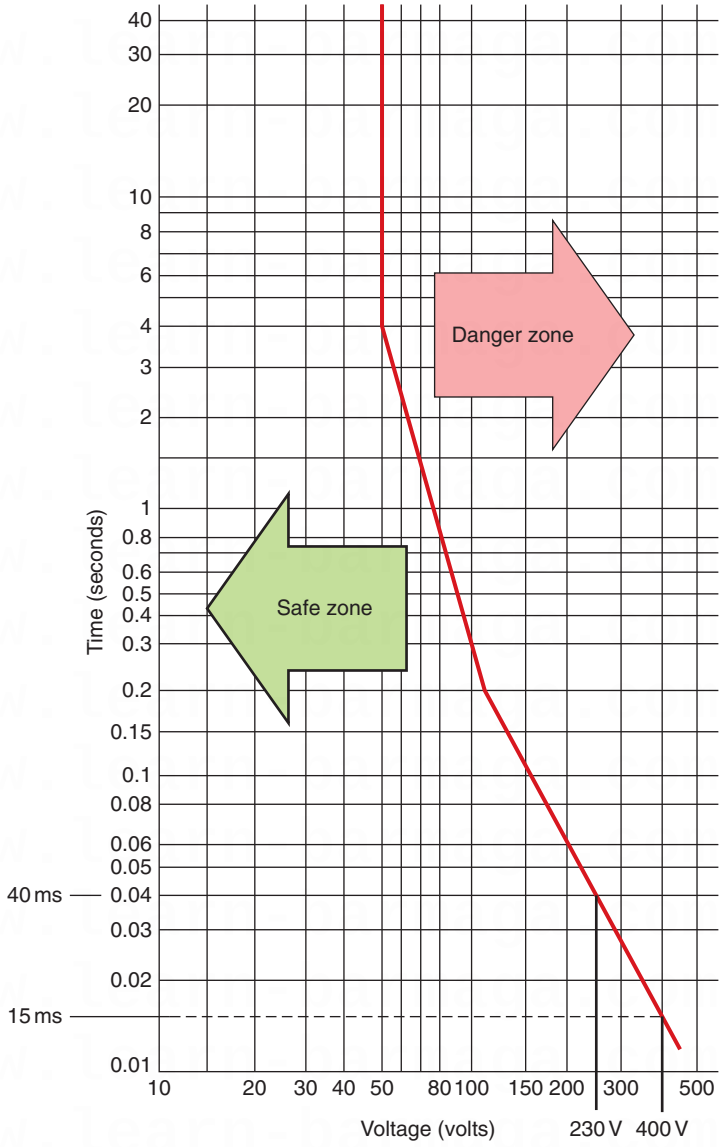

Figure 4.3 Touch voltage curve.

In general, protection against touching live parts is achieved by insulating live parts and is called 'basic protection'. Protection against touching something made live as a result of a fault, and called 'fault protection' (IEE Regulation 131.2.2), is achieved by protective equipotential bonding and automatic disconnection of the supply in the event of a fault occurring. Separated extra low-voltage supplies (SELV) provide protection against both 'basic' and 'fault' protection.

Part 4 of the IEE Regulations deals with the application of protective measures for safety and Chapter 53 with the regulations for switching devices or switchgear required for protection, isolation and switching of a consumer's installation.

The consumer's main switchgear must be readily accessible to the consumer and be able to:

- isolate the complete installation from the supply
- protect against overcurrent
- cut off the current in the event of a serious fault occurring.

Protection against overcurrent

Excessive current may flow in a circuit as a result of an overload or a short circuit. An overload or overcurrent is defined as a current which exceeds the rated value in an otherwise healthy circuit. A short circuit is an overcurrent resulting from a fault of negligible impedance between live conductors having a difference in potential under normal operating conditions. Overload currents usually occur in a circuit because it is abused by the consumer or because it has been badly designed or modified by the installer. Short circuits usually occur as a result of an accident which could not have been predicted before the event.

An overload may result in currents of two or three times the rated current flowing in the circuit, while short circuit currents may be hundreds of times greater than the rated current. In both cases, the basic requirement for protection is that the circuit should be interrupted before the fault causes a temperature rise which might damage the insulation, terminations, joints or the surroundings of the conductors. If the device used for overload protection is also capable of breaking a prospective short circuit current safely, then one device may be used to give protection from both faults (IEE Regulation 432.1). Devices which offer protection from overcurrent are:

- semi-enclosed fuses manufactured to BS 3036
- cartridge fuses manufactured to BS 1361 and BS 1362
- high breaking capacity fuses (HBC fuses) manufactured to BS 88
- MCBs manufactured to BS EN 60898.

We will look at overcurrent protection, fuses and MCBs in more detail later in this chapter.

Definition

An *overload* or *overcurrent* is defined as a current which exceeds the rated value in an otherwise healthy circuit. A short circuit is an overcurrent resulting from a fault of negligible impedance.

Key fact

Fuses

How does a fuse work?

- under fault conditions excessive current flows
- the fuse element gets hot
- the fuse element melts
- disconnecting the circuit it protected.

Generation, transmission and distribution of electricity

Generation

Figure 9.5 of Chapter 9 shows a simple a.c. generator or alternator producing an a.c. waveform. We generate electricity in large modern power stations using the same basic principle of operation. However, in place of a single loop of wire, the power station alternator has a three-phase winding and powerful electromagnets. The generated voltage is three identical sinusoidal waveforms each separated by 120° as shown in Fig. 4.4. The prime mover is not, of course, a simple crank handle, but a steam turbine. Hot water is heated until it becomes superheated steam, which drives the vanes of a steam turbine which is connected to the alternator. The heat required to produce the steam may come from burning coal or oil or from a nuclear reactor. Whatever the primary source of energy is, it is only being used to drive a turbine which is connected to an alternator, to generate electricity.

Safety first

Bonding

- bonding clamps must be of an approved type
- must be fitted to clean pipework
- must be tight and secure
- must have a visible label
- IEE Regulation 514.13.1.

Transmission

Electricity is generated in the power station alternator at 25 kV. This electrical energy is fed into a transformer to be stepped up to a very high voltage for transmission on the national grid network at 400 kV, 275 kV or 132 kV. These very high voltages are necessary because, for a given power, the current is greatly reduced, which means smaller grid conductors and the transmission losses are reduced.

Key fact

Information

The individual conductors on the national grid network are only about 2.5 cm in diameter because they operate at a very high voltage.

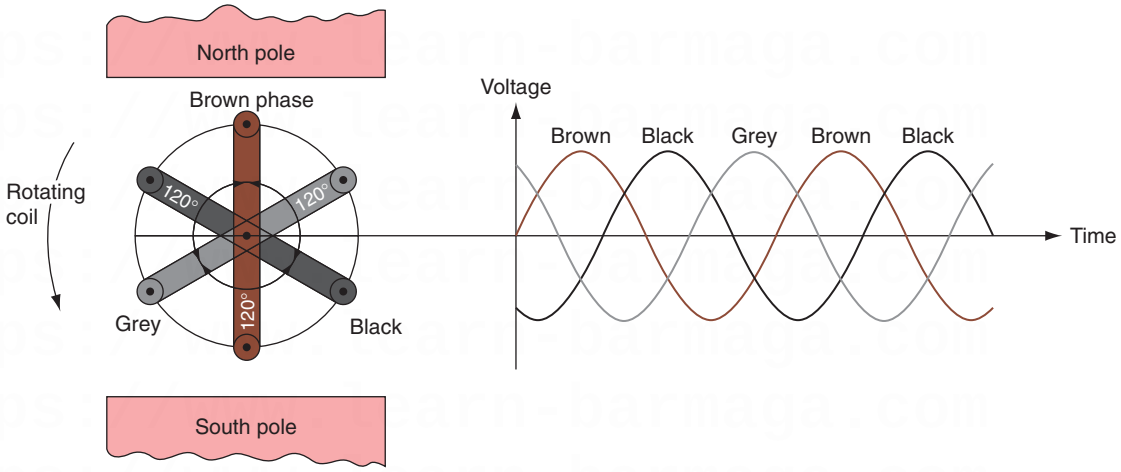

Figure 4.4 Generation of a three-phase voltage.

Figure 4.5 Transmission line steel pylon.

The national grid network consists of over 5,000 miles of overhead aluminium conductors suspended from steel pylons which link together all the power stations. Environmentalists say that these steel towers are ugly, but this method is about 16 times cheaper than the equivalent underground cable at these high voltages. Figure 4.5 shows a transmission line steel pylon.

Electricity is taken from the national grid by appropriately located sub-stations which eventually transform the voltage down to 11 kV at a local sub-station. At the local sub-station the neutral conductor is formed for single-phase domestic supplies and three-phase supplies to shops, offices and garages. These supplies are usually underground radial supplies from the local sub-station, but in rural areas we still see transformers and overhead lines suspended on wooden poles. Figures 4.6 and 4.7 give an overview of the system from power station to consumer.

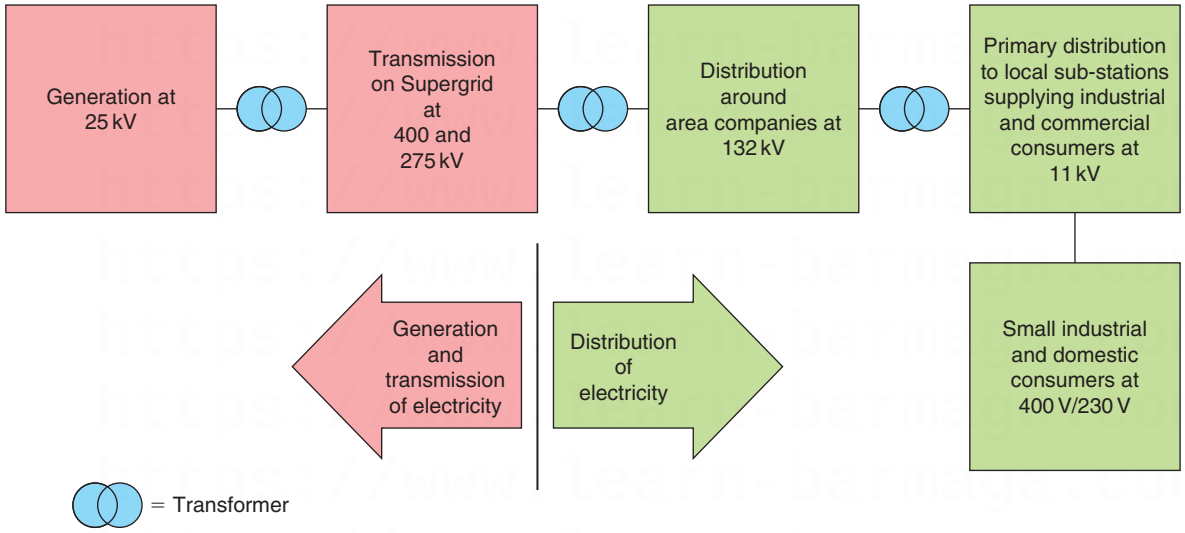

Figure 4.6 Generation, transmission and distribution of electrical energy.

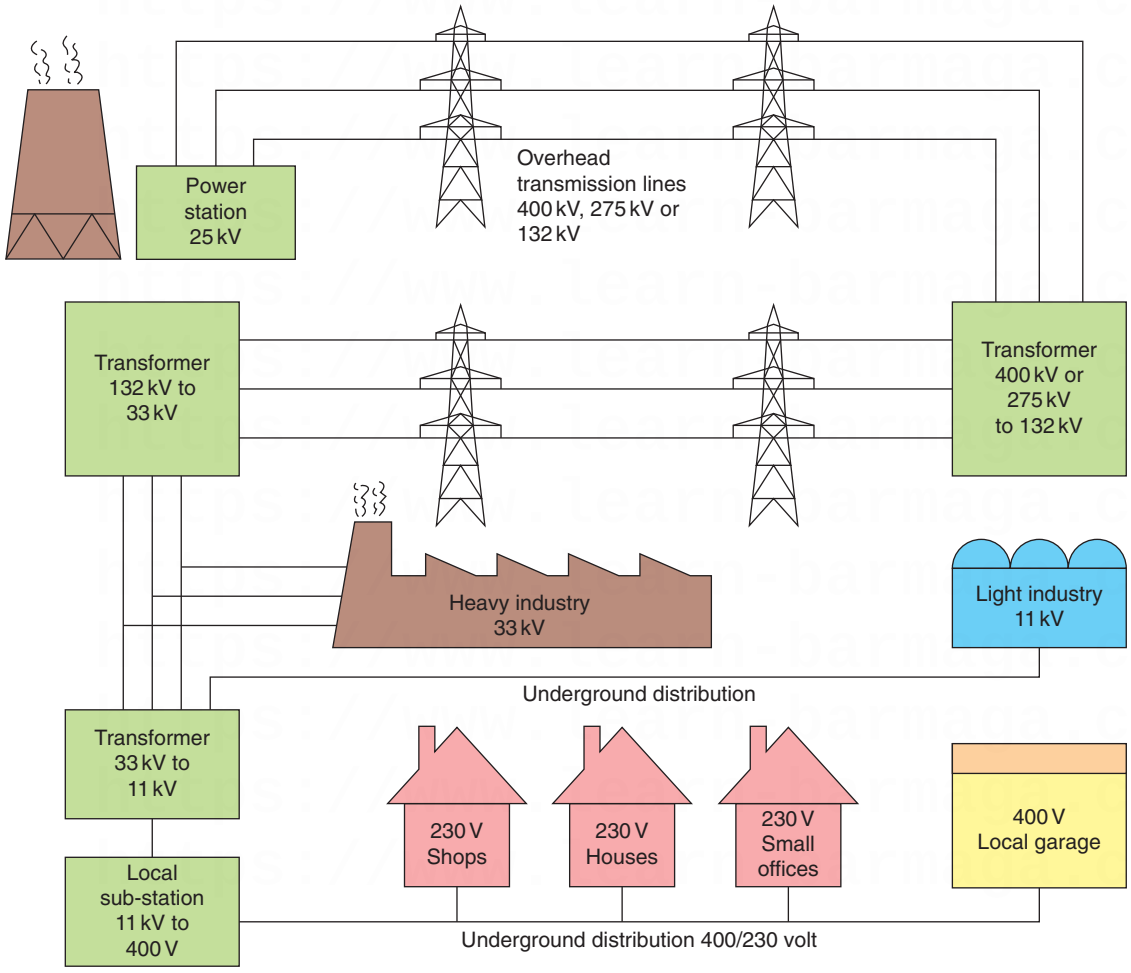

Figure 4.7 Simplified diagram of the distribution of electricity from power station to consumer.

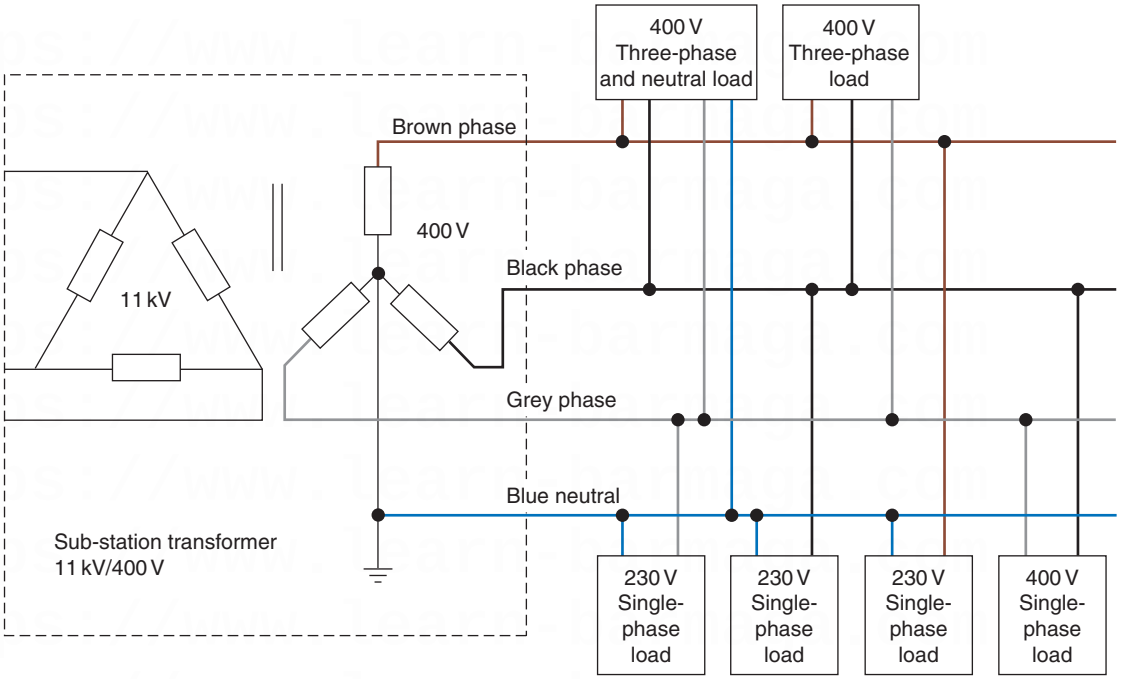

Figure 4.8 Three-phase four-wire distribution.

Distribution to the consumer

The electricity leaves the local sub-station and arrives at the consumer's mains intake position. The final connections are usually by simple underground radial feeders at 400 V/230 V. Underground cable distribution is preferred within a city, town or village because people find the overhead distribution, which we see in rural and remote areas, unsightly. Also, at these lower distribution voltages, the cost of underground cables is not prohibitive. The 400 V/230 V is derived from the 11 kV/400 V sub-station transformer by connecting the secondary winding in star as shown in Fig. 4.8. The star point is earthed to an earth electrode sunk into the ground below the sub-station and from this point is taken the fourth conductor, and the neutral. Loads connected between phases are fed at 400 V and those fed between one phase and neutral at 230 V. A three-phase 400 V supply is used for supplying small industrial and commercial loads such as garages, schools and blocks of flats. A single-phase 230 V supply is usually provided for individual domestic consumers.

At the mains intake position, the supplier will provide a sealed HBC fuse and a sealed energy meter to measure the consumer's electricity consumption. It is after this point that we reach the consumer's installation.

Balancing single-phase loads

A three-phase load such as a motor has equally balanced phases since the resistance of each phase winding will be the same. Therefore, the current taken by each phase will be equal. When connecting single-phase loads to a three-phase supply, care should be taken to distribute the single-phase loads equally across the three phases so that each phase carries approximately the same current. Equally distributing the single-phase loads across the three-phase

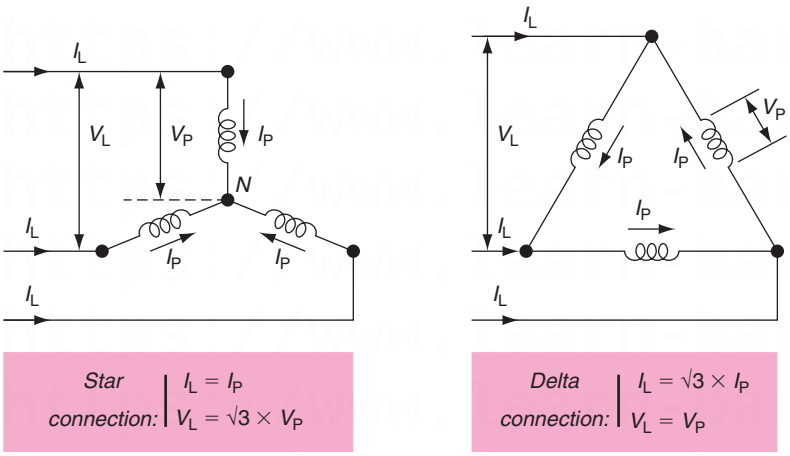

Figure 4.9 Star and delta connections.

supply is known as 'balancing' the load. A lighting load of 18 luminaires would be 'balanced' if six luminaires were connected to each of the three phases.

Star and delta connections

The three-phase windings of an a.c. generator may be star connected or delta connected as shown in Fig. 4.9. The important relationship between phase and line currents and voltages is also shown. The square root of 3 ($\sqrt{3}$) is simply a constant for three-phase circuits, and has a value of 1.732. The delta connection is used for electrical power transmission because only three conductors are required. Delta connection is also used to connect the windings of most three-phase motors because the phase windings are perfectly balanced and, therefore, do not require a neutral connection.

Making a star connection at the local sub-station has the advantage that two voltages become available – a line voltage of 400 V between any two phases, and a phase voltage of 230 V between line and neutral which is connected to the star point.

In any star-connected system currents flow along the lines (I_L), through the load and return by the neutral conductor connected to the star point. In a *balanced* three-phase system all currents have the same value and when they are added up by phasor addition, we find the resultant current is zero. Therefore, no current flows in the neutral and the star point is at zero volts. The star point of the distribution transformer is earthed because earth is also at zero potential. A star-connected system is also called a three-phase four-wire system and allows us to connect single-phase loads to a three-phase system.

Three-phase power

We know from our single-phase alternating current theory in Chapter 9 that power can be found from the following formula:

$$\text{Power} = VI \cos\phi \text{ (W)}$$

In any balanced three-phase system, the total power is equal to three times the power in any one phase.

$$\therefore \text{ Total three-phase power } = 3V_P I_P \cos\phi \text{ (W)} \qquad \text{(Equation 1)}$$

Now for a star connection,

$$V_P = \frac{V_L}{\sqrt{3}} \quad \text{and} \quad I_L = I_P \qquad \text{(Equation 2)}$$

Substituting Equation (2) into Equation (1), we have:

$$\text{Total three-phase power } = \sqrt{3}\, V_L L_L \cos\phi \text{ (W)}$$

Now consider a delta connection:

$$V_P = V_L \quad \text{and} \quad I_P = \frac{I_L}{\sqrt{3}} \qquad \text{(Equation 3)}$$

Substituting Equation (3) into Equation (1) we have, for any balanced three-phase load,

$$\text{Total three-phase power } = \sqrt{3}\, V_L L_L \cos\phi \text{ (W)}$$

So, a general equation for three-phase power is:

$$\text{Power } = \sqrt{3}\, V_L I_L \cos\phi$$

Example 1

A balanced star-connected three-phase load of 10 Ω per phase is supplied from a 400 V, 50 Hz mains supply at unity power factor. Calculate (a) the phase voltage, (b) the line current and (c) the total power consumed.

For a star connection

$$V_L = \sqrt{3}\, V_P \text{ and } I_L = I_P$$

For (a)

$$V_P = \frac{V_L}{\sqrt{3}} \text{(V)}$$

$$V_P = \frac{400\,\text{V}}{1.732} = 230.9\,\text{V}$$

For (b)

$$I_L = I_P = \frac{V_P}{R_P} \text{ (A)}$$

$$I_L = I_P = \frac{230.9\,\text{V}}{10\,\Omega} = 23.09\,\text{A}$$

For (c)

$$\text{Power } = \sqrt{3}\, V_L\, I_L \cos\phi \text{ (W)}$$

$$\therefore \text{ Power } = 1.732 \times 400\,\text{V} \times 23.09\,\text{A} \times 1 = 16\text{ kW}$$

Example 2

A 20 kW, 400 V balanced delta-connected load has a power factor of 0.8. Calculate (a) the line current and (b) the phase current.

We have that:

$$\text{Three-phase power} = \sqrt{3}\, V_L\, I_L \cos\phi \text{ (W)}$$

For (a)

$$I_L = \frac{\text{Power}}{\sqrt{3}\, V_L \cos\phi} \text{ (A)}$$

$$\therefore I_L = \frac{20{,}000\,\text{W}}{1.732 \times 400\,\text{V} \times 0.8}$$

$$I_L = 36.08 \text{ (A)}$$

For delta connection

$$I_L = \sqrt{3}\, I_P \text{ (A)}$$

Thus, for (b)

$$I_P = I_L/\sqrt{3} \text{ (A)}$$

$$\therefore I_P = \frac{36.08\,\text{A}}{1.732} = 20.83\,\text{A}$$

Example 3

Three identical loads each having a resistance of 30 Ω and inductive reactance of 40 Ω are connected first in star and then in delta to a 400 V three-phase supply. Calculate the phase currents and line currents for each connection.

For each load

$$Z = \sqrt{R^2 + X_L^2} \text{ (}\Omega\text{)}$$

$$\therefore Z = \sqrt{30^2 + 40^2}$$

$$Z = \sqrt{2500} = 50\,\Omega$$

For star connection

$$V_L = \sqrt{3}\, V_P \quad \text{and} \quad I_L = I_P$$

$$V_P = \frac{V_L}{\sqrt{3}} \text{(V)}$$

$$\therefore V_P = \frac{400\,\text{V}}{1.732} = 230.9\,\text{V}$$

$$I_P = \frac{V_P}{Z_P} \text{(A)}$$

$$\therefore I_P = \frac{230.9\,\text{V}}{50\,\Omega} = 4.62\,\text{A}$$

$$I_P = I_L$$

Therefore phase and line currents are both equal to 4.62 A.

(*Continued*)

Example 3 (Continued)

For delta connection

$$V_L = V_P \quad \text{and} \quad I_L = \sqrt{3}\, I_P$$

$$V_L = V_P = 400\,\text{V}$$

$$I_P = V_P / Z_P \text{ (A)}$$

$$\therefore I = \frac{400\,\text{V}}{50\,\Omega} = 8\,\text{A}$$

$$I_L = \sqrt{3}\, I_P \text{ (A)}$$

$$\therefore I_L = 1.732 \times 8\,\text{A} = 13.86\,\text{A}$$

Protecting electrical equipment, circuits and people

We know from the earlier chapters in this book that using electricity is one of the causes of accidents in the workplace. Using electricity is a hazard because it has the 'potential' and the possibility to cause harm. Therefore, the provision of protective devices in an electrical installation is fundamental to the whole concept of the safe use of electricity in buildings. The electrical installation as a whole must be protected against overload or short circuit and the people using the building must be protected against the risk of shock, fire or other risks arising from their own misuse of the installation or from a fault. The installation and maintenance of adequate and appropriate protective measures is a vital part of the safe use of electrical energy. I want to look at protection against an electric shock by both basic and fault protection, at protection by equipotential bonding and automatic disconnection of the supply, and protection against excess current.

Let us first define some of the words we will be using. Chapter 54 of the IEE Regulations describes the earthing arrangements for an electrical installation. It gives the following definitions:

Earth – the conductive mass of the earth whose electrical potential is taken as zero.

Earthing – the act of connecting the exposed conductive parts of an installation to the main protective earthing terminal of the installation.

Bonding conductor – a protective conductor providing equipotential bonding.

Bonding – the linking together of the exposed or extraneous metal parts of an electrical installation.

Circuit protective conductor (CPC) – a protective conductor connecting exposed conductive parts of equipment to the main earthing terminal. This is the green and yellow insulated conductor in twin and earth cable.

Exposed conductive parts – the metalwork of an electrical appliance or the trunking and conduit of an electrical system which can be touched because they are not normally live, but which may become live under fault conditions.

Definitions

Earth – the conductive mass of the earth whose electrical potential is taken as zero.

Earthing – the act of connecting the exposed conductive parts of an installation to the main protective earthing terminal of the installation.

Bonding conductor – a protective conductor providing equipotential bonding.

Bonding – the linking together of the exposed or extraneous metal parts of an electrical installation.

Circuit protective conductor (CPC) – a protective conductor connecting exposed conductive parts of equipment to the main earthing terminal.

Exposed conductive parts – the metalwork of an electrical appliance or the trunking and conduit of an electrical system which can be touched because they are not normally live, but which may become live under fault conditions.

Extraneous conductive parts – the structural steelwork of a building and other service pipes such as gas, water, radiators and sinks.

Shock protection – protection from electric shock is provided by basic protection and fault protection.

Extraneous conductive parts – the structural steelwork of a building and other service pipes such as gas, water, radiators and sinks. They do not form a part of the electrical installation but may introduce a potential, generally earth potential, to the electrical installation.

Shock protection – protection from electric shock is provided by basic protection and fault protection.

Basic protection – is provided by the insulation of live parts in accordance with Section 416 of the IEE Regulations.

Fault protection – is provided by protective equipotential bonding and automatic disconnection of the supply (by a fuse or miniature circuit breaker, MCB) in accordance with IEE Regulations 411.3 to 6.

Protective equipotential bonding – this is equipotential bonding for the purpose of safety as shown in Fig. 4.2 of this book.

Definitions

Basic protection – is provided by the insulation of live parts in accordance with Section 416 of the IEE Regulations.

Fault protection – is provided by protective equipotential bonding and automatic disconnection of the supply (by a fuse or miniature circuit breaker, MCB) in accordance with IEE Regulations 411.3 to 6.

Protective equipotential bonding – this is equipotential bonding for the purpose of safety as shown in Fig. 4.2 of this book.

Try this

Definitions

To help you to remember these definitions, try writing them out in your own words. Identify the essential words.

Basic protection and fault protection

The human body's movements are controlled by the nervous system. Very tiny electrical signals travel between the central nervous system and the muscles, stimulating operation of the muscles, which enable us to walk, talk and run, and remember that the heart is also a muscle.

If the body becomes part of a more powerful external circuit, such as the electrical mains, and current flows through it, the body's normal electrical operations are disrupted. The shock current causes unnatural operation of the muscles and the result may be that the person is unable to release the live conductor causing the shock, or the person may be thrown across the room. The current which flows through the body is determined by the resistance of the human body and the surface resistance of the skin on the hands and feet.

This leads to the consideration of exceptional precautions where people with wet skin or wet surfaces are involved, and the need for special consideration in bathroom installations.

Two types of contact will result in a person receiving an electric shock. *Direct contact* with live parts which involves touching a terminal or line conductor that is actually live. The regulations call this *basic protection*. Indirect contact results from contact with an exposed conductive part such as the metal structure of a piece of equipment that has *become live as a result of a fault*. The regulations call this *fault protection*.

In installations operating at normal mains voltage, the primary method of *protection against direct contact* is by insulation. All live parts are enclosed in insulating material such as rubber or plastic, which prevents contact with those

parts. The insulating material must, of course, be suitable for the circumstances in which they will be used and the stresses to which they will be subjected. The IEE Regulations call this *basic protection* (IEE Regulation 131.2.1).

Other methods of *basic protection* include the provision of barriers or enclosures which can only be opened by the use of a tool, or when the supply is first disconnected. Protection can also be provided by fixed obstacles such as a guardrail around an open switchboard or by placing live parts out of reach as with overhead lines.

Fault protection

Protection against indirect contact, called fault protection (IEE Regulation 131.2.2), is achieved by connecting exposed conductive parts of equipment to the main protective earthing terminal.

In Chapter 13 of the IEE Regulations we are told that where the metalwork of electrical equipment may become charged with electricity in such a manner as to cause danger, that metalwork will be connected with earth so as to discharge the electrical energy without danger. The application of protective equipotential bonding is one of the important principles for safety.

There are five methods of protection against contact with metalwork which has become unintentionally live, that is, indirect contact with exposed conductive parts recognized by the IEE Regulations. These are:

1. protective equipotential bonding coupled with automatic disconnection of the supply,
2. the use of Class II (double insulated) equipment,
3. the provision of a non-conducting location,
4. the use of earth free equipotential bonding,
5. electrical separation.

Methods 3 and 4 are limited to special situations under the effective supervision of trained personnel.

Method 5, electrical separation, is little used but does find an application in the domestic electric shaver supply unit which incorporates an isolating transformer.

Method 2, the use of Class II insulated equipment, is limited to single pieces of equipment such as tools used on construction sites, because it relies upon effective supervision to ensure that no metallic equipment or extraneous earthed metalwork enters the area of the installation.

The method which is most universally used in the United Kingdom is, therefore, Method 1 – protective equipotential bonding coupled with automatic disconnection of the supply.

This method relies upon all exposed metalwork being electrically connected together to an effective earth connection. Not only must all the metalwork associated with the electrical installation be so connected, that is conduits, trunking, metal switches and the metalwork of electrical appliances, but Regulation 411.3.1.2 tells us to connect the extraneous metalwork of water service pipes, gas and other service pipes and ducting, central heating and air conditioning systems, exposed metallic structural parts of the building and lightning protective systems to the protective earthing terminal. In this way the possibility of a voltage appearing between two exposed metal parts is removed. Protective equipotential bonding is shown in Fig. 4.2 in this chapter.

The second element of this protection method is the provision of a means of automatic disconnection of the supply in the event of a fault occurring that causes the exposed metalwork to become live.

IEE Regulation 411.3.2 tells us that for final circuits not exceeding 32 A the maximum disconnection time shall not exceed 0.4 s.

The achievement of these disconnection times is dependent upon the type of protective device used, fuse or circuit breaker, the circuit conductors to the fault and the provision of adequate protective equipotential bonding. The resistance, or we call it the impedance, of the earth fault loop must be less than the values given in Appendix 2 of the *On Site Guide* and Tables 41.2 to 41.4 of the IEE Regulations. (Table 4.2 later in this chapter shows the maximum value of the earth fault loop impedance for circuits protected by MCBs to BS EN 60898.) We will look at this again later in this chapter under the heading 'Earth fault loop impedance Z_S'. Chapter 54 of the IEE Regulations gives details of the earthing arrangements to be incorporated in the supply system to meet these regulations and these are described later in this chapter under the heading 'Electricity supply systems'.

Residual current protection

The IEE Regulations recognize the particular problems created when electrical equipment such as lawnmowers, hedge-trimmers, drills and lights are used outside buildings. In these circumstances the availability of an adequate earth return path is a matter of chance. The regulations, therefore, require that any socket outlet with a rated current not exceeding 20 A, for use by ordinary people and intended for general use, shall have the additional protection of a residual current device (RCD) which has a rated operating current of not more than 30 milliamperes (mA) (IEE Regulation 411.3.3).

Try this

Definitions

- What do the regulations mean by 'ordinary people'?
- Look at the definitions in Chapter 3 and write it in the margin here.

An RCD is a type of circuit breaker that continuously compares the current in the line and neutral conductors of the circuit. The currents in a healthy circuit will be equal, but in a circuit that develops a fault, some current will flow to earth and the line and neutral currents will no longer balance. The RCD detects the imbalance and disconnects the circuit. Figure 4.17 later in this chapter shows an RCD's construction.

Isolation and switching

Part 4 of the IEE Regulations deals with the application of protective measures for safety and Chapter 53 with the regulations for switching devices or switchgear required for protection, isolation and switching of a consumer's installation.

The consumer's main switchgear must be readily accessible to the consumer and be able to:

- isolate the complete installation from the supply,
- protect against overcurrent,
- cut off the current in the event of a serious fault occurring.

The regulations identify four separate types of switching: switching for isolation, switching for mechanical maintenance, emergency switching and functional switching.

Definition

Isolation is defined as cutting off the electrical supply to a circuit or item of equipment in order to ensure the safety of those working on the equipment by making dead those parts which are live in normal service.

Isolation is defined as cutting off the electrical supply to a circuit or item of equipment in order to ensure the safety of those working on the equipment by making dead those parts which are live in normal service.

The purpose of isolation switching is to enable electrical work to be carried out safely on an isolated circuit or piece of equipment. Isolation is intended for use by electrically skilled or supervised persons.

An isolator is a mechanical device which is operated manually and used to open or close a circuit off load. An isolator switch must be provided close to the supply point so that all equipment can be made safe for maintenance. Isolators for motor circuits must isolate the motor and the control equipment, and isolators for discharge lighting luminaires must be an integral part of the luminaire so that it is isolated when the cover is removed or be provided with effective local isolation (IEE Regulation 537.2.1.6). Devices which are suitable for isolation are isolation switches, fuse links, circuit breakers, plugs and socket outlets. They must isolate all live supply conductors and provision must be made to secure the isolation (IEE Regulation 537.2.2.4).

WWW

Isolation at the consumer's service position can be achieved by a double pole switch which opens or closes all conductors simultaneously. On three-phase supplies the switch need only break the live conductors with a solid link in the neutral, provided that the neutral link cannot be removed before opening the switch.

Definition

The switching for mechanical maintenance requirements is similar to those for isolation except that the control switch must be capable of switching the full load current of the circuit or piece of equipment.

The switching for mechanical maintenance requirements is similar to those for isolation except that the control switch must be capable of switching the full load current of the circuit or piece of equipment.

The purpose of switching for mechanical maintenance is to enable non-electrical work to be carried out safely on the switched circuit or equipment.

Mechanical maintenance switching is intended for use by skilled but non-electrical persons. Switches for mechanical maintenance must be manually operated, not have exposed live parts when the appliance is opened, must be connected in the main electrical circuit and have a reliable on/off indication or visible contact gap (IEE Regulation 537.3.2.2). Devices which are suitable for switching off for mechanical maintenance are switches, circuit breakers, plug and socket outlets.

Definition

Emergency switching involves the rapid disconnection of the electrical supply by a single action to remove or prevent danger.

Emergency switching involves the rapid disconnection of the electrical supply by a single action to remove or prevent danger.

The purpose of emergency switching is to cut off the electrical energy *rapidly* to remove an unexpected hazard.

Emergency switching is for use by anyone. The device used for emergency switching must be immediately accessible and identifiable, and be capable of cutting off the full load current.

Electrical machines must be provided with a means of emergency switching, and a person operating an electrically driven machine must have access to an emergency switch so that the machine can be stopped in an emergency. The remote stop/start arrangement could meet this requirement for an electrically driven machine (IEE Regulation 537.4.2.2). Devices which are suitable for emergency switching are switches, circuit breakers and contactors. Where contactors are operated by remote control they should *open* when the coil is de-energized, that is, fail safe. Push-buttons used for emergency switching must be coloured red and latch in the stop or off position. They should be installed where danger may arise and be clearly identified as emergency switches. Plugs and socket outlets cannot be considered appropriate for emergency disconnection of supplies.

Functional switching involves the switching on or off, or varying the supply, of electrically operated equipment in normal service.

The purpose of functional switching is to provide control of electrical circuits and equipment in normal service.

Functional switching is for the user of the electrical installation or equipment. The device must be capable of interrupting the total steady current of the circuit or appliance. When the device controls a discharge lighting circuit it must have a current rating capable of switching an inductive load. The regulations acknowledge the growth in the number of electronic dimmer switches being used for the control and functional switching of lighting circuits. The functional switch must be capable of performing the most demanding duty it may be called upon to perform (IEE Regulations 537.5.2.1 and 2).

Definition

Functional switching involves the switching on or off, or varying the supply, of electrically operated equipment in normal service.

Overcurrent protection

The consumer's mains equipment must provide protection against overcurrent, that is a current exceeding the rated value (IEE Regulation 430.3). Fuses provide overcurrent protection when situated in the live conductors; they must not be connected in the neutral conductor. Circuit breakers may be used in place of fuses, in which case the circuit breaker may also provide the means of isolation, although a further means of isolation is usually provided so that maintenance can be carried out on the circuit breakers themselves.

Safety first

Isolation

Isolation and switching for protection is an important safety measure in the electrotechnical industry.

When selecting a protective device we must give consideration to the following factors:

- the prospective fault current,
- the circuit load characteristics,
- the current carrying capacity of the cable,
- the disconnection time requirements for the circuit.

The essential requirements for a device designed to protect against overcurrent are:

- it must operate automatically under fault conditions,
- have a current rating matched to the circuit design current,
- have a disconnection time which is within the design parameters,
- have an adequate fault breaking capacity,
- be suitably located and identified.

We will look at these requirements below.

An overcurrent may be an overload current, or a short-circuit current. An **overload current** can be defined as a current which exceeds the rated value in

Definitions

An *overload current* can be defined as a current which exceeds the rated value in an otherwise healthy circuit.

A *short circuit* is an overcurrent resulting from a fault of negligible impedance connected between conductors.

an otherwise healthy circuit. Overload currents usually occur because the circuit is abused or because it has been badly designed or modified. A **short circuit** is an overcurrent resulting from a fault of negligible impedance connected between conductors. Short circuits usually occur as a result of an accident which could not have been predicted before the event.

An overload may result in currents of two or three times the rated current flowing in the circuit. Short-circuit currents may be hundreds of times greater than the rated current. In both cases the basic requirements for protection are that the fault currents should be interrupted quickly and the circuit isolated safely before the fault current causes a temperature rise or mechanical effects which might damage the insulation, connections, joints and terminations of the circuit conductors or their surroundings (IEE Regulation 130.3).

The selected protective device should have a current rating which is not less than the full load current of the circuit but which does not exceed the cable current rating. The cable is then fully protected against both overload and short-circuit faults (IEE Regulation 435.1). Devices which provide overcurrent protection are:

- High breaking capacity (HBC) fuses to BS 88-6. These are for industrial applications having a maximum fault capacity of 80 kA.
- Cartridge fuses to BS 1361. These are used for a.c. circuits on industrial and domestic installations having a fault capacity of about 30 kA.
- Cartridge fuses to BS 1362. These are used in 13 A plug tops and have a maximum fault capacity of about 6 kA.
- Semi-enclosed fuses to BS 3036. These were previously called re-wirable fuses and are used mainly on domestic installations having a maximum fault capacity of about 4 kA.
- MCBs to BS EN 60898. These are miniature circuit breakers (MCBs) which may be used as an alternative to fuses for some installations. The British Standard includes ratings up to 100 A and maximum fault capacities of 9 kA. They are graded according to their instantaneous tripping currents – that is, the current at which they will trip within 100 ms. This is less than the time taken to blink an eye.

Definition

By definition a *fuse* is the weakest link in the circuit. Under fault conditions it will melt when an overcurrent flows, protecting the circuit conductors from damage.

By definition a fuse is the weakest link in the circuit. Under fault conditions it will melt when an overcurrent flows, protecting the circuit conductors from damage.

Semi-enclosed fuses (BS 3036)

The semi-enclosed fuse consists of a fuse wire, called the fuse element, secured between two screw terminals in a fuse carrier. The fuse element is connected in series with the load and the thickness of the element is sufficient to carry the normal rated circuit current. When a fault occurs an overcurrent flows and the fuse element becomes hot and melts or 'blows'.

This type of fuse is illustrated in Fig. 4.10. The fuse element should consist of a single strand of plain or tinned copper wire having a diameter appropriate to the current rating of the fuse. *This type of fuse was very popular in domestic installations, but less so these days because of its disadvantages.*

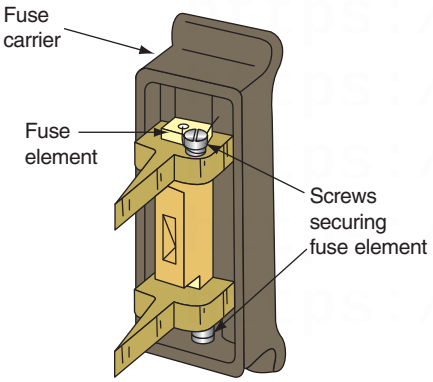

Figure 4.10 A semi-enclosed fuse.

Advantage of semi-enclosed fuses

- They are very cheap compared with other protective devices both to install and to replace.
- There are no mechanical moving parts.
- It is easy to identify a 'blown' fuse.

Disadvantages of semi-enclosed fuses

- The fuse element may be replaced with wire of the wrong size either deliberately or by accident.
- The fuse element weakens with age due to oxidization, which may result in a failure under normal operating conditions.
- The circuit cannot be restored quickly since the fuse element requires screw fixing.
- They have low breaking capacity since, in the event of a severe fault, the fault current may vaporize the fuse element and continue to flow in the form of an arc across the fuse terminals.
- They are not guaranteed to operate until up to twice the rated current is flowing.
- There is a danger from scattering hot metal if the fuse carrier is inserted into the base when the circuit is faulty.

Cartridge fuses (BS 1361)

The cartridge fuse breaks a faulty circuit in the same way as a semi-enclosed fuse, but its construction eliminates some of the disadvantages experienced with an open-fuse element. The fuse element is encased in a glass or ceramic tube and secured to end-caps which are firmly attached to the body of the fuse so that they do not blow off when the fuse operates. Cartridge fuse construction is illustrated in Fig. 4.11. With larger size cartridge fuses, lugs or tags are sometimes brazed on the end-caps to fix the fuse cartridge mechanically to the carrier. They may also be filled with quartz sand to absorb and extinguish the energy of the arc when the cartridge is brought into operation.

Advantages of cartridge fuses

- They have no mechanical moving parts.
- The declared rating is accurate.
- The element does not weaken with age.
- They have small physical size and no external arcing which permits their use in plug tops and small fuse carriers.
- Their operation is more rapid than semi-enclosed fuses. Operating time is inversely proportional to the fault current, so the bigger the fault current the quicker the fuse operates.
- They are easy to replace.

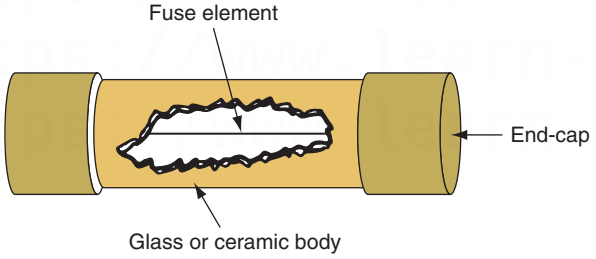

Figure 4.11 Cartridge fuse.

Figure 4.12 MCBs – B Breaker, fits Wylex standard consumer unit (courtesy of Wylex).

Disadvantages of cartridge fuses

- They are more expensive to replace than fuse elements that can be re-wired.
- They can be replaced with an incorrect cartridge.
- The cartridge may be shorted out by wire or silver foil in extreme cases of bad practice.
- It is not possible to see if the fuse element is broken.

Miniature circuit breakers (BS EN 60898)

The disadvantage of all fuses is that when they have operated they must be replaced. An MCB overcomes this problem since it is an automatic switch which opens in the event of an excessive current flowing in the circuit and can be closed when the circuit returns to normal.

An MCB of the type shown in Fig. 4.12 incorporates a thermal and magnetic tripping device. The load current flows through the thermal and the electromagnetic devices in normal operation but under overcurrent conditions they activate and trip the MCB.

The circuit can be restored when the fault is removed by pressing the ON toggle. This latches the various mechanisms within the MCB and 'makes' the switch contact. The toggle switch can also be used to disconnect the circuit for maintenance or isolation or to test the MCB for satisfactory operation.

Advantages of MCBs

- They have factory set operating characteristics.
- Tripping characteristics and therefore circuit protection is set by the installer.
- The circuit protection is difficult to interfere with.
- The circuit is provided with discrimination.
- A faulty circuit may be quickly identified.
- A faulty circuit may be easily and quickly restored.
- The supply may be safely restored by an unskilled operator.

Disadvantages of MCBs

- They are relatively expensive but look at the advantages to see why they are so popular these days.
- They contain mechanical moving parts and therefore require regular testing to ensure satisfactory operation under fault conditions.

Characteristics of MCBs

MCB Type B to BS EN 60898 will trip instantly at between three and five times its rated current and is also suitable for domestic and commercial installations.

MCB Type C to BS EN 60898 will trip instantly at between five and ten times its rated current. It is more suitable for highly inductive commercial and industrial loads.

MCB Type D to BS EN 60898 will trip instantly at between 10 and 25 times its rated current. It is suitable for welding and X-ray machines where large inrush currents may occur.

RCBO

A residual current operated circuit breaker with integral overcurrent protection (RCBO) provides protection against overload and/or short circuit. RCBOs give the combined protection of an MCB and an RCD in one device.

Installing overcurrent protective devices

The general principle to be followed is that a protective device must be placed at a point where a reduction occurs in the current carrying capacity of the circuit conductors (IEE Regulations 433.2 and 434.2). A reduction may occur because of a change in the size or type of conductor or because of a change in the method of installation or a change in the environmental conditions. The only exceptions to this rule are where an overload protective device opening a circuit might cause a greater danger than the overload itself – for example, a circuit feeding an overhead electromagnet in a scrapyard.

Fault protection

The overcurrent protection device protecting circuits not exceeding 32 A shall have a disconnection time not exceeding 0.4 s (IEE Regulation 411.3.2.2).

The IEE Regulations permit us to assume that where an overload protective device is also intended to provide short-circuit protection, and has a rated breaking capacity greater than the prospective short-circuit current at the point of its installation, the conductors on the load side of the protective device are considered to be adequately protected against short-circuit currents without further proof. This is because the cable rating and the overload rating of the device are compatible. However, if this condition is not met or if there is some doubt, it must be verified that fault currents will be interrupted quickly before they can cause a dangerously high temperature rise in the circuit conductors. IEE Regulation 434.5.2 provides an equation for calculating the maximum operating time of the protective device to prevent the permitted conductor temperature rise being exceeded as follows:

$$t = \frac{k^2S^2}{I^2} \text{ (s)}$$

where

t = duration time in seconds

S = cross-sectional area of conductor in square millimetres

I = short-circuit r.m.s. current in amperes

k = a constant dependent upon the conductor metal and type of insulation (see Table 43 A of the IEE Regulations).

Example

A 10 mm PVC sheathed mineral insulated (MI) copper cable is short circuited when connected to a 400 V supply. The impedance of the short-circuit path is 0.1 Ω. Calculate the maximum permissible disconnection time and show that a 50 A Type B MCB to BS EN 60898 will meet this requirement.

$$I = \frac{V}{Z}\ \text{(A)} \qquad I = \frac{400\,\text{V}}{0.1\Omega} = 4000\,\text{A}$$

$$\therefore\ \text{Fault current} = 4000\,\text{A}$$

For PVC sheathed MI copper cables, Table 43.1 gives a value for k of 115. So,

$$t = \frac{k^2 S^2}{I^2}\ \text{(s)}$$

$$\therefore\ t = \frac{115^2 \times 10^2\,\text{mm}^2}{4000\,\text{A}} = 82.66 \times 10^{-3}\,\text{s}$$

The maximum time that a 4000 A fault current can be applied to this 10 mm^2 cable without dangerously raising the conductor temperature is 82.66 ms. Therefore, the protective device must disconnect the supply to the cable in less than 82.66 ms under short-circuit conditions. Manufacturers' information and Appendix 3 of the IEE Regulations give the operating times of protective devices at various short-circuit currents in the form of graphs. Let us come back to this problem in a few moments.

Time/current characteristics of protective devices

Disconnection times for various overcurrent devices are given in the form of a logarithmic graph. This means that each successive graduation of the axis represents a 10 times change over the previous graduation.

These logarithmic scales are shown in the graphs of Figs 4.13 and 4.14. From Fig. 4.13 it can be seen that the particular protective device represented by this characteristic will take 8 s to disconnect a fault current of 50 A and 0.08 s to clear a fault current of 1000 A.

Let us now go back to the problem and see if the Type B MCB will disconnect the supply in less than 82.66 ms.

Figure 4.14(a) shows the time/current characteristics for a Type B MCB to BS EN 60898. This graph shows that a fault current of 4000 A will trip the protective device in 20 ms. Since this is quicker than 82.66 ms, the 50 A Type B MCB is suitable and will clear the fault current before the temperature of the cable is raised to a dangerous level.

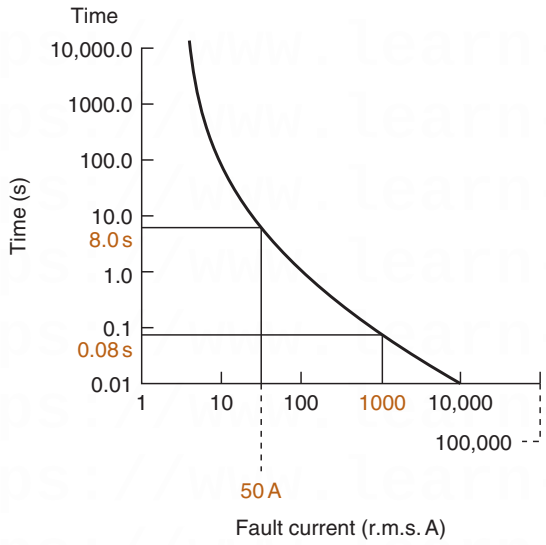

Figure 4.13 Time/current characteristic of an overcurrent protective device.

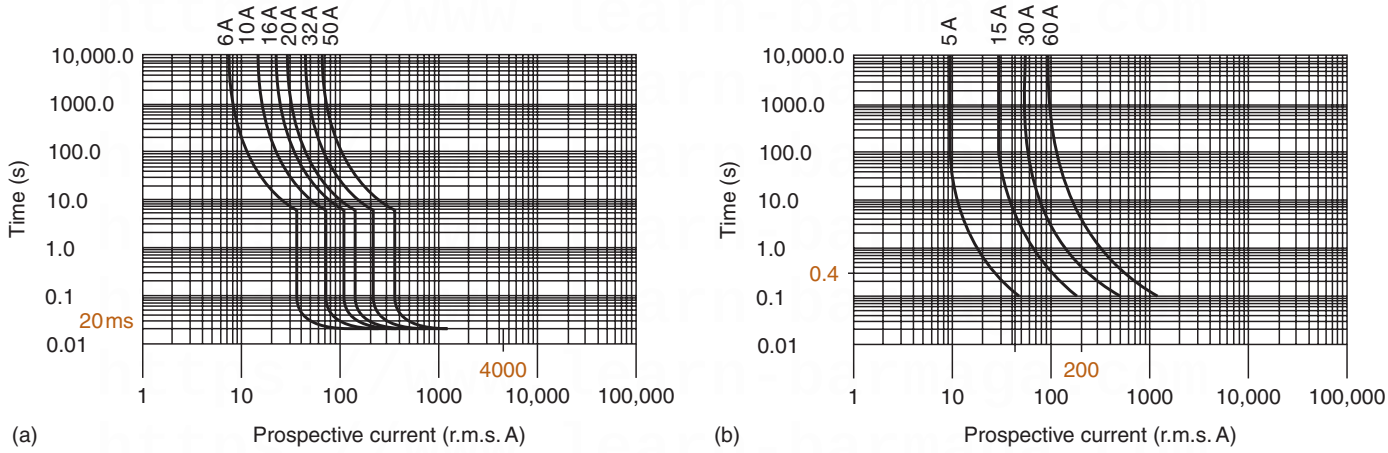

Figure 4.14 Time/current characteristics of (a) a Type B MCB to BS EN 60898 and (b) semi-enclosed fuse to BS 3036.

Appendix 3 of the IEE Regulations gives the time/current characteristics and specific values of prospective short-circuit current for a number of protective devices.

These indicate the value of fault current which will cause the protective device to operate in the times indicated by IEE Regulation 411.

Figures 3.1, 3.2 and 3.3 in Appendix 3 of the IEE Regulations deal with fuses and Figs 3.4, 3.5 and 3.6 with MCBs.

It can be seen that the prospective fault current required to trip an MCB in the required time is a multiple of the current rating of the device. The multiple depends upon the characteristics of the particular devices. Thus:

- Type B MCB to BS EN 60898 has a multiple of 5
- Type C MCB to BS EN 60898 has a multiple of 10
- Type D MCB to BS EN 60898 has a multiple of 20.

Example

A 6 A Type B MCB to BS EN 60898 which is used to protect a domestic lighting circuit will trip within 0.4 s when 6 A times a multiple of 5, that is 30 A, flows under fault conditions.

Therefore if the earth fault loop impedance is low enough to allow at least 30 A to flow in the circuit under fault conditions, the protective device will operate within the time required by IEE Regulation 411.

The characteristics shown in Appendix 3 of the IEE Regulations give the specific values of prospective short-circuit current for all standard sizes of protective device.

Effective discrimination of protective devices

In the event of a fault occurring on an electrical installation only the protective device nearest to the fault should operate, leaving other healthy circuits unaffected. A circuit designed in this way would be considered to have effective discrimination. Effective discrimination can be achieved by graded protection since the speed of operation of the protective device increases as the rating decreases. This can be seen in Fig. 4.14(b). A fault current of 200 A will cause a 15 A semi-enclosed fuse to operate in about 0.1 s, a 30 A semi-enclosed fuse in about 0.4 s and a 60 A semi-enclosed fuse in about 5.0 s. If a circuit is arranged as shown in Fig. 4.15 and a fault occurs on the appliance, effective discrimination will be achieved because the 15 A fuse will operate more quickly than the other protective devices if they were all semi-enclosed type fuses with the characteristics shown in Fig. 4.14(b).

Security of supply, and therefore effective discrimination, is an important consideration for an electrical designer and is also a requirement of the IEE Regulations.

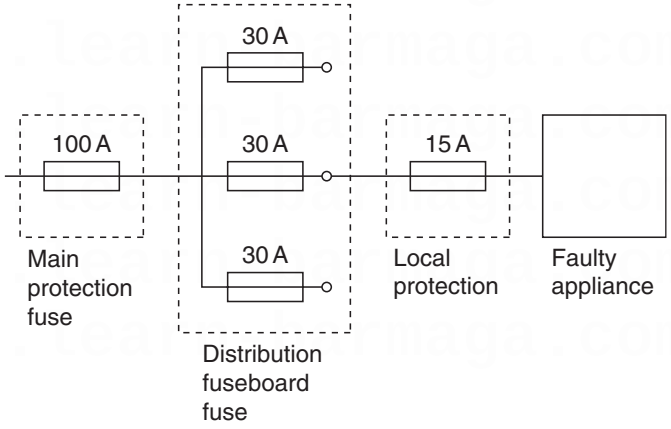

Figure 4.15 Effective discrimination achieved by graded protection.

Earth fault loop impedance Z_S

In order that an overcurrent protective device can operate successfully it must meet the required disconnection times of IEE Regulation 411.3.2.2, that is, final circuits not exceeding 32 A shall have a disconnection time not exceeding 0.4 s. To achieve this, the earth fault loop impedance value measured in ohms must be less than those values given in Appendix 2 of the *On Site Guide* and Tables 41.2 and 41.3 of the IEE Regulations. The value of the earth fault loop impedance may be verified by means of an earth fault loop impedance test as described in Chapter 7 of this book. The formula is:

$$Z_S = Z_E + (R_1 + R_2)\ (\Omega)$$

Here Z_E is the impedance of the supply side of the earth fault loop. The actual value will depend upon many factors: the type of supply, the ground conditions, the distance from the transformer, etc. The value can be obtained from the area electricity companies, but typical values are 0.35 Ω for TN-C-S (protective multiple earthing, PME) supplies and 0.8 Ω for TN-S (cable sheath earth) supplies. Also in the above formula, R_1 is the resistance of the line conductor and R_2 is the resistance of the earth conductor. The complete earth fault loop path is shown in Fig. 4.16.

Values of $R_1 + R_2$ have been calculated for copper and aluminium conductors and are given in Table 9A of the *On Site Guide* as shown in Table 4.1 of this book.

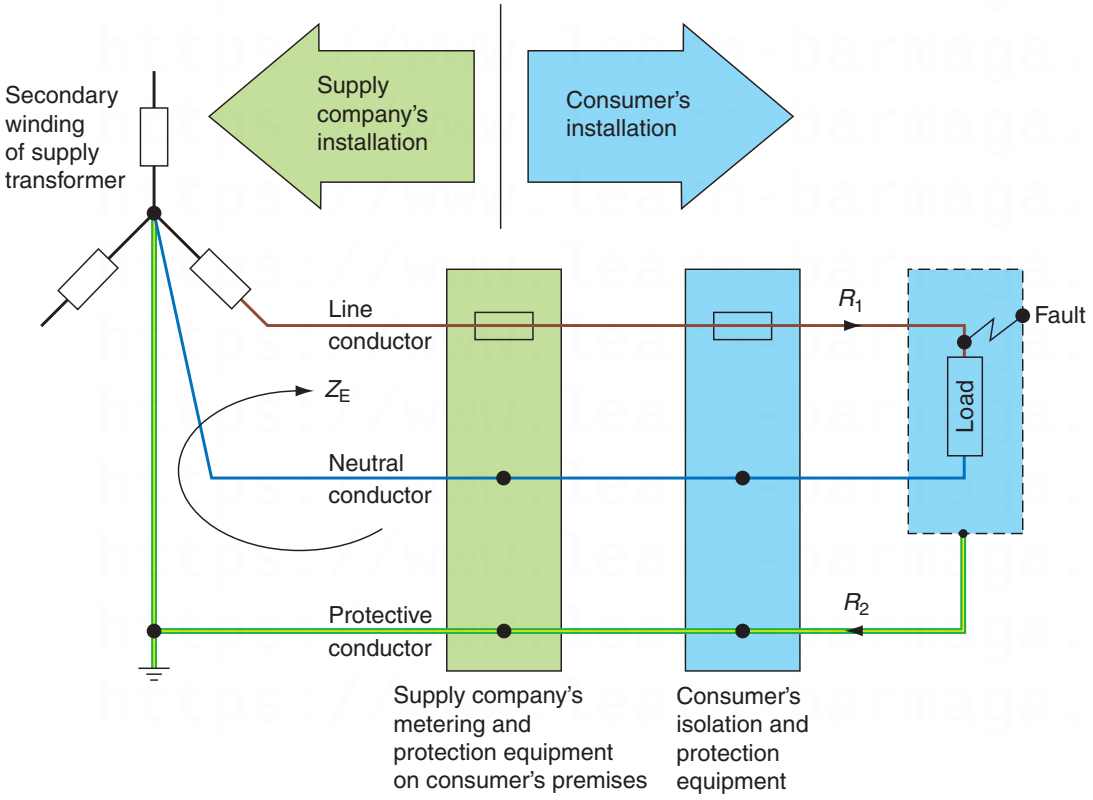

Figure 4.16 Earth fault loop path for a TN-S system.

Example

A 20 A radial socket outlet circuit is wired in 2.5 mm^2 PVC cable incorporating a 1.5 mm^2 CPC. The cable length is 30 m installed in an ambient temperature of 20°C and the consumer's protection is by 20 A MCB Type B to BS EN 60898. The earth fault loop impedance of the supply is 0.5 Ω. Calculate the total earth fault loop impedance Z_S, and establish that the value is less than the maximum value permissible for this type of circuit.

We have:

$$Z_S = Z_E + (R_1 + R_2)\ (\Omega)$$

$$Z_E = 0.5\,\Omega \text{ (value given in the question)}$$

From the value given in Table 9A of the *On Site Guide* and reproduced in Table 4.1 a 2.5 mm phase conductor with a 1.5 mm protective conductor has an $(R_1 + R_2)$ value of $19.51 \times 10^{-3}\,\Omega$/m.

$$\text{For 30 m cable } (R_1 + R_2) = 19.51 \times 10^{-3}\,\Omega/\text{m} \times 30\,\text{m} = 0.585\,\Omega$$

However, under fault conditions, the temperature and therefore the cable resistance will increase. To take account of this, we must multiply the value of cable resistance by the factor given in Table 9C of the *On Site Guide*. In this case the factor is 1.20 and therefore the cable resistance under fault conditions will be:

$$0.585\,\Omega \times 1.20 = 0.702\,\Omega$$

The total earth fault loop impedance is therefore:

$$Z_S = 0.5\,\Omega + 0.702\,\Omega = 1.202\,\Omega$$

Table 4.1 Table 9A of the IEE *On Site Guide*: value of resistance/metre for copper and aluminium conductors and of $R_1 + R_2$ per metre at 20°C in milliohms/metre

Cross-sectional area (mm^2)		Resistance/metre or $(R_1 + R_2)$/metre (mΩ/m)	
Phase conductor	**Protective conductor**	**Copper**	**Aluminium**
1	–	18.10	
1	1	36.20	
1.5	–	12.10	
1.5	1	30.20	
1.5	1.5	24.20	
2.5	–	7.41	
2.5	1	25.51	
2.5	1.5	19.51	
2.5	2.5	14.82	
4	–	4.61	
4	1.5	16.71	

(*Continued*)

Table 4.1 (Continued)

Cross-sectional area (mm²)		Resistance/metre or ($R_1 + R_2$)/metre (mΩ/m)	
Phase conductor	**Protective conductor**	**Copper**	**Aluminium**
4	2.5	12.02	
4	4	9.22	
6	–	3.08	
6	2.5	10.49	
6	4	7.69	
6	6	6.16	
10	–	1.83	
10	4	6.44	
10	6	4.91	
10	10	3.66	
16	–	1.15	1.91
16	6	4.23	–
16	10	2.98	–
16	16	2.30	3.82
25	–	0.727	1.20
25	10	2.557	–
25	16	1.877	–
25	25	1.454	2.40
35	–	0.524	0.87
35	16	1.674	2.78
35	25	1.251	2.07
35	35	1.048	1.74
50	–	0.387	0.64
50	25	1.114	1.84
50	35	0.911	1.51
50	50	0.774	1.28

Reproduced from the IEE *On Site Guide* by kind permission of the Institution of Electrical Engineers.

The maximum permitted value given in Table 41.3 of the IEE Regulations for a 20 A MCB protecting a socket outlet is 2.3 Ω as shown by Table 4.2. The circuit earth fault loop impedance is less than this value and therefore the protective device will operate within the required disconnection time of 0.4 s.

Table 4.2 Maximum earth fault loop impedance Z_s MCB Type B maximum measured earth fault loop impedance (Ω) when overcurrent protective device is MCB Type B to BS EN 60898

	MCB rating (A)							
	6	10	16	20	25	32	40	50
For 0.4 s disconnection Z_S (Ω)	7.67	4.6	2.87	2.3	1.84	1.44	1.15	0.92

Reproduced from the IEE *On Site Guide* by kind permission of the Institution of Electrical Engineers.

Protective conductor size

The CPC forms an integral part of the total earth fault loop impedance, so it is necessary to check that the cross-section of this conductor is adequate. If the cross-section of the CPC complies with Table 54.7 of the IEE Regulations, there is no need to carry out further checks. Where line and protective conductors are made from the same material, Table 54.7 tells us that:

- for line conductors equal to or less than 16 mm^2, the protective conductor should equal the line conductor;
- for line conductors greater than 16 mm^2 but less than 35 mm^2, the protective conductor should have a cross-sectional area of 16 mm^2;
- for line conductors greater than 35 mm^2, the protective conductor should be half the size of the line conductor.

However, where the conductor cross-section does not comply with this table, then the formula given in IEE Regulation 543.1.3 must be used:

$$S = \frac{\sqrt{I^2 t}}{k} \text{ (mm}^2\text{)}$$

where

S = cross-sectional area in mm^2

I = value of maximum fault current in amperes

t = operating time of the protective device

k = a factor for the particular protective conductor (see Tables 54.2 to 54.4 of the IEE Regulations).

Example 1

A 230 V ring main circuit of socket outlets is wired in 2.5 mm single PVC copper cables in a plastic conduit with a separate 1.5 mm CPC. An earth fault loop impedance test identifies Z_s as 1.15 Ω. Verify that the 1.5 mm CPC meets the requirements of IEE Regulation 543.1.3 when the protective device is a 30 A semi-enclosed fuse.

$$I = \text{Maximum fault current} = \frac{V}{Z_s} \text{(A)}$$

$$\therefore \frac{230}{1.15} = 200\,\text{A}$$

(*Continued*)

Example 1 (Continued)

t = maximum operating time of the protective device for a circuit not exceeding 32 A is 0.4 s from IEE Regulation 411.3.2.2. From Fig. 4.14(b) you can see that the time taken to clear a fault of 200 A is about 0.4 s

k = 115 (from Table 54.3)

$$S = \frac{\sqrt{I^2 t}}{k} (\text{mm}^2)$$

$$S = \frac{\sqrt{(200\,\text{A})^2 \times 0.4\,\text{s}}}{115} = 1.10\,\text{mm}^2$$

A 1.5 mm^2 CPC is acceptable since this is the nearest standard-size conductor above the minimum cross-sectional area of 1.10 mm^2 found by calculation.

Example 2

A TN supply feeds a domestic immersion heater wired in 2.5 mm^2 PVC insulated copper cable and incorporates a 1.5 mm^2 CPC. The circuit is correctly protected with a 15 A semi-enclosed fuse to BS 3036. Establish by calculation that the CPC is of an adequate size to meet the requirements of IEE Regulation 543.1.3. The characteristics of the protective device are given in IEE Regulation Table 3.2A.

For final circuits less than 32 A the maximum operating time of the protective device is 0.4 s. From Table 3.2A it can be seen that a current of about 90 A will trip the 15 A fuse in 0.4 s. The small insert table on the top right of Table 3.2 A of the IEE Regulations gives the value of the prospective fault current required to operate the device within the various disconnection times given.

So, in this case the table states that 90 A will trip a 15 A semi-enclosed fuse in 0.4 s

$$\therefore I = 90\,\text{A}$$

$$t = 0.4\,\text{s}$$

$$k = 115 \text{ (from Table 54.3)}$$

$$S = \frac{\sqrt{I^2 t}}{k} (\text{mm}^2) \text{ (from IEE Regulation 543.1.3)}$$

$$S = \frac{\sqrt{(90\,\text{A})^2 \times 0.4\,\text{s}}}{115} = 0.49\,\text{mm}^2$$

The CPC of the cable is greater than 0.49 mm^2 and is therefore suitable.
If the protective conductor is a separate conductor, that is, it does not form part of a cable as in this example and is not enclosed in a wiring system as in Example 1, the cross-section of the protective conductor must be not less than 2.5 mm^2 where mechanical protection is provided or 4.0 mm^2 where mechanical protection is ***not*** provided in order to comply with IEE Regulation 544.2.3.

WWW

Additional protection: RCDs

When it is required to provide the very best protection from electric shock and fire risk, earth fault protection devices are incorporated in the installation. The object of the regulations concerning these devices (411.3.2.1 to 411.3.2.6) is to remove an earth fault current very quickly, less than 0.4 s for all final circuits not exceeding 32 A, and limit the voltage which might appear on any exposed metal parts under fault conditions to not more than 50 V. They will continue to provide adequate protection throughout the life of the installation even if the earthing conditions deteriorate. This is in direct contrast to the protection provided by overcurrent devices, which require a low resistance earth loop impedance path.

The regulations recognize RCDs as 'additional protection' in the event of failure of the provision for basic protection, fault protection or carelessness by the users of the installation (IEE Regulation 415.1.1).

The basic circuit for a single-phase RCD is shown in Fig. 4.17. The load current is fed through two equal and opposing coils wound on to a common transformer core. The phase and neutral currents in a healthy circuit produce equal and opposing fluxes in the transformer core, which induces no voltage in the tripping coil. However, if more current flows in the line conductor than in the neutral conductor as a result of a fault between live and earth, an out-of-balance flux will result in an e.m.f. being induced in the trip coil which will open the double pole switch and isolate the load. Modern RCDs have tripping sensitivities between 10 and 30 mA, and therefore a faulty circuit can be isolated before the lower lethal limit to human beings (about 50 mA) is reached.

Consumer units can now be supplied which incorporate an RCD, split boards, where half of the final circuits are RCD protected so that any equipment supplied by the consumer unit to socket outlet circuits or out of doors circuits which are outside the zone created by the protective equipotential bonding, such as a garage or greenhouse, can have the special protection required by IEE Regulations 411.3.3 and 415.1.1.

RCBOs (residual current circuit breakers with overload protection) combine RCD protection and MCB protection into one unit.

In a split board consumer unit, about half of the total number of final circuits are protected by the RCD. A fault on any one final circuit will trip out all of the RCD protected circuits which may cause inconvenience.

The RCBO gives the combined protection of an MCB plus RCD for each final circuit so protected and in the event of a fault occurring only the faulty circuit is interrupted.

Definition

RCBOs give the combined protection of an MCB and an RCD in one device.

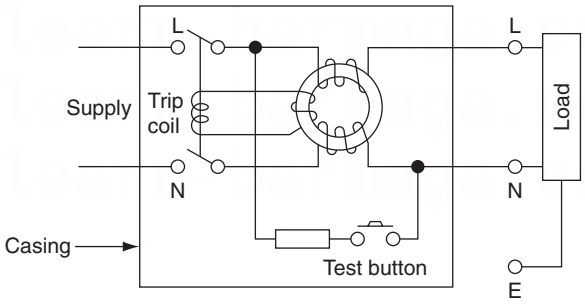

Figure 4.17 Construction of an RCD.

Finally, it should perhaps be said that a foolproof method of giving protection to people or animals who simultaneously touch both live and neutral has yet to be devised. The ultimate safety of an installation depends upon the skill and experience of the electrical contractor and the good sense of the user.

Electricity supply systems

The British government agreed on 1 January 1995 that the electricity supplies in the United Kingdom would be harmonized with those of the rest of Europe. Thus the voltages used previously in low-voltage supply systems of 415 V and 240 V have become 400 V for three-phase supplies and 230 V for single-phase supplies. The Electricity Supply Regulations 1988 have also been amended to permit a range of variation from the new declared nominal voltage. From January 1995 the permitted tolerance is the nominal voltage +10% or −6%. Previously it was ±6%. This gives a voltage range of 216 to 253 V for a nominal voltage of 230 V and 376 to 440 V for a nominal voltage of 400 V (IEE Regulation Appendix 2 par. 14).

It is further proposed that the tolerance levels will be adjusted to ±10% of the declared nominal voltage. All European Union countries will adjust their voltages to comply with a nominal voltage of 230 V single phase and 400 V three phase.

The supply to a domestic, commercial or small industrial consumer's installation is usually protected at the incoming service cable position with a 100 A high breaking capacity (HBC) fuse. The maximum, that is, worst case value of external earth fault loop impedance outside of the consumer's domestic installation is:

- 0.8 Ω for cable sheath earth supplies (TN-S system)
- 0.35 Ω for protective multiple earthing (PME) supplies (TN-C-S system)
- 21.0 Ω excluding the consumer's earth electrode for no earth supplies (TT system).

The maximum, that is, worst case value of prospective short-circuit current is 16 kA at the supply terminals (see *On Site Guide* Part P, Chapter 3).

Other items of equipment at this position are the energy meter and the consumer's distribution unit, providing the protection for the final circuits and the earthing arrangements for the installation.

An efficient and effective earthing system is essential to allow protective devices to operate. The limiting values of earth fault loop impedance are given in Tables 41.2 to 41.4 and Chapter 54 of the IEE Regulations. Wiring Systems of Part 2 gives details of the earthing arrangements to be incorporated in the supply system to meet the requirements of the regulations. Five systems are described in the definitions but only the TN-S, TN-C-S and TT systems are suitable for public supplies.

A system consists of an electrical installation connected to a supply. Systems are classified by a capital letter designation.

The supply earthing

The supply earthing arrangements are indicated by the first letter, where T means one or more points of the supply are directly connected to earth and I means the supply is not earthed or one point is earthed through a fault-limiting impedance.

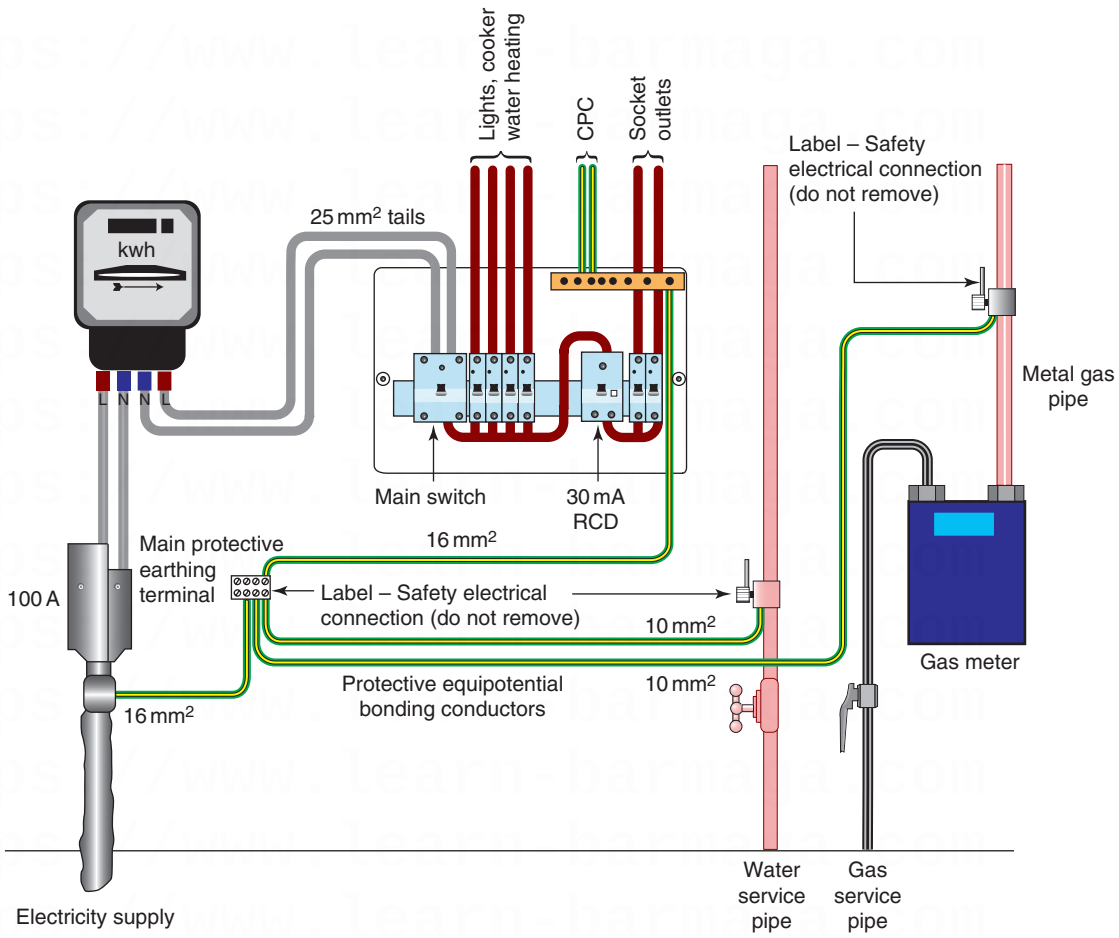

Figure 4.18 Cable sheath earth supplies (TN-S system) showing earthing and bonding arrangements.

The installation earthing

The installation earthing arrangements are indicated by the second letter, where T means the exposed conductive parts are connected directly to earth and N means the exposed conductive parts are connected directly to the earthed point of the source of the electrical supply.

The earthed supply conductor

The earthed supply conductor arrangements are indicated by the third letter, where S means a separate neutral and protective conductor and C means that the neutral and protective conductors are combined in a single conductor.

Cable sheath earth supply (TN-S system)

This is one of the most common types of supply system to be found in the United Kingdom where the electricity companies' supply is provided by underground cables. The neutral and protective conductors are separate throughout the system. The protective earth conductor (PE) is the metal sheath and armour of the underground cable, and this is connected to the consumer's main earthing terminal. All extraneous conductive parts of the installation, gas pipes, water pipes and any lightning protective system are connected to the protective conductor via the main earthing terminal of the installation. The arrangement is shown in Fig. 4.18 and Fig. 2.3 of the IEE Regulations.

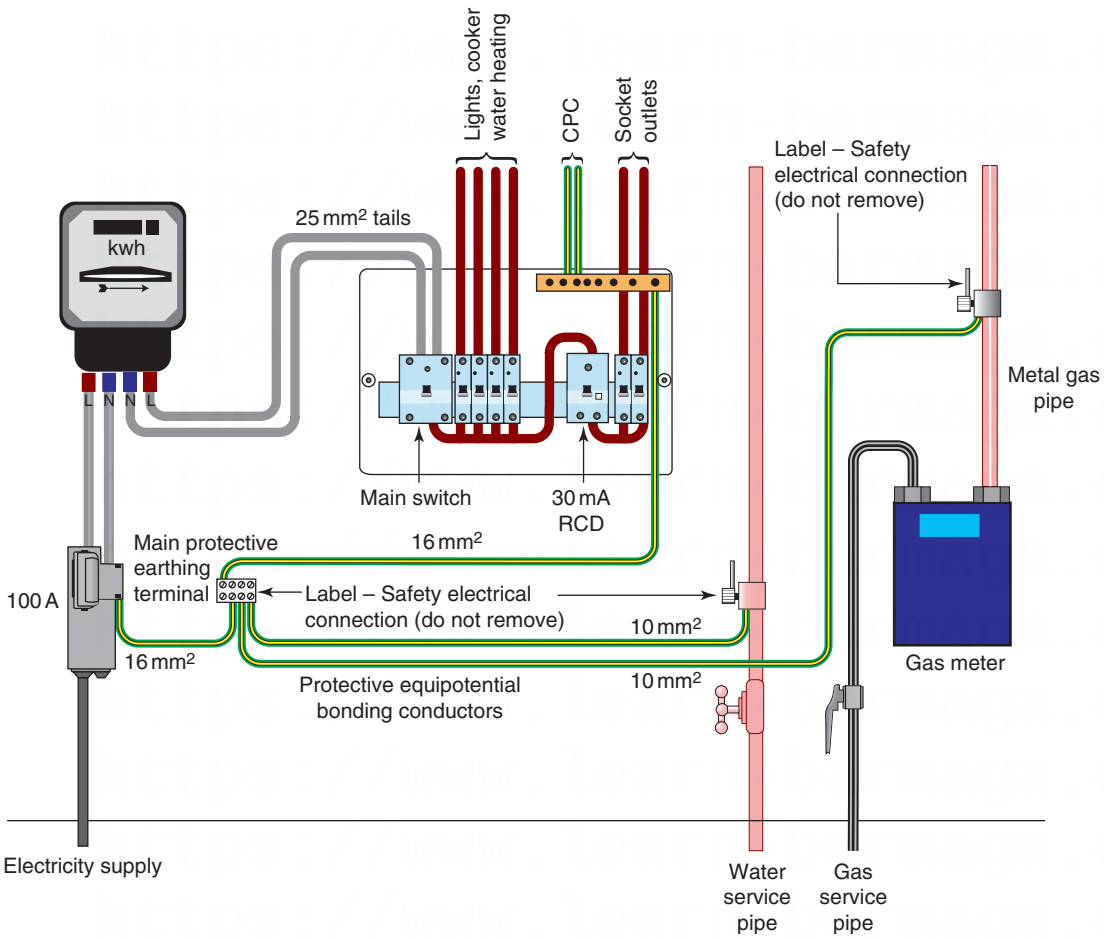

Figure 4.19 Protective multiple earthing supply (TN-C-S system) showing earthing and bonding arrangements.

Protective multiple earthing supplies (TN-C-S system)

This type of underground supply is becoming increasingly popular to supply new installations in the United Kingdom. It is more commonly referred to as protective multiple earthing (PME). The supply cable uses a combined protective earth and neutral conductor (PEN conductor). At the supply intake point a consumer's main earthing terminal is formed by connecting the earthing terminal to the neutral conductor. All extraneous conductive parts of the installation, gas pipes, water pipes and any lightning protective system are then connected to the main earthing terminals. Thus phase to earth faults are effectively converted into phase to neutral faults. The arrangement is shown in Fig. 4.19 and Fig. 2.4 of the IEE Regulations.

No earth provided supplies (TT system)

This is the type of supply more often found when the installation is fed from overhead cables. The supply authorities do not provide an earth terminal and the installation's circuit protective conductors (CPCs) must be connected to earth via an earth electrode provided by the consumer. An effective earth connection is sometimes difficult to obtain and in most cases a residual current device (RCD) is provided when this type of supply is used. The arrangement is shown in Fig. 4.20.

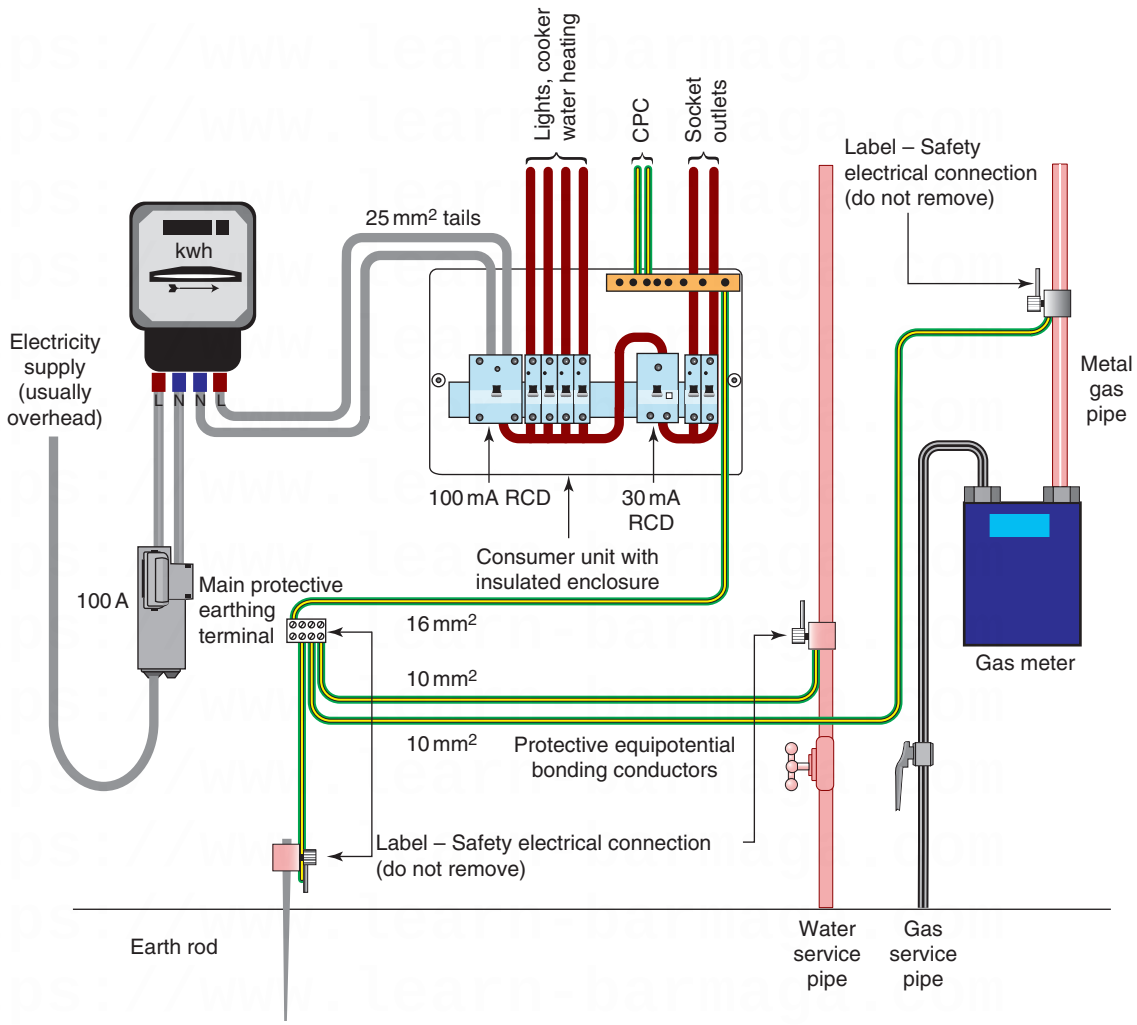

Figure 4.20 No supply earth provided (TT systems) showing earthing and bonding arrangements.

Figures 4.18, 4.19 and 4.20 show the layout of a typical domestic service position for these three supply systems. There are two other systems of supply, the TN-C and IT systems, but they do not comply with the supply regulations and therefore cannot be used for public supplies. Their use is restricted to private generating plants. For this reason I shall not include them here but they can be seen in Part 2 of the IEE Regulations.

Conductor size calculations

The size of a cable to be used for an installation depends upon:

- the current rating of the cable under defined installation conditions and
- the maximum permitted drop in voltage as defined by IEE Regulation 525.

The factors which influence the current rating are:

1. *Design current*: cable must carry the full load current.
2. *Type of cable*: PVC, MICC, copper conductors or aluminium conductors.
3. *Installed conditions*: clipped to a surface or installed with other cables in a trunking.

4 *Surrounding temperature*: cable resistance increases as temperature increases and insulation may melt if the temperature is too high.
5 *Type of protection*: for how long will the cable have to carry a fault current?

IEE Regulation 525 states that the drop in voltage from the supply terminals to the fixed current-using equipment must not exceed 3% for lighting circuits and 5% for other uses of the mains voltage. That is a maximum of 6.9 V for lighting and 11.5 V for other uses on a 230 V installation. The volt drop for a particular cable may be found from:

$$VD = \text{Factor} \times \text{Design current} \times \text{Length of run}$$

The factor is given in the tables of Appendix 4 of the IEE Regulations and Appendix 6 of the *On Site Guide.* They are also given in Table 4.3 in this book.

The cable rating, denoted I_t, may be determined as follows:

$$I_t = \frac{\text{Current rating of protective device}}{\text{Any applicable correction factors}}$$

The cable rating must be chosen to comply with IEE Regulation 433.1. The correction factors which may need applying are given below as:

Ca the ambient or surrounding temperature correction factor, which is given in Tables 4B1 and 4B2 of Appendix 4 of the IEE Regulations. They are also shown in Table 4.3 of this book.
Cg the grouping correction factor given in Tables 4C1 to 4C5 of the IEE Regulations and Table 6C of the *On Site Guide*.
Cc the 0.725 correction factor to be applied when semi-enclosed fuses protect the circuit as described in item 5.1.1 of the preface to Appendix 4 of the IEE Regulations.
Ci the correction factor to be used when cables are enclosed in thermal insulation. IEE Regulation 523.6.6 gives us three possible correction values:

- Where one side of the cable is in contact with thermal insulation we must read the current rating from the column in the table which relates to reference method A (see Table 4.4).
- Where the cable is *totally* surrounded over a length greater than 0.5 m we must apply a factor of 0.5.

Table 4.3 Ambient temperature correction factors. Adapted from the IEE *On Site Guide* by kind permission of the Institution of Electrical Engineers

Table 4B1 of IEE Regulations and 6A of the *On Site Guide*
Correction factors for ambient temperature where protection is against short-circuit and overload

Type of insulation	Operating temperature	Ambient temperature (°C)								
		25	30	35	40	45	50	55	60	65
Thermoplastic (general purpose PVC)	70°C	1.03	1.0	0.94	0.87	0.79	0.71	0.61	0.50	N/A

Table 4.4 Current carrying capacity of cables. Adapted from the IEE *On Site Guide* by kind permission of the Institution of Electrical Engineers

Multicore cables having thermoplastic (PVC) or thermosetting insulation, non-armoured COPPER CONDUCTORS
Table 4D2A of IEE Regulations and Table 6E1 of the *On Site Guide*
Ambient temperature: 30°C. Conductor operating temperature: 70°C
Current-carrying capacity (amperes): BS 6004, BS 7629

Conductor cross-sectional area	Reference Method A (enclosed in conduit in an insulated wall, etc.)		Reference Method B (enclosed in conduit on a wall or ceiling, or in trunking)		Reference Method C (clipped direct)		Reference Method E (on a perforated cable tray) or in free air	
	Two cables single-phase a.c. or d.c.	Three or four cables three-phase a.c.	One two-core cable, single-phase a.c. or d.c.	One three-core cable or one four-core cable, three-phase a.c.	One two-core cable, single-phase a.c. or d.c.	One three-core cable or one four-core cable, three-phase a.c.	One two-core cable, single-phase a.c. or d.c.	One three-core cable or one four-core cable, three-phase a.c.
1 mm²	2 A	3 A	4 A	5 A	6 A	7 A	8 A	9 A
1	11	10	13	11.5	15	13.5	17	14.5
1.5	14	13	16.5	15	19.5	17.5	22	18.5
2.5	18.5	17.5	23	20	27	24	30	25
4	25	23	30	27	37	32	40	34
6	32	29	38	34	46	41	51	43
10	43	39	52	46	63	57	70	60
16	57	52	69	62	85	76	94	80
25	75	68	90	80	112	96	119	101
35	92	83	111	99	138	119	148	126
50	110	99	133	118	168	144	180	153
70	139	125	168	149	213	184	232	196
95	167	150	201	179	258	223	282	238

- Where the cable is *totally* surrounded over a short length, the appropriate factor given in Table 52.2 of the IEE Regulations or Table 6B of the *On Site Guide* should be applied.

Note: A cable should preferably *not* be installed in thermal insulations.

Having calculated the cable rating, I_t the smallest cable should be chosen from the appropriate table which will carry that current. This cable must also meet the voltage drop (IEE Regulation 525) and this should be calculated as described earlier. When the calculated value is less than 3% for lighting and 5% for other uses of the mains voltage the cable may be considered suitable. If the calculated value is greater than this value, the next larger cable size must be tested until **a cable is found which meets both the current rating and voltage drop criteria**.

Example

A house extension has a total load of 6 kW installed some 18 m away from the mains consumer unit for lighting. A PVC insulated and sheathed twin and earth cable will provide a sub-main to this load and be clipped to the side of the ceiling joists over much of its length in a roof space which is anticipated to reach 35°C in the summer and where insulation is installed up to the top of the joists. Calculate the minimum cable size if the circuit is to be protected by a type B MCB to BS EN 60878. Assume a TN-S supply, that is, a supply having a separate neutral and protective conductor throughout.

Let us solve this question using only the tables given in the *On Site Guide*. The tables in the regulations will give the same values, but this will simplify the problem because we can refer to Tables 4.3, 4.4 and 4.5 in this book which give the relevant *On Site Guide* tables.

$$\text{Design current, } I_b = \frac{\text{Power}}{\text{Volts}} = \frac{6000\,\text{W}}{230\,\text{V}} = 26.09\,\text{A}$$

Nominal current setting of the protection for this load $I_n = 32$ A.

The cable rating I_t is given by:

$$I_t = \frac{\text{Current rating of protective device } (I_n)}{\text{The product of the correction factors}}$$

The correction factors to be included in this calculation are:

Ca ambient temperature; as shown in Table 4.3 the correction factor for 35°C is 0.94.

Cg grouping factors need not be applied.

Cc, since protection is by MCB no factor need be applied.

Ci thermal insulation demands that we assume installed method A (see Table 4.4).

The design current is 26.09 A and we will therefore choose a 32 A MCB for the nominal current setting of the protective device, I_n.

$$\text{Cable rating, } I_t = \frac{32}{0.94} = 34.04\,\text{A}$$

(*Continued*)

Key fact

Volt drop
Maximum permissible volt drop on 230 V supplies:

- 3% for lighting = 6.9 V
- 5% for other uses = 11.5 V

IEE Regulation 525 and Appendix 12.

Example (Continued)

From column 2 in Table 4.4, a 10 mm cable, having a rating of 43 A, is required to carry this current.

Now test for volt drop: from Table 4.5 the volt drop per ampere per metre for a 10 mm cable is 4.4 mV. So the volt drop for this cable length and load is equal to:

$$4.4 \times 10^{-3}\ \text{V/Am} \times 26.09\,\text{A} \times 18\,\text{m} = 2.06\,\text{V}$$

Since this is less than the maximum permissible value for a lighting circuit of 6.9 V, a 10 mm cable satisfies the current and drop in voltage requirements when the circuit is protected by an MCB. This cable is run in a loft that gets hot in summer and has thermal insulation touching one side of the cable. We must, therefore, use installed reference method A of Table 4.4. If we were able to route the cable under the floor, clipped direct or in conduit or trunking on a wall, we may be able to use a 6 mm cable for this load. You can see how the current carrying capacity of a cable varies with the installed method by looking at Table 4.4. Compare the values in column 2 with those in column 6. When the cable is clipped direct on to a wall or surface the current rating is higher because the cable is cooler. If the alternative route was longer, you would need to test for volt drop before choosing the cable. These are some of the decisions which the electrical contractor must make when designing an installation which meets the requirements of the customer and the IEE Regulations.

If you are unsure of the standard fuse and MCB rating of protective devices, you can refer to Fig. 3.4 Appendix 3 of the IEE Regulations.

Cable size for standard domestic circuits

Appendix 4 of the IEE Regulations (BS 7671) and Appendix 6 of the IEE *On Site Guide* contain tables for determining the current carrying capacities of conductors which we looked at in the last section. However, for standard domestic circuits, Table 4.6 gives a guide to cable size.

In this table, I am assuming a standard 230 V domestic installation, having a sheathed earth or PME supply terminated in a 100 A HBC fuse at the mains position. Final circuits are fed from a consumer unit, having Type B MCB protection and wired in PVC insulated and sheathed cables with copper conductors having a grey thermoplastic PVC outer sheath or a white thermosetting cable with LSF (low smoke and fume properties). I am also assuming that the surrounding temperature throughout the length of the circuit does not exceed 30°C and the cables are run singly and clipped to a surface.

Wiring systems and enclosures

The final choice of a wiring system must rest with those designing the installation and those ordering the work, but whatever system is employed, good

Table 4.5 Voltage drop in cables factor. Adapted from the IEE *On Site Guide* by kind permission of the Institution of Electrical Engineers

Table 4D2B of IEE Regulations and 6E2 of the On Site Guide			
Voltage drop (per ampere per metre)			**Conductor operating temperature: 70°C**
Conductor cross-sectional area (mm^2) 1	**Two-core cable, d.c. (mV/A/m) 2**	**Two-core cable, single-phase a.c. (mV/A/m) 3**	**Three- or four-core cable, three-phase (mV/A/m) 4**
1	44	44	38
1.5	29	29	25
2.5	18	18	15
4	11	11	9.5
6	7.3	7.3	6.4
10	4.4	4.4	3.8
16	2.8	2.8	2.4
		z	z
25	1.75	1.75	1.50
35	1.25	1.25	1.10
50	0.93	0.94	0.81
70	0.63	0.65	0.57
95	0.46	0.5	0.43

Table 4.6 Cable size for standard domestic circuits

Type of final circuit	Cable size (twin and earth)	MCB rating, Type B (A)	Maximum floor area covered by circuit (m^2)	Maximum length of cable run (m)
Fixed lighting	1.0	6	–	40
Fixed lighting	1.5	6	–	60
Immersion heater	2.5	16	–	30
Storage radiator	2.5	16	–	30
Cooker (oven only)	2.5	16	–	30
13 A socket outlets (radial circuit)	2.5	20	50	30
13 A socket outlets (ring circuit)	2.5	32	100	90
13 A socket outlets (radial circuit)	4.0	32	75	35
Cooker (oven and hob)	6.0	32	–	40
Shower (up to 7.5 kw)	6.0	32	–	40
Shower (up to 9.6 kw)	10	40	–	40

workmanship by competent persons and the use of proper materials is essential for compliance with the regulations (IEE Regulation 134.1.1). The necessary skills can be acquired by an electrical trainee who has the correct attitude and dedication to his craft.

Definition

Cables can be considered to be constructed in three parts: the *conductor* which must be of a suitable cross-section to carry the load current; the *insulation*, which has a colour or number code for identification; and the *outer sheath* which may contain some means of providing protection from mechanical damage.

Most cables can be considered to be constructed in three parts: the **conductor** which must be of a suitable cross-section to carry the load current; the **insulation**, which has a colour or number code for identification; and the **outer sheath** which may contain some means of providing protection from mechanical damage.

The conductors of a cable are made of either copper or aluminium and may be stranded or solid. Solid conductors are only used in fixed wiring installations and may be shaped in larger cables. Stranded conductors are more flexible and conductor sizes from 4.0 to 25 mm^2 contain seven strands. A 10 mm^2 conductor, for example, has seven 1.35 mm diameter strands which collectively make up the 10 mm^2 cross-sectional area of the cable. Conductors above 25 mm^2 have more than seven strands, depending upon the size of the cable. Flexible cords have multiple strands of very fine wire, as fine as one strand of human hair. This gives the cable its very flexible quality.

New wiring colours

Twenty-eight years ago the United Kingdom agreed to adopt the European colour code for flexible cords, that is, brown for live or phase conductor, blue for the neutral conductor and green combined with yellow for earth conductors. However, no similar harmonization was proposed for non-flexible cables used for fixed wiring. These were to remain as red for live or phase conductor, black for the neutral conductor and green combined with yellow for earth conductors.

On 31 March 2004, the IEE published Amendment No. 2 to BS 7671: 2001 which specified new cable core colours for all fixed wiring in UK electrical installations. These new core colours will 'harmonize' the United Kingdom with the practice in mainland Europe.

Fixed cable core colours up to 2006

- *Single-phase* supplies red line conductors, black neutral conductors, and green combined with yellow for earth conductors.
- *Three-phase* supplies red, yellow and blue line conductors, black neutral conductors and green combined with yellow for earth conductors.

These core colours must not be used after 31 March 2006.

New (harmonized) fixed cable core colours

- *Single-phase* supplies brown line conductors, blue neutral conductors and green combined with yellow for earth conductors (just like flexible cords).
- *Three-phase* supplies brown, black and grey line conductors, blue neutral conductors and green combined with yellow for earth conductors.

Cable core colours from 31 March 2004 onwards.

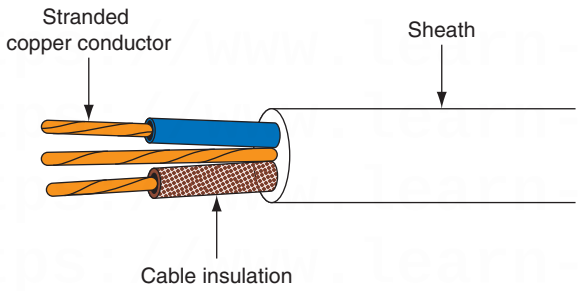

Figure 4.21 A twin and earth PVC insulated and sheathed cable.

Extensions or alterations to existing *single-phase* installations do not require marking at the interface between the old and new fixed wiring colours. However, a warning notice must be fixed at the consumer unit or distribution fuse board which states:

> *Caution – this installation has wiring colours to two versions of BS 7671. Great care should be taken before undertaking extensions, alterations or repair that all conductors are correctly identified.*

Alterations to *three-phase* installations must be marked at the interface L1, L2, L3 for the lines and N for the neutral. Both new and old cables must be marked. These markings are preferred to coloured tape and a caution notice is again required at the distribution board. Appendix 7 of BS 7671: 2008 deals with harmonized cable core colours.

Safety first

PVC cables

- PVC cables should not be installed when the surrounding temperature is below 0°C.
- The PVC insulation becomes brittle at low temperatures and may be damaged during installation.
- IEE Regulation 522.1.2.

PVC insulated and sheathed cables

Domestic and commercial installations use this cable, which may be clipped direct to a surface, sunk in plaster or installed in conduit or trunking. It is the simplest and least expensive cable. Figure 4.21 shows a sketch of a twin and earth cable.

The conductors are covered with a colour-coded PVC insulation and then contained singly or with others in a PVC outer sheath.

PVC/SWA cable

PVC insulated steel wire armour cables are used for wiring underground between buildings, for main supplies to dwellings, rising sub-mains and industrial installations. They are used where some mechanical protection of the cable conductors is required.

The conductors are covered with colour-coded PVC insulation and then contained either singly or with others in a PVC sheath (see Fig. 4.22). Around this sheath is placed an armour protection of steel wires twisted along the length of the cable, and a final PVC sheath covering the steel wires protects them from corrosion. The armour sheath also provides the circuit protective conductor (CPC) and the cable is simply terminated using a compression gland.

MI cable

A mineral insulated (MI) cable has a seamless copper sheath which makes it waterproof and fire- and corrosion-resistant. These characteristics often make it

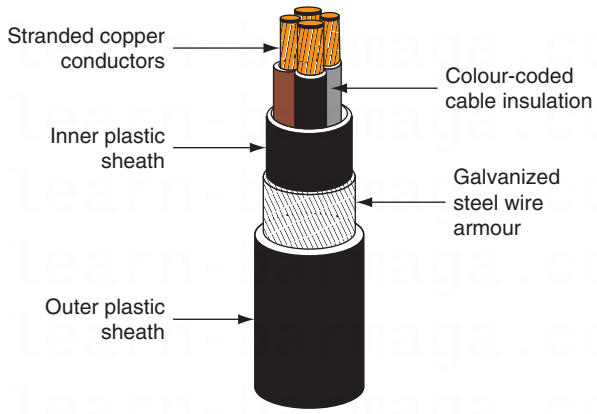

Figure 4.22 A four-core PVC/SWA cable.

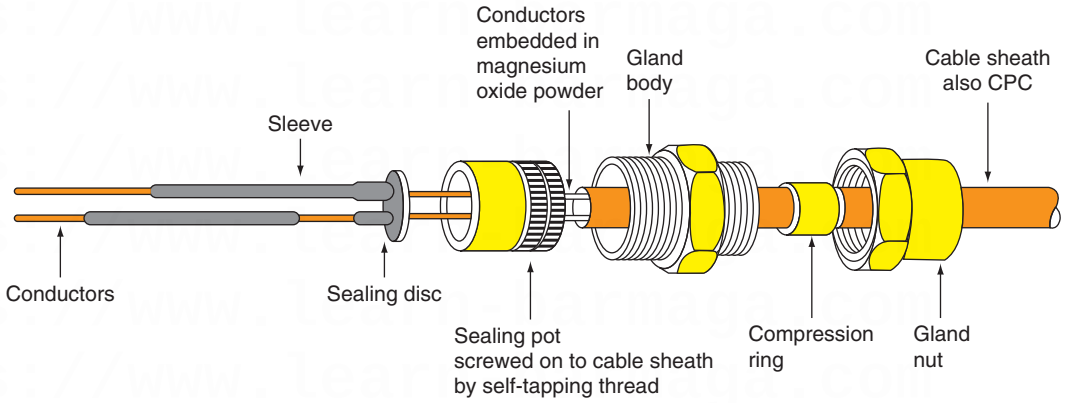

Figure 4.23 MI cable with terminating seal and gland.

the only cable choice for hazardous or high-temperature installations such as oil refineries and chemical works, boiler houses and furnaces, petrol pump and fire alarm installations.

The cable has a small overall diameter when compared to alternative cables and may be supplied as bare copper or with a PVC oversheath. It is colour-coded orange for general electrical wiring, white for emergency lighting or red for fire alarm wiring. The copper outer sheath provides the CPC, and the cable is terminated with a pot and sealed with compound and a compression gland (see Fig. 4.23).

The copper conductors are embedded in a white powder, magnesium oxide, which is non-ageing and non-combustible, but which is hygroscopic, which means that it readily absorbs moisture from the surrounding air, unless adequately terminated. The termination of an MI cable is a complicated process requiring the electrician to demonstrate a high level of practical skill and expertise for the termination to be successful.

FP 200 cable

FP 200 cable is similar in appearance to an MI cable in that it is a circular tube, or the shape of a pencil, and is available with a red or white sheath. However, it is much simpler to use and terminate than an MI cable.

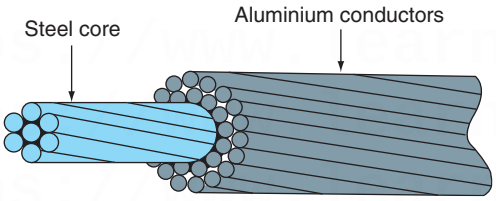

Figure 4.24 132 kV overhead cable construction.

The cable is available with either solid or stranded conductors that are insulated with 'insudite', a fire resistant insulation material. The conductors are then screened, by wrapping an aluminium tape around the insulated conductors, that is, between the insulated conductors and the outer sheath. This aluminium tape screen is applied metal side down and in contact with the bare CPC.

The sheath is circular and made of a robust thermoplastic low smoke, zero halogen material.

FP 200 is available in 2, 3, 4, 7, 12 and 19 cores with a conductor size range from 1.0 to 4.0 mm. The core colours are: two core, red and black, three core, red, yellow and blue and four core, black, red, yellow and blue.

The cable is as easy to use as a PVC insulated and sheathed cable. No special terminations are required; the cable may be terminated through a grommet into a knock-out box or terminated through a simple compression gland.

The cable is a fire resistant cable, primarily intended for use in fire alarms and emergency lighting installations or it may be embedded in plaster.

High-voltage power cables

The cables used for high-voltage power distribution require termination and installation expertise beyond the normal experience of a contracting electrician. The regulations covering high-voltage distribution are beyond the scope of the IEE Regulations for electrical installations. Operating at voltages in excess of 33 kV and delivering thousands of kilowatts, these cables are either suspended out of reach on pylons or buried in the ground in carefully constructed trenches.

High-voltage overhead cables

Suspended from cable towers or pylons, overhead cables must be light, flexible and strong.

The cable is constructed of stranded aluminium conductors formed around a core of steel stranded conductors (see Fig. 4.24). The aluminium conductors carry the current and the steel core provides the tensile strength required to suspend the cable between pylons. The cable is not insulated since it is placed out of reach and insulation would only add to the weight of the cable.

Component parts of an electrical circuit

For a piece of electrical equipment to work efficiently and effectively it must be correctly connected to an electrical circuit. So what is an electrical circuit?

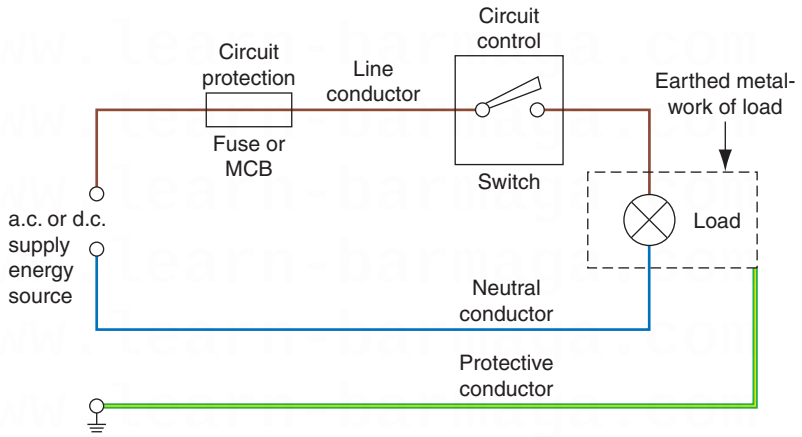

Figure 4.25 Component parts of an electric circuit.

An electrical circuit has the following five components as shown in Fig. 4.25:

- a source of electrical energy. This might be a battery giving a d.c. (direct current) supply or the mains supply which is a.c. (alternating current)
- a source of circuit protection. This might be a fuse or circuit breaker which will protect the circuit from 'overcurrent'
- the circuit conductors or cables. These carry voltage and current to power the load
- a means to control the circuit. This might be a simple on/off switch but it might also be a dimmer or a thermostat
- and a load. This is something which needs electricity to make it work. It might be an electric lamp, an electrical appliance, an electric motor or an iPod.

Choosing an appropriate wiring system

An electrical installation is made up of many different electrical circuits, lighting circuits, power circuits, single-phase domestic circuits and three-phase industrial or commercial circuits.

Whatever the type of circuit, the circuit conductors are contained within cables or enclosures.

Part 5 of the IEE Regulations tells us that electrical equipment and materials must be chosen so that they are suitable for the installed conditions, taking into account temperature, the presence of water, corrosion, mechanical damage, vibration or exposure to solar radiation. Therefore, PVC insulated and sheathed cables are suitable for domestic installations but for a cable requiring mechanical protection and suitable for burying underground, a PVC/SWA cable would be preferable. These two types of cable are shown in Figs 4.21 and 4.22 of this chapter.

MI cables are waterproof, heatproof and corrosion resistant with some mechanical protection. These qualities often make it the only cable choice for hazardous or high-temperature installations such as oil refineries, chemical works, boiler houses and petrol pump installations. An MI cable with terminating gland and seal is shown in Fig. 4.23.

We will be looking in detail at all of the different wiring systems and circuits later in this book in Chapter 5.

Check your understanding

When you have completed the questions, check out the answers at the back of the book.

Note: more than one multiple choice answer may be correct.

1 'The conductive mass of the earth' is one definition of:
   a. earth
   b. earthing
   c. bonding conductor
   d. circuit protective conductor.

2 A protective conductor connecting exposed conductive parts of equipment to the main earthing terminal is one definition of:
   a. earth
   b. earthing
   c. bonding conductor
   d. circuit protective conductor.

3 A protective conductor connecting exposed and extraneous parts together is one definition of:
   a. earth
   b. earthing
   c. bonding conductor
   d. circuit protective conductor.

4 The act of connecting the exposed conductive parts of the installation to the main earthing terminal is called:
   a. earth
   b. earthing
   c. bonding conductor
   d. circuit protective conductor.

5 The act of linking together the exposed and extraneous metal parts is called:
   a. earthing
   b. bonding
   c. basic protection
   d. fault protection.

6 The protection provided by insulating live parts is called:
   a. extraneous conductive parts
   b. basic protection
   c. exposed conductive parts
   d. fault protection.

7. The metalwork of the electrical installation is called:
   a. extraneous conductive parts
   b. basic protection
   c. exposed conductive parts
   d. fault protection.

8 The metalwork of the building and other service pipes is called:
   a. extraneous conductive parts
   b. basic protection
   c. exposed conductive parts
   d. fault protection.

9 The protection provided by equipotential bonding and automatic disconnection of the supply is called:
   a. extraneous conductive parts
   b. basic protection
   c. exposed conductive parts
   d. fault protection.

10 Cutting off the electrical supply in order to ensure the safety of those working on the equipment is one definition of:
   a. basic protection
   b. fault protection
   c. equipotential bonding
   d. isolation switching.

11 A current which exceeds the rated current in an otherwise healthy circuit is one definition of:
   a. fault protection
   b. an overcurrent
   c. an overload current
   d. a short-circuit current.

12 The weakest link in the circuit designed to melt when an overcurrent flows is one definition of:
   a. fault protection
   b. a circuit protective conductor
   c. a fuse
   d. a consumer unit.

13 According to IEE Regulation 411.3.2.2 all final circuits not exceeding 32 A in a building supplied with a 230 V TN supply shall have a maximum disconnection time not exceeding:
   a. 0.2 s
   b. 0.4 s
   c. 5.0 s
   d. unlimited.

14 To ensure the effective operation of the overcurrent protective devices, the earth fault loop path must have:
   a. a 230 V supply
   b. a very low resistance
   c. fuses or MCBs in the live conductor
   d. a very high resistance.

15 Electricity is generated in large commercial power stations at:
a. 230 V
b. 400 V
c. 25 kV
d. 132 kV.

16 Transmission of electricity on the national grid network takes place at:
a. 230 V
b. 400 V
c. 25 kV
d. 132 kV.

17 Electricity is transmitted at very high voltages because for a given power the:
a. current is reduced
b. current is increased
c. losses are reduced
d. losses are increased.

18 Electricity is distributed from the local sub-stations by underground cables at:
a. 230 V
b. 400 V
c. 25 kV
d. 132 kV.

19 A load connected to the three phases of a star-connected three-phase four-wire supply system from the local sub-station would have a voltage of:
a. 230 V
b. 400 V
c. 25 kV
d. 132 kV.

20 A load connected to phase and neutral of a star-connected three-phase four-wire supply system from the local sub-station would have a voltage of:
a. 230 V
b. 400 V
c. 25 kV
d. 132 kV.

21 The phase voltage of a star connected load is 100 V. The line voltage will be:
a. 57.73 V
b. 100 V
c. 173.2 V
d. 230 V.

22 The phase voltage of a delta connected load is 100 V. The line voltage will be:
a. 57.73 V
b. 100 V
c. 173.2 V
d. 230 V.

23 The phase current of a star connected load is 100 A. The line current will be:
a. 57.73 A
b. 100 A
c. 173.2 A
d. 230 A.

24 The phase current of a delta connected load is 100 A. The line current will be:
a. 57.73 A
b. 100 A
c. 173.2 A
d. 230 A.

25 An electrical cable is made up of three parts which are:
a. conduction, convection and radiation
b. conductor, insulation and outer sheath
c. heating, magnetic and chemical
d. conductors and insulators.

26 An appropriate wiring method for a domestic installation would be a:
a. metal conduit installation
b. trunking and tray installation
c. PVC cables
d. PVC/SWA cables.

27 An appropriate wiring method for an underground feed to a remote building would be a:
a. metal conduit installation
b. trunking and tray installation
c. PVC cables
d. PVC/SWA cables.

28 An appropriate wiring method for a high-temperature installation in a boiler house is:
a. metal conduit installation
b. trunking and tray installation
c. FP 200 cables
d. MI cables.

29 The cables suspended from the transmission towers of the national grid network are made from:
a. copper and brass
b. copper with PVC insulation
c. aluminium and steel
d. aluminium and porcelain.

30 An appropriate wiring system for a three-phase industrial installation would be:
a. PVC cables
b. PVC conduit
c. one which meets the requirements of Part 2 of the IEE Regulations
d. one which meets the requirements of Part 5 of the IEE Regulations.

31 A current which exceeds the rated value in an otherwise healthy circuit is one definition of:
   a. earthing
   b. bonding
   c. overload
   d. short circuit.

32 An overcurrent resulting from a fault of negligible impedance is one definition of:
   a. earthing
   b. bonding
   c. overload
   d. short circuit.

33 The connection of the exposed conductive parts of an installation to the main protective earthing terminal of the installation is one definition of:
   a. earthing
   b. protective equipotential bonding
   c. overload
   d. short circuit.

34 The linking together of the exposed or extraneous conductive parts of an installation for the purpose of safety is one definition of:
   a. earthing
   b. protective equipotential bonding
   c. exposed conductive parts
   d. extraneous conductive parts.

35 The conduit and trunking parts of the electrical installation are:
   a. earth conductors
   b. bonding conductors
   c. exposed conductive parts
   d. extraneous conductive parts.

36 The gas, water and central heating pipes of the building not forming a part of the electrical installation are called:
   a. earthing conductors
   b. bonding conductors
   c. exposed conductive parts
   d. extraneous conductive parts.

37 The protection provided by insulating the live parts of the electrical installation is called:
   a. overload protection
   b. short circuit protection
   c. basic protection
   d. fault protection.

38 The protection provided by protective equipotential bonding and automatic disconnection of the supply is called:
   a. overload protection
   b. short circuit protection

c. basic protection
d. fault protection.

39 Briefly explain why an electrical installation needs protective devices.

40 List the four factors on which the selection of a protective device depends.

41 List the five essential requirements for a device designed to protect against overcurrent.

42 Briefly describe the action of a fuse under fault conditions.

43 State the meaning of 'discrimination' as applied to circuit protective devices.

44 Use a sketch to show how 'discrimination' can be applied to a piece of equipment connected to a final circuit.

45 List typical 'exposed parts' of an installation.

46 List typical 'extraneous parts' of a building.

47 Use a sketch to show the path taken by an earth fault current.

48 Use bullet points and a simple sketch to briefly describe the operation of an RCD.

49 State the need for RCDs in an electrical installation:
a. supplying socket outlets with a rated current not exceeding 20 A and
b. for use by mobile equipment out of doors as required by IEE Regulation 411.3.3.

50 Briefly describe an application for RCBOs.

51 State the meaning of fault protection.

52 State the meaning of basic protection.

53 State the meaning of a 'polyphase supply system'.

54 State the standard voltages used for generation, transmission and distribution in the United Kingdom.

55 Environmentalists often say that steel transmission towers are a 'blot on the landscape'. Why do we continue to use steel towers for transmission on the national grid network?

56 Why is the distribution from local sub-stations to end users, for the most part, by underground cables in the United Kingdom?

57 State the reasons for balancing single-phase loads across a three-phase supply.

58 Briefly describe how and why we generate a three-phase supply compared to a single-phase supply.

59 What are the advantages of connecting a three-phase supply:
a. in delta
b. in star.

60 Produce a quick coloured sketch of a PVC insulated and sheathed cable and name the parts.

61 Produce a quick coloured sketch of a PVC/SWA cable and name the parts.

62 Produce a quick sketch of an electric circuit and name the five component parts.

63 Give an example of a device or accessory for each component part. For example, the supply might be from the a.c. mains or a battery.

64 In your own words state the meaning of circuit overload and short circuit protection. What will provide this type of protection?

65 State the purpose of earthing and earth protection. What do we do to achieve it and why do we do it?

66 In your own words state the meaning of exposed and extraneous conductive parts and give examples of each.

67 In your own words state the meaning of earthing and bonding. What type of cables and equipment would an electrician use to achieve earthing and bonding on an electrical installation?

68 In your own words state what we mean by 'basic protection' and how is it achieved.

69 In your own words state what we mean by 'fault protection' and how it is achieved.

This page intentionally left blank

https://www.learn-barmaga.com
https://www.learn-barmaga.com
https://www.learn-barmaga.com

CHAPTER 5

Preparation and installation of wiring systems

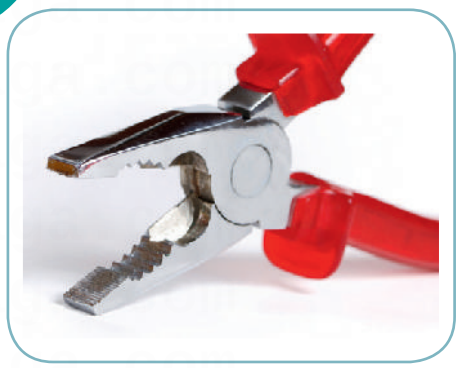

Unit 305 of the City and Guilds 2357 syllabus

Understanding the practices and procedures for the preparation and installation of wiring systems and electrotechnical equipment in buildings, structures and the environment.

Online Material WWW

This chapter has free associated content, including animations and instructional videos, to support your learning

When you see the logo, visit the website below to access this material:

www.elsevierdirect.com/companions/9780080966281

Communications

When we talk about good communications we are talking about transferring information from one person to another both quickly and accurately. We do this by talking to other people, looking at drawings and plans and discussing these with colleagues from the same company and with other professionals who have an interest in the same project. The technical information used within our industry comes from many sources. The IEE Regulations (BS 7671) are the 'electrician's bible' and form the basis of all our electrical design calculations and installation methods. British Standards, European Harmonised Standards and Codes of Practice provide detailed information for every sector of the electrotechnical industry, influencing all design and build considerations.

Sources of technical information

Equipment and accessories available to use in a specific situation can often be found in the very comprehensive manufacturers' catalogues and

Basic Electrical Installation Work. 978-0-08-096628-1

the catalogues of the major wholesalers that service the electrotechnical industries.

All of this technical information may be distributed and retrieved by using:

- conventional drawings and diagrams which we will look at in more detail below
- sketch drawings to illustrate an idea or the shape of say a bracket to hold a piece of electrical equipment
- the Internet can be used to download British Standards and Codes of Practice
- the Internet can also be used to download health and safety information from the Health and Safety Executive at: www.gov.uk/hse or www.opsi.gov.uk
- CDs, DVDs, USB memory sticks and email can be used to communicate and store information electronically
- the facsimile (Fax) machine can be used to communicate with other busy professionals, information say about a project you are working on together.

If you are working at your company office with access to online computers, then technical information is only a fingertip or mouse click away. However, a construction site is a hostile environment for a laptop and so a hard copy of any data is preferable on site.

Let us now look at the types of drawings and diagrams which we use within our industry to communicate technical information between colleagues and other professionals. The type of diagram to be used in any particular situation is the one which most clearly communicates the desired information.

Site plans or layout drawings

These are scale drawings based upon the architect's site plan of the building and show the position of the electrical equipment which is to be installed. The electrical equipment is identified by a graphical symbol. The standard symbols used by the electrical contracting industry are those recommended by the British Standard EN 60617, *Graphical Symbols for Electrical Power, Telecommunications and Electronic Diagrams*. Some of the more common electrical installation symbols are given in Fig. 5.1.

The site plan or layout drawing will be drawn to a scale smaller than the actual size of the building, so to find the actual measurement, you must measure the distance on the drawing and multiply by the scale.

For example, if the site plan is drawn to a scale of 1:100, then 10 mm on the site plan represents 1 m measured in the building.

The layout drawing or site plan of a small domestic extension is shown in Fig. 5.2. It can be seen that the mains intake position, probably a consumer unit, is situated in the storeroom which also contains one light controlled by a switch at the door. The bathroom contains one lighting point controlled by a one-way pull switch at the door. The kitchen has two doors and a switch is installed at each door to control the fluorescent luminaire. There are also three double sockets situated around the kitchen. The sitting room has a two-way switch at each door controlling the centre lighting point. Two wall lights with

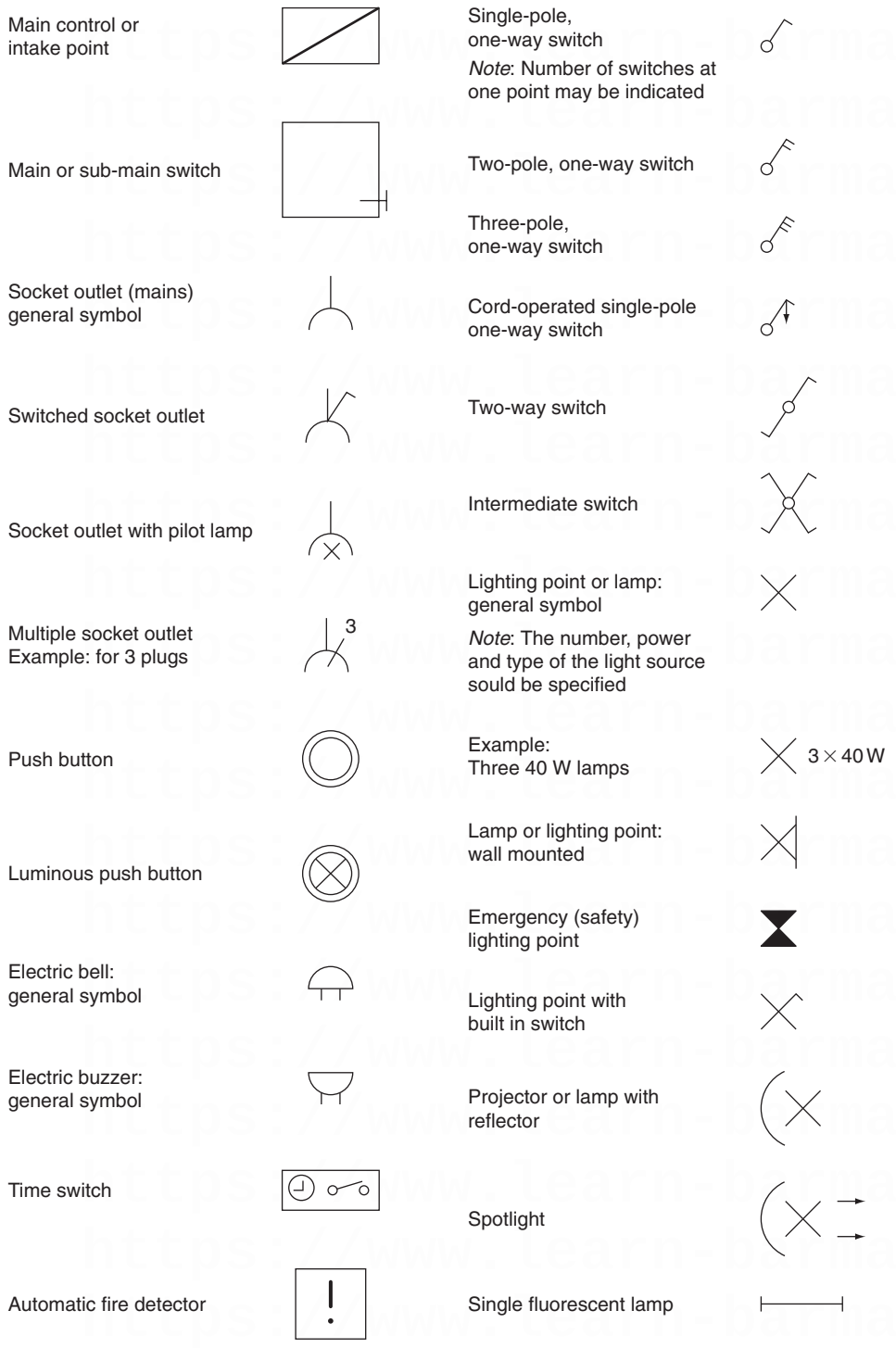

Figure 5.1 Some BS EN 60617 electrical installation symbols.

built-in switches are to be wired, one at each side of the window. Two double sockets and one switched socket are also to be installed in the sitting room. The bedroom has two lighting points controlled independently by two one-way switches at the door. The wiring diagrams and installation procedures for all these circuits can be found in later chapters.

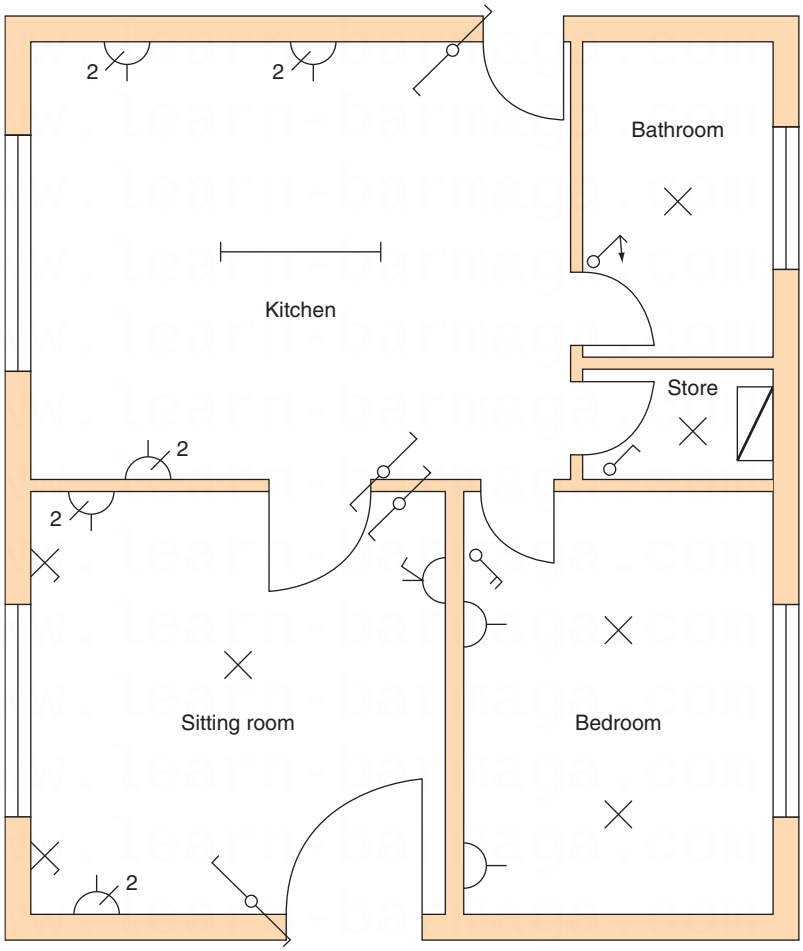

Figure 5.2 Layout drawing or site plan of a small electrical installation.

Try this

Drawings

The next time you are on site ask your supervisor to show you the site plans. Ask him:

- how does the scale work?
- to put names to the equipment represented by British Standard symbols.

As-fitted drawings

When the installation is completed a set of drawings should be produced which indicate the final positions of all the electrical equipment. As the building and electrical installation progresses, it is sometimes necessary to modify the positions of equipment indicated on the layout drawing because, for example, the position of a doorway has been changed. The layout drawings or site plans indicate the original intentions for the position of equipment, while the 'as-fitted' drawings indicate the actual positions of equipment upon completion of the contract.

Try this

Drawings

Take a moment to clarify the difference between:

- layout drawings and
- as-fitted drawings.

Detail drawings and assembly drawings

These are additional drawings produced by the architect to clarify some point of detail. For example, a drawing might be produced to give a fuller description of a suspended ceiling arrangement or the assembly arrangements of the metalwork for the suspended ceiling.

Location drawings

Location drawings identify the place where something is located. It might be the position of the manhole covers giving access to the drains. It might be the position of all water stop taps or the position of the emergency lighting fittings. This type of information may be placed on a blank copy of the architect's site plan or on a supplementary drawing.

Distribution cable route plans

On large installations there may be more than one position for the electrical supplies. Distribution cables may radiate from the site of the electrical mains intake position to other sub-mains positions. The site of the sub-mains and the route taken by the distribution cables may be shown on a blank copy of the architect's site plan or on the electrician's 'as-fitted' drawings.

Block diagrams

A block diagram is a very simple diagram in which the various items or pieces of equipment are represented by a square or rectangular box. The purpose of the block diagram is to show how the components of the circuit relate to each other and, therefore, the individual circuit connections are not shown. Figure 5.3 shows the block diagram of a space heating control system.

Wiring diagrams

A wiring diagram or connection diagram shows the detailed connections between components or items of equipment. It does not indicate how a piece of equipment or circuit works. The purpose of a wiring diagram is to help someone with the actual wiring of the circuit. Figure 5.4 shows the wiring diagram for a space heating control system.

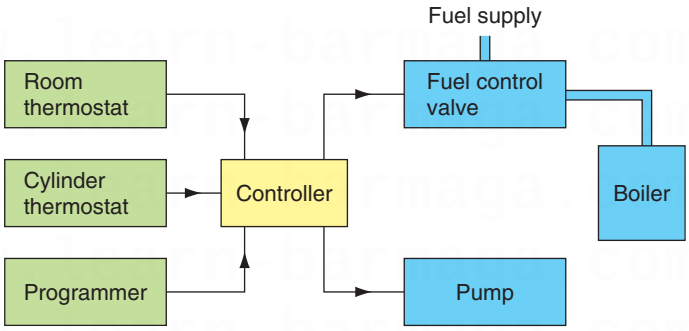

Figure 5.3 Block diagram – space heating control system (Honeywell Y. Plan).

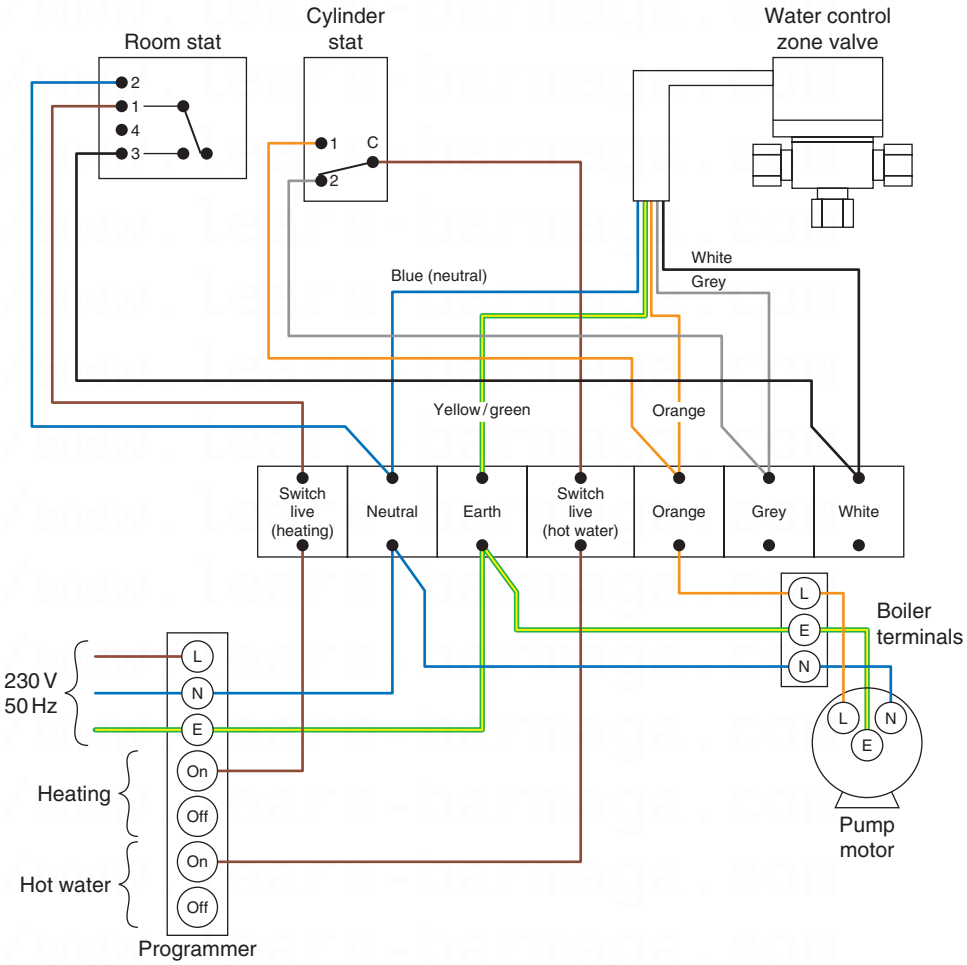

Figure 5.4 Wiring diagram – space heating control system (Honeywell Y. Plan).

Circuit diagrams

A circuit diagram shows most clearly how a circuit works. All the essential parts and connections are represented by their graphical symbols. The purpose of a circuit diagram is to help our understanding of the circuit. It will be laid out as clearly as possible, without regard to the physical layout of the actual components and, therefore, it may not indicate the most convenient way to

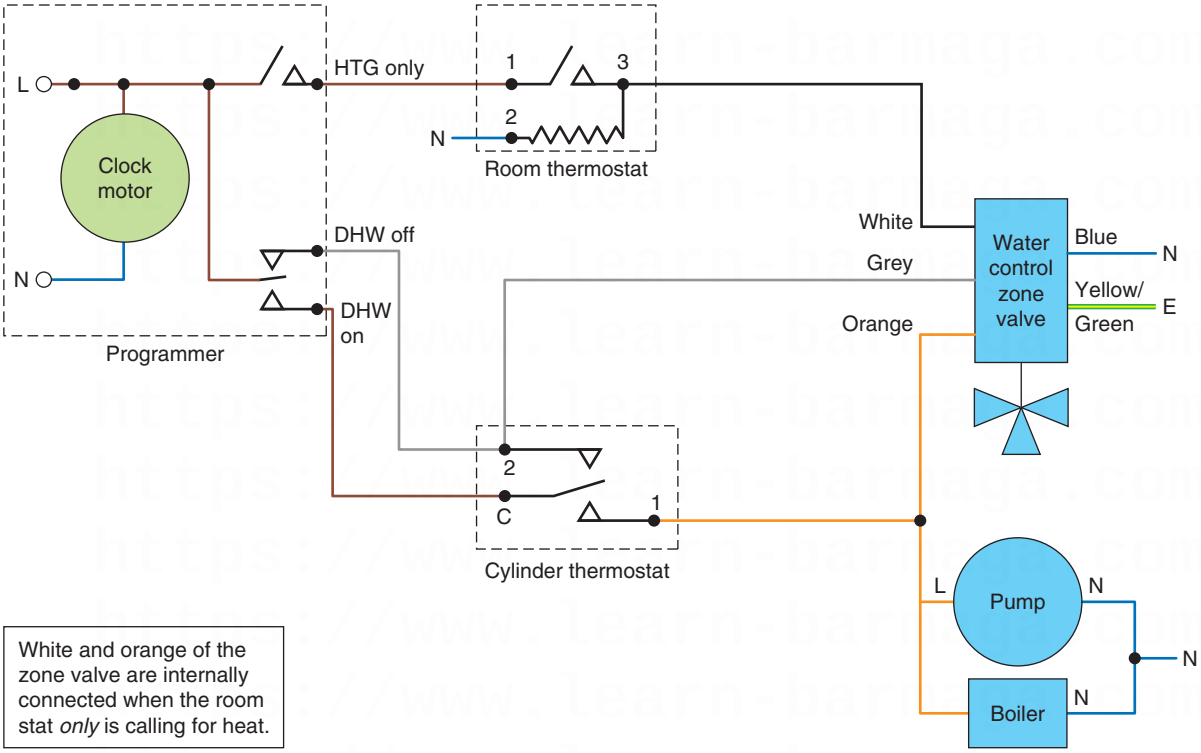

Figure 5.5 Circuit diagram – space heating control system (Honeywell Y. plan).

wire the circuit. Figure 5.5 shows the circuit diagram of our same space heating control system shown in the wiring diagram of Fig. 5.4.

Schematic diagrams

A schematic diagram is a diagram in outline of, for example, a motor starter circuit. It uses graphical symbols to indicate the interrelationship of the electrical elements in a circuit. These help us to understand the working operation of the circuit but are not helpful in showing us how to wire the components. An electrical schematic diagram looks very like a circuit diagram. Figure 5.6 shows a schematic diagram.

Freehand working diagrams

Freehand working drawings or sketches are another important way in which we communicate our ideas. The drawings of the spring toggle bolt (Fig. 5.46) were done from freehand sketches. A freehand sketch may be done as an initial draft of an idea before a full working drawing is made. It is often much easier to produce a sketch of your ideas or intentions than to describe them or produce a list of instructions.

To convey the message or information clearly it is better to make your sketch large rather than too small. It should also contain all the dimensions necessary to indicate clearly the size of the finished object depicted by the sketch.

All drawings and communications must be aimed at satisfying the client's wishes for the project. It is the client who will pay the final bill which, in turn, pays your wages. The detailed arrangements of what must be done to meet the client's wishes are

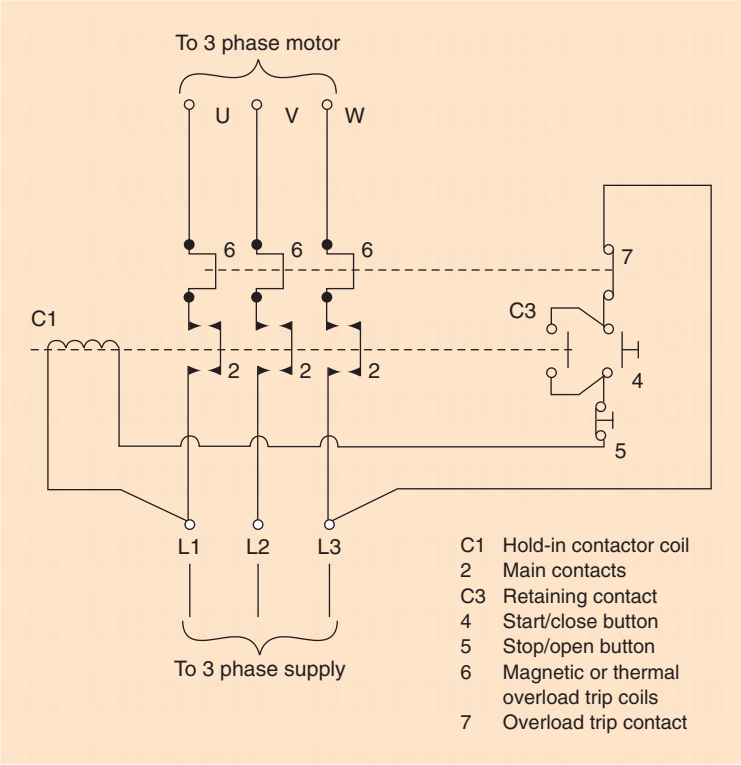

Figure 5.6 Schematic diagram – DOL motor starter.

contained in the client's specification documents and all your company's efforts must be directed at meeting the whole specification, but no more.

Telephone communications

Telephones today play one of the most important roles in enabling people to communicate with each other. You are never alone when you have a telephone. If there is a problem, you can ring your supervisor or foreman for help. The advantage of a telephone message over a written message is its speed; the disadvantage is that no record is kept of an agreement made over the telephone. Therefore, business agreements made on the telephone are often followed up by written confirmation.

When *taking* a telephone call, remember that you cannot be seen and, therefore, gestures and facial expressions will not help to make you understood. Always be polite and helpful when answering your company's telephone – you are your company's most important representative at that moment. Speak clearly and loud enough to be heard without shouting, sound cheerful and write down messages if asked. Always read back what you have written down to make sure that you are passing on what the caller intended.

Many companies now use standard telephone message pads such as that shown in Fig. 5.7 because they prompt people to collect all the relevant information. In this case, John Gall wants Dave Twem to pick up the Megger from Jim on Saturday and take it to the Bispham site on Monday. The person taking the call and relaying the message is Dave Low.

When *making* a telephone call, make sure you know what you want to say or ask. Make notes so that you have times, dates and any other relevant information ready before you make the call.

FLASH-BANG ELECTRICAL TELEPHONE MESSAGES

Date *Thurs 11 Aug. 10* Time *09.30*

Message to *Dave Twem*

Message from (Name) *John Gall*

(Address) *Bispham Site*

Blackpool.

(Telephone No.) *(01253) 123456*

Message *Pick up Megger*

from Jim on Saturday and take to Bispham

site on Monday.

Thanks

Message taken by *Dave Lan*

Figure 5.7 Typical standard telephone message pad.

Regulations and responsibilities

During the period of development of the electricity services, particularly in the early days, poor design and installation led to many buildings being damaged by fire and the electrocution of human beings and livestock. It was the insurance companies which originally drew up a set of rules and guidelines of good practice in the interest of reducing the number of claims made upon them. The first rules were made by the American Board of Fire Underwriters and were quickly followed by the Phoenix Rules of 1882. In the same year the first edition of the Rules and Regulations for the Prevention of Fire Risk arising from Electrical Lighting was issued by the Institution of Electrical Engineers.

The current edition of these regulations is called the Requirements for Electrical Installations, IEE Wiring Regulations (BS 7671: 2008), and since June 2008 we have been using the 17th edition. All the rules have been revised, updated and amended at regular intervals to take account of modern developments, and the 17th edition brought the UK Regulations into harmony with those of the rest of Europe. The electrotechnical industry is now controlled by many rules, regulations and standards.

In Chapter 1 of this book we looked at a number of statutory and non-statutory regulations as they apply to the electrotechnical industry. In this section we will look at our responsibilities in our working environment.

The Health and Safety at Work Act 1974

The Health and Safety at Work Act provides a legal framework for stimulating and encouraging high standards of health and safety for everyone at work and the public at large from risks arising from work activities. The Act was a result of recommendations made by a Royal Commission in 1970 which looked at the health and safety of employees at work, and concluded that the main cause of accidents was apathy on the part of employer and employee. The Act places the responsibility for safety at work on both the employer and the employee.

The employer has a duty to care for the health and safety of employees (Section 2 of the Act). To do this he must ensure that:

- the working conditions and standard of hygiene are appropriate;
- the plant, tools and equipment are properly maintained;
- the necessary safety equipment – such as personal protective equipment, dust and fume extractors and machine guards – is available and properly used;
- the workers are trained to use equipment and plant safely.

Employees have a duty to care for their own health and safety and that of others who may be affected by their actions (Section 7 of the Act). To do this they must:

- take reasonable care to avoid injury to themselves or others as a result of their work activity;
- co-operate with their employer, helping him or her to comply with the requirements of the Act;
- not interfere with or misuse anything provided to protect their health and safety.

Failure to comply with the Health and Safety at Work Act is a criminal offence and any infringement of the law can result in heavy fines, a prison sentence or both.

Enforcement

Laws and rules must be enforced if they are to be effective. The system of control under the Health and Safety at Work Act comes from the Health and Safety Executive (HSE) which is charged with enforcing the law. The HSE is divided into a number of specialist inspectorates or sections which operate from local offices throughout the United Kingdom. From the local offices the inspectors visit individual places of work.

Safety documentation

Under the Health and Safety at Work Act, the employer is responsible for ensuring that adequate instruction and information is given to employees to make them safety-conscious. Part 1, Section 3 of the Act instructs all employers to prepare a written health and safety policy statement and to bring this to the notice of all employees.

To promote adequate health and safety measures, the employer must consult with the employees' safety representatives. All actions of the safety representatives should be documented and recorded as evidence that the company takes seriously its health and safety policy.

The Act provides for criminal proceedings to be taken against those who do not satisfy the requirements of the Regulations.

Under the general protective umbrella of the Health and Safety at Work Act, other pieces of legislation also affect those working in the electrotechnical industry.

The Electricity at Work Regulations 1989 (EWR)

This legislation came into force in 1990 and replaced earlier regulations such as the Electricity (Factories Act) Special Regulations 1944. The regulations are made under the Health and Safety at Work Act and enforced by the Health and Safety Executive. The purpose of the regulations is to 'require precautions to be taken against the risk of death or personal injury from electricity in work activities'.

Section 4 of the EWR tells us that 'all systems must be constructed so as to prevent danger …, and be properly maintained.… Every work activity shall be carried out in a manner which does not give rise to danger.… In the case of work of an electrical nature, it is preferable that the conductors be made dead before work commences'.

The EWR do not tell us specifically how to carry out our work activities and ensure compliance, but if proceedings were brought against an individual for breaking the EWR, the only acceptable defence would be 'to prove that all reasonable steps were taken and all diligence exercised to avoid the offence' (Regulation 29).

An electrical contractor could reasonably be expected to have 'exercised all diligence' if the installation was wired according to the IEE Wiring Regulations (see below) and this is confirmed in the 17th edition at Regulation 114.

Duty of care

The Health and Safety at Work Act and the Electricity at Work Regulations make numerous references to employer and employees having a '**duty of care**' for the health and safety of others in the work environment. In this context the Electricity at Work Regulations refer to a person as a '**duty holder**'. This phrase recognizes the level of responsibility which electricians are expected to take on as a part of their job in order to control electrical safety in the work environment.

Everyone has a duty of care, but not everyone is a duty holder. The regulations recognize the amount of control that an individual might exercise over the whole electrical installation. The person who exercises 'control over the whole systems, equipment and conductors' and is the electrical company's representative on-site, is the *duty holder*. He might be a supervisor or manager, but he will have a duty of care on behalf of his employer for the electrical, health, safety and environmental issues on that site.

Duties referred to in the regulations may have the qualifying terms '**reasonably practicable**' or '**absolute**'. If the requirement of the regulation is absolute, then that regulation must be met regardless of cost or any other consideration. If the regulation is to be met 'so far as is reasonably practicable', then risks, cost, time, trouble and difficulty can be considered.

Often there is a cost-effective way to reduce a particular risk and prevent an accident occurring. For example, placing a fireguard in front of the fire at home when there are young children in the family is a reasonably practicable way of reducing the risk of a child being burned.

Definitions

'*Duty holder*', this phrase recognizes the level of responsibility which electricians are expected to take on as a part of their job in order to control electrical safety in the work environment.

Everyone has a duty of care, but not everyone is a *duty holder*.

The person who exercises 'control over the whole systems, equipment and conductors' and is the electrical company's representative on-site is a *duty holder*.

'*Reasonably practicable*' or '*absolute*', if the requirement of the regulation is absolute, then that regulation must be met regardless of cost or any other consideration. If the regulation is to be met 'so far as is reasonably practicable', then risks, cost, time, trouble and difficulty can be considered.

Safety first

Duty Holder

- This person has the responsibility to control electrical safety in the work environment.

If a regulation is not qualified with 'so far as is reasonably practicable', then it must be assumed that the regulation is absolute. In the context of the Electricity at Work Regulations, where the risk is very often death by electrocution, the level of duty to prevent danger more often approaches that of an absolute duty of care.

The IEE Wiring Regulations 17th edition (BS 7671: 2008)

The Institution of Electrical Engineers Requirements for Electrical Installations (the IEE Wiring Regulations) are non-statutory regulations. They relate principally to the design, selection, erection, inspection and testing of electrical installations, whether permanent or temporary, in and about buildings generally and to agricultural and horticultural premises, construction sites and caravans and their sites. Paragraph 7 of the introduction to the EWR says: 'BS 7671 is a code of practice which is widely recognized and accepted in the United Kingdom and compliance with it is likely to achieve compliance with all relevant aspects of the Electricity At Work Regulations'. Although the IEE Wiring Regulations are non-statutory, they may be used in a Court of Law to claim compliance with a statutory requirement (IEE Regulation 114). The IEE Wiring Regulations only apply to installations operating at a voltage up to 1000 V a.c.

That is electrical installations in:

- domestic dwellings
- commercial buildings
- industrial situations
- agricultural and horticultural situations
- caravans and caravan parks
- construction sites and other temporary situations.

They do not apply to electrical installations in mines and quarries where special regulations apply because of the adverse conditions experienced there.

The current edition of the IEE Wiring Regulations is the 17th edition which became law in 2008. The main reason for incorporating the IEE Wiring Regulations into British Standard BS 7671 was to create harmonization with European Standards.

Specific sections within the IEE Wiring Regulations have an impact on all aspects of electrical safety in buildings, for example:

- selection and erection of equipment – Part 5
- isolation and switching – Chapter 53
- inspection and testing – Part 6
- protection against fire and thermal effects – Chapter 42
- protection against electric shock – Chapter 41
- protection against overcurrent – Chapter 43
- special installations or locations – Part 7.

To assist electricians in their understanding of the regulations, a number of guidance notes have been published. The guidance notes to which I will frequently make reference in this book are those contained in the *On Site Guide*. Eight other guidance note booklets are also currently available. These are:

- *Selection and Erection*
- *Isolation and Switching*
- *Inspection and Testing*

- *Protection against Fire*
- *Protection against Electric Shock*
- *Protection against Overcurrent*
- *Special Locations*
- *Earthing and Bonding*

The IEE *On Site Guide* is prepared by the Institution of Electrical Engineers to simplify some aspects of the IEE Wiring Regulations.

The guide is intended to be used by skilled persons (electricians) carrying out limited applications of BS 7671 in:

a. domestic installations generally, including off-peak supplies and supplies to associated garages, outbuildings and the like;
b. industrial and commercial single- and three-phase installations where the local distribution fuse board or consumer unit is located at or near the supplier's cut-out.

These guidance notes are intended to be read in conjunction with the regulations.

The IEE Wiring Regulations are the electrician's bible and provide an authoritative framework for all the work activities which we undertake as electricians.

Health and safety risks, precautions and procedures

In Chapter 1 of this book, we looked at some of the health and safety rules and regulations. In particular, we now know that the Health and Safety at Work Act is the most important piece of recent legislation, because it places responsibilities for safety at work on both employers and employees. This responsibility is enforceable by law. We know what the regulations say about the control of substances which might be hazardous to our health at work, because we briefly looked at the COSHH Regulations 2002 in Chapter 1. We also know that if there is a risk to health and safety at work, our employer must provide personal protective equipment (PPE) free of charge, for us to use so that we are safe at work. The law is in place, we all apply the principles of health and safety at work and we always wear the appropriate PPE, so what are the risks? Well, getting injured at work is not a pleasant subject to think about but each year about 300 people in Great Britain lose their lives at work. In addition, there are about 158,000 non-fatal injuries reported to the Health and Safety Executive (HSE) each year and an estimated 2.2 million people suffer ill health caused by, or made worse by, work. It is a mistake to believe that these things only happen in dangerous occupations such as deep-sea diving, mining and quarrying, the fishing industry, tunnelling and fire fighting or that it only happens in exceptional circumstances which would never happen in your workplace. This is not the case. Some basic thinking and acting beforehand could have prevented most of these accident statistics from happening.

The most common categories of risk and causes of accidents at work are:

- slips, trips and falls
- manual handling; that is moving objects by hand
- using equipment, machinery or tools
- storage of goods and materials which then become unstable
- fire
- electricity
- mechanical handling.

Precautions taken to control risks:

- eliminate the cause
- substitute a procedure or product with less risk
- enclose the dangerous situation
- put guards around the hazard
- use safe systems of work
- supervise, train and give information to staff
- if the hazard cannot be removed or minimized then provide PPE.

Let us now look at the application of some of the procedures that make the workplace a safer place to work, but first I want to explain what I mean when I use the words hazard and risk.

Definition

A ***hazard*** is something with the 'potential' to cause harm; for example, chemicals, electricity or working above ground.

A ***risk*** is the 'likelihood' of harm actually being done.

Hazard and risk

A **hazard** is something with the 'potential' to cause harm; for example, chemicals, electricity or working above ground.

A **risk** is the 'likelihood' of harm actually being done.

Competent persons are often referred to in the Health and Safety at Work Act, but who is 'competent'? For the purposes of the Act, a competent person is anyone who has the necessary technical skills, training and expertise to safely carry out the particular activity. Therefore, a competent person dealing with a hazardous situation reduces the risk.

Definition

A ***competent person*** is anyone who has the necessary technical skills, training and expertise to safely carry out the particular activity.

Think about your workplace and at each stage of what you do, think about what might go wrong. Some simple activities may be hazardous. Here are some typical activities where accidents might happen:

Typical activity	Potential hazard
Receiving materials	Lifting and carrying
Stacking and storing	Falling materials
Movement of people	Slips, trips and falls
Building maintenance	Working at heights or in confined spaces
Movement of vehicles	Collisions

How high are the risks? Think about what might be the worst result; is it a broken finger or someone suffering permanent lung damage or being killed? How likely is it to happen? How often is that type of work carried out and how close do people get to the hazard? How likely is it that something will go wrong?

How many people might be injured if things go wrong? Might this also include people who do not work for your company?

Employers of more than five people must document the risks at work and the process is known as **hazard risk assessment**.

Definition

Employers of more than five people must document the risks at work and the process is known as ***hazard risk assessment***.

Hazard risk assessment: the procedure

The Management of Health and Safety at Work Regulations 1999 tell us that employers must systematically examine the workplace, the work activity and the management of safety in the establishment through a process of risk assessments. A record of all significant risk assessment findings must be kept in

a safe place and be made available to an HSE inspector if required. Information based on the risk assessment findings must be communicated to relevant staff and if changes in work behaviour patterns are recommended in the interests of safety, then they must be put in place.

So risk assessment must form a part of any employer's robust policy of health and safety. However, an employer only needs to 'formally' assess the significant risks. He is not expected to assess the trivial and minor types of household risks. Staff are expected to read and to act upon these formal risk assessments, and they are unlikely to do so enthusiastically if the file is full of trivia. An assessment of risk is nothing more than a careful examination of what, in your work, could cause harm to people. It is a record that shows whether sufficient precautions have been taken to prevent harm.

The HSE recommends five steps to any risk assessment.

Step 1

Look at what might reasonably be expected to cause harm. Ignore the trivial and concentrate only on significant hazards that could result in serious harm or injury. Manufacturers' data sheets or instructions can also help you spot hazards and put risks in their true perspective.

Step 2

Decide who might be harmed and how. Think about people who might not be in the workplace all the time – cleaners, visitors, contractors or maintenance personnel. Include members of the public or people who share the workplace. Is there a chance that they could be injured by activities taking place in the workplace?

Step 3

Evaluate what is the risk arising from an identified hazard. Is it adequately controlled or should more be done? Even after precautions have been put in place, some risk may remain. What you have to decide, for each significant hazard, is whether this remaining risk is low, medium or high. First of all, ask yourself if you have done all the things that the law says you have got to do. For example, there are legal requirements on the prevention of access to dangerous machinery. Then ask yourself whether generally accepted industry standards are in place, but do not stop there – think for yourself, because the law also says that you must do what is reasonably practicable to keep the workplace safe. Your real aim is to make all risks small, by adding precautions, if necessary.

If you find that something needs to be done, ask yourself:

- Can I get rid of this hazard altogether?
- If not, how can I control the risk so that harm is unlikely?

Only use PPE when there is nothing else that you can reasonably do.

If the work that you do varies a lot, or if there is movement between one site and another, select those hazards which you can reasonably foresee, the ones that apply to most jobs and assess the risks for them. After that, if you spot any unusual hazards when you get on site, take what action seems necessary.

Key fact

Definition

- Hazard is something that might cause harm
- Risk is the chance that harm will be done.

Step 4

Record your findings and say what you are going to do about risks that are not adequately controlled. If there are fewer than five employees you do not need

to write anything down but if there are five or more employees, the significant findings of the risk assessment must be recorded. This means writing down the more significant hazards and assessing if they are adequately controlled and recording your most important conclusions. Most employers have a standard risk assessment form which they use such as that shown in Fig. 5.8 but any format is suitable. The important thing is to make a record.

HAZARD RISK ASSESSMENT	FLASH-BANG ELECTRICAL CO.
For Company name or site: ..... Address:	Assessment undertaken by: ..... Signed: ..... Date: .....
STEP 5 Assessment review date:	
STEP 1 List the hazards here	STEP 2 Decide who might be harmed ....
STEP 3 Evaluate (what is) the risk – is it adequately controlled? State risk level as low, medium or high	STEP 4 Further action – what else is required to control any risk identified as medium or high? ....

Figure 5.8 Hazard risk assessment standard form.

There is no need to show how the assessment was made, provided you can show that:

1. a proper check was made
2. you asked those who might be affected
3. you dealt with all obvious and significant hazards
4. the precautions are reasonable and the remaining risk is low
5. you informed your employees about your findings.

Definition

Risk assessments need to be *suitable* and *sufficient*, not perfect.

Risk assessments need to be *suitable* and *sufficient*, not perfect. The two main points are:

1. Are the precautions reasonable?
2. Is there a record to show that a proper check was made?

File away the written assessment in a dedicated file for future reference or use. It can help if an HSE inspector questions the company's precautions or if the company becomes involved in any legal action. It shows that the company has done what the law requires.

Step 5

Review the assessments from time to time and revise them if necessary.

Completing a risk assessment

When completing a risk assessment such as that shown in Fig. 5.8, do not be over complicated. In most firms in the commercial, service and light industrial sector, the hazards are few and simple. Checking them is common sense but necessary.

Step 1

List only hazards which you could reasonably expect to result in significant harm under the conditions prevailing in your workplace. Use the following examples as a guide:

- Slipping or tripping hazards (e.g. from poorly maintained or partly installed floors and stairs)
- Fire (e.g. from flammable materials you might be using, such as solvents)
- Chemicals (e.g. from battery acid)
- Moving parts of machinery (e.g. blades)
- Rotating parts of hand tools (e.g. drills)
- Accidental discharge of cartridge operated tools
- High pressure air from airlines (e.g. air powered tools)
- Pressure systems (e.g. steam boilers)
- Vehicles (e.g. fork-lift trucks)
- Electricity (e.g. faulty tools and equipment)
- Dust (e.g. from grinding operations or thermal insulation)
- Fumes (e.g. from welding)
- Manual handling (e.g. lifting, moving or supporting loads)
- Noise levels too high (e.g. machinery)
- Poor lighting levels (e.g. working in temporary or enclosed spaces)
- Low temperatures (e.g. working outdoors or in refrigeration plant)
- High temperatures (e.g. working in boiler rooms or furnaces).

Step 2

Decide who might be harmed. Do not list individuals by name. Just think about groups of people doing similar work or who might be affected by your work:

- Office staff
- Electricians
- Maintenance personnel
- Other contractors on site
- Operators of equipment
- Cleaners
- Members of the public.

Pay particular attention to those who may be more vulnerable, such as:

- staff with disabilities
- visitors
- young or inexperienced staff
- people working in isolation or enclosed spaces.

Safety first

Safety Procedures

- Hazard risk assessment is *an essential part* of any health and safety management system
- The aim of the planning process is to minimize risk
- HSE Publication, HSG (65).

Step 3

Calculate what is the risk – is it adequately controlled? Have you already taken precautions to protect against the hazards which you have listed in Step 1? For example:

- have you provided adequate information to staff?
- have you provided training or instruction?

Do the precautions already taken:

- meet the legal standards required?
- comply with recognized industrial practice?
- represent good practice?
- reduce the risk as far as is reasonably practicable?

If you can answer 'yes' to the above points then the risks are adequately controlled, but you need to state the precautions you have put in place. You can refer to company procedures, company rules, company practices, etc., in giving this information. For example, if we consider there might be a risk of electric shock from using electrical power tools, then the risk of a shock will be *less* if the company policy is to portable appliance test (PAT) all power tools each year and to fit a label to the tool showing that it has been tested for electrical safety. If the stated company procedure is to use battery drills whenever possible, or 110 V drills when this is not possible, and to *never* use 230 V drills, then this again will reduce the risk. If a policy such as this is written down in the company Safety Policy Statement, then you can simply refer to the appropriate section of the Safety Policy Statement and the level of risk will be low.

Step 4

Further action – what more could be done to reduce those risks which were found to be inadequately controlled?

You will need to give priority to those risks that affect large numbers of people or which could result in serious harm. Senior managers should apply the principles below when taking action, if possible in the following order:

1. Remove the risk completely
2. Try a less risky option

3 Prevent access to the hazard (e.g. by guarding)
4 Organize work differently in order to reduce exposure to the hazard
5 Issue PPE
6 Provide welfare facilities (e.g. washing facilities for removal of contamination and first aid).

Any hazard identified by a risk assessment as *high risk* must be brought to the attention of the person responsible for health and safety within the company. Ideally, in Step 4 of the risk assessment you should be writing 'No further action is required. The risks are under control and identified as low risk'.

The assessor may use as many standard hazard risk assessment forms, such as that shown in Fig. 5.8, as the assessment requires. Upon completion they should be stapled together or placed in a plastic wallet and stored in the dedicated file.

You might like to carry out a risk assessment on a situation you are familiar with at work, using the standard form of Fig. 5.8, or your employer's standard forms.

Try to get into the habit of doing a risk assessment every time you arrive in the workplace. Not a formal written risk assessment like the one I have just described, but an informal one for yourself, assessing the potential hazards around your area of work. You can then reduce any potential hazards by appropriate safety measures which will make your working environment safer.

Safe working procedures to prevent injury

Where a particular hazard exists in the working environment, an employer must carry out a risk assessment and establish procedures which will reduce or eliminate the risk. When the risk cannot be completely removed, an employer must provide personal protective equipment (PPE) to protect his employees from a risk to health and safety.

Definition

A hazard is something with the potential to cause harm, for example, chemicals, electricity, working above ground.

Personal protective equipment

PPE is defined as all equipment designed to be worn, or held, to protect against a risk to health and safety. This includes most types of protective clothing, and equipment such as eye, foot and head protection, safety harnesses, life jackets and high-visibility clothing.

Definition

A risk is the likelihood or chance of harm actually being done by the hazard.

Under the Health and Safety at Work Act, employers must provide free of charge any PPE and employees must make full and proper use of it. Safety signs such as those shown in Fig. 5.9 are useful reminders of the type of PPE to be used in a particular area. The vulnerable parts of the body which may need protection are the head, eyes, ears, lungs, torso, hands and feet and, additionally, protection from falls may need to be considered. Objects falling from a height present the major hazard against which head protection is provided. Other hazards include striking the head against projections and hair becoming entangled in machinery. Typical methods of protection include helmets, light duty scalp protectors called 'bump caps' and hair-nets.

Definition

PPE is defined as all equipment designed to be worn, or held, to protect against a risk to health and safety.

The eyes are very vulnerable to liquid splashes, flying particles and light emissions such as ultraviolet light, electric arcs and lasers. Types of eye protectors include safety spectacles, safety goggles and face shields. Screen based workstations are being used increasingly in industrial and commercial locations by all types of personnel. Working with VDUs (visual display units) can cause eye strain and fatigue and, therefore, every display screen operator is entitled to a free eye test.

Figure 5.9 Safety signs showing type of PPE to be worn.

Noise is accepted as a problem in most industries and we looked in some detail at the Noise Regulations a little earlier in this book under the Environmental Laws section in chapter 2.

Noise may be defined as any disagreeable or undesirable sound or sounds, generally of a random nature, which do not have clearly defined frequencies. The usual basis for measuring noise or sound level is the decibel scale. Whether noise of a particular level is harmful or not also depends upon the length of exposure to it. This is the basis of the widely accepted limit of 85 dB of continuous exposure to noise for 8 hours per day.

Where individuals must be subjected to some noise at work it may be reduced by ear protectors. These may be disposable ear plugs, reusable ear plugs or ear muffs. The chosen ear protector must be suited to the user and suitable for the type of noise and individual personnel should be trained in its correct use.

Breathing reasonably clean air is the right of every individual, particularly at work. Some industrial processes produce dust which may present a potentially serious hazard. The lung disease asbestosis, caused by the inhalation of asbestos dust or particles, and the coal dust disease pneumoconiosis, suffered by many coal miners, have made people aware of the dangers of breathing in contaminated air.

Some people may prove to be allergic to quite innocent products, such as flour dust in the food industry or wood dust in the construction industry. The main effect of inhaling dust is a measurable impairment of lung function. This can be avoided by wearing an appropriate mask, respirator or breathing apparatus as recommended by the company's health and safety policy and indicated by local safety signs such as those shown in Fig. 5.10.

A worker's body may need protection against heat or cold, bad weather, chemical or metal splash, impact or penetration and contaminated dust. Alternatively, there may be a risk of the worker's own clothes causing contamination of the product, as in the food industry. Appropriate clothing will be recommended in the company's

(a) (b)

Figure 5.10 Breathing protection signs.

health and safety policy. Ordinary working clothes and clothing provided for food hygiene purposes are not included in the PPE at Work Regulations.

Hands and feet may need protection from abrasion, temperature extremes, cuts and punctures, impact or skin infection. Gloves or gauntlets provide protection from most industrial processes but should not be worn when operating machinery because they may become entangled in it. Care in selecting the appropriate protective device is required; for example, barrier creams provide only a limited protection against infection.

Boots or shoes with in-built toe caps can give protection against impact or falling objects and, when fitted with a mild steel sole plate, can also provide protection from sharp objects penetrating through the sole. Special slip resistant soles can also be provided for employees working in wet areas.

Whatever the hazard to health and safety at work, the employer must be able to demonstrate that he or she has carried out a risk assessment, made recommendations which will reduce that risk and communicated these recommendations to the workforce. Where there is a need for PPE to protect against personal injury and to create a safe working environment, the employer must provide that equipment and any necessary training which might be required and the employee must make full and proper use of such equipment and training.

Working alone

Some working situations are so potentially hazardous that not only must PPE be worn but you must also never work alone and safe working procedures must be in place before your work begins to reduce the risk.

It is unsafe to work in isolation in the following situations:

- when working above ground,
- when working below ground,
- when working in confined spaces,
- when working close to unguarded machinery,
- when a fire risk exists,
- when working close to toxic or corrosive substances.

Safety first

Working alone

- Never work alone in:
  - confined spaces
  - storage tanks
  - enclosed ductwork.

Working above ground

We looked at this topic as it applies to electrotechnical personnel in Chapter 1 under the sub-heading ‘Safe Working above Ground’.

The Work at Height Regulations 2005 tell us that a person is at height if that person could be injured by falling from it. The regulations require that:

- We should avoid working at height if at all possible.
- No work should be done at height which can be done on the ground. For example, equipment can be assembled on the ground then taken up to height, perhaps for fixing.

- Ensure the work at height is properly planned.
- Take account of any risk assessments carried out under Regulation 3 of the Management of Health and Safety at Work Regulations.

Working below ground

Working below ground might be working in a cellar or an unventilated basement with only one entrance/exit. There is a risk that this entrance/exit might become blocked by materials, fumes or fire. When working in trenches there is always the risk of the sides collapsing if they are not adequately supported by temporary steel sheets. There is also the risk of falling objects, so always:

- wear a hard hat,
- never go into an unsupported excavation,
- erect barriers around the excavation,
- provide good ladder access,
- ensure the work is properly planned,
- take account of the risk assessment before starting work.

Working in confined spaces

When working in confined spaces there is always the risk that you may become trapped or overcome by a lack of oxygen or by gas, fumes, heat or an accumulation of dust. Examples of confined spaces are:

- storage tanks and silos on farms,
- enclosed sewer and pumping stations,
- furnaces,
- ductwork.

In my experience, electricians spend a lot of time on their knees in confined spaces because many electrical cable systems run out of sight away from public areas of a building.

The Confined Spaces Regulations 1997 require that:

- A risk assessment is carried out before work commences.
- If there is a serious risk of injury in entering the confined space, then the work should be done on the outside of the vessel.
- Follow a safe working procedure such as a ‘permit-to-work procedure’ (which is discussed later in this chapter), and put adequate emergency arrangements in place before work commences.

Working near unguarded machinery

There is an obvious risk in working close to unguarded machinery and, indeed, most machinery will be guarded but in some production processes and with overhead travelling cranes, this is not always possible. To reduce the risks associated with these hazards:

- have the machinery stopped during your work activity if possible,
- put temporary barriers in place,
- make sure that the machine operator knows that you are working on the equipment,
- identify the location of emergency stop buttons,
- take account of the risk assessment before work commences.

A risk of fire

When working in locations containing stored flammable materials such as petrol, paraffin, diesel or bottled gas, there is always the risk of fire. To minimize the risk:

- take account of the risk assessment before work commences,
- keep the area well ventilated,
- locate the fire extinguishers,
- secure your exit from the area,
- locate the nearest fire alarm point,
- follow a safe working procedure and put adequate emergency arrangements in place before work commences.

Evacuation procedures

When the fire alarm sounds you must leave the building immediately by any one of the escape routes indicated. **Exit routes** are usually indicated by a green and white 'running man' symbol. Evacuation should be orderly; do not run but walk purposefully to your designated assembly point.

The purpose of an **assembly point** is to get you away from danger to a place of safety where you will not be in the way of the emergency services. It also allows for people to be accounted for and to make sure that no one is left in the building. You must not re-enter the building until a person in authority gives permission to do so.

An evacuation in a real emergency can be a frightening experience, especially if you do not really know what to do, so take time to familiarize yourself with the fire safety procedures where you are working before an emergency occurs.

Definition

Exit routes are usually indicated by a green and white 'running man' symbol. Evacuation should be orderly; do not run but walk purposefully to your designated assembly point.

Secure electrical isolation

Electric shock occurs when a person becomes part of the electrical circuit. The level or intensity of the shock will depend upon many factors, such as age, fitness and the circumstances in which the shock is received. The lethal level is approximately 50 mA, above which muscles contract, the heart flutters and breathing stops. A shock above the 50 mA level is therefore fatal unless the person is quickly separated from the supply. Below 50 mA only an unpleasant tingling sensation may be experienced or you may be thrown across a room or shocked enough to fall from a roof or ladder, but the resulting fall may lead to serious injury.

To prevent people receiving an electric shock accidentally, all circuits contain protective devices. All exposed metal is earthed, fuses and miniature circuit breakers (MCBs) are designed to trip under fault conditions and residual current devices (RCDs) are designed to trip below the fatal level.

Construction workers and particularly electricians do receive electric shocks, usually as a result of carelessness or unforeseen circumstances. As an electrician working on electrical equipment you must always make sure that the equipment is switched off or electrically isolated before commencing work. Every circuit must be provided with a means of isolation (IEE Regulation 132.15). When working on portable equipment or desktop units it is often simply a matter of unplugging the equipment from the adjacent supply. Larger pieces of equipment and electrical machines may require isolating at the local isolator

Definition

The purpose of an *assembly point* is to get you away from danger to a place of safety where you will not be in the way of the emergency services.

Figure 5.11 Typical voltage indicator.

Definition

Electrical isolation: We must ensure the disconnection and separation of electrical equipment from every source of supply and that this disconnection and separation is secure.

switch before work commences. To deter anyone from reconnecting the supply while work is being carried out on equipment, a sign 'Danger – Electrician at Work' should be displayed on the isolator and the isolation 'secured' with a small padlock or the fuses removed so that no one can reconnect whilst work is being carried out on that piece of equipment. The Electricity at Work Regulations 1989 are very specific at Regulation 12(1) that we must ensure the disconnection and separation of electrical equipment from every source of supply and that this disconnection and separation is secure. Where a test instrument or voltage indicator is used to prove the supply dead, Regulation 4(3) of the Electricity at Work Regulations 1989 recommends that the following procedure is adopted:

1. First connect the test device, such as that shown in Fig. 5.11, to the supply which is to be isolated. The test device should indicate mains voltage.
2. Next, isolate the supply and observe that the test device now reads zero volts.
3. Then connect the same test device to a known live supply or proving unit, such as that shown in Fig. 5.12, to 'prove' that the tester is still working correctly.
4. Finally secure the isolation and place warning signs; only then should work commence.

The test device being used by the electrician must incorporate safe test leads which comply with the Health and Safety Executive (HSE) Guidance Note 38 on electrical test equipment. These leads should incorporate barriers to prevent the user touching live terminals when testing and incorporate a protective fuse and be well insulated and robust, such as those shown in Fig. 5.13.

To isolate a piece of equipment or individual circuit successfully, competently, safely and in accordance with all the relevant regulations, we must follow a procedure such as that given by the flow diagram in Fig. 5.14. Start at the top and work down the flow diagram. When the heavy outlined amber boxes are reached, pause and ask yourself whether everything is satisfactory up to this point. If the answer is 'yes', move on. If the answer is 'no', go back as indicated by the diagram.

Safety first

Isolation

Never carry out live repair work.

- First – test to verify circuit is 'alive'.
- Second – isolate the supply.
- Third – test to verify circuit is 'dead'.
- Fourth – secure the isolation.
- Fifth – test the tester.

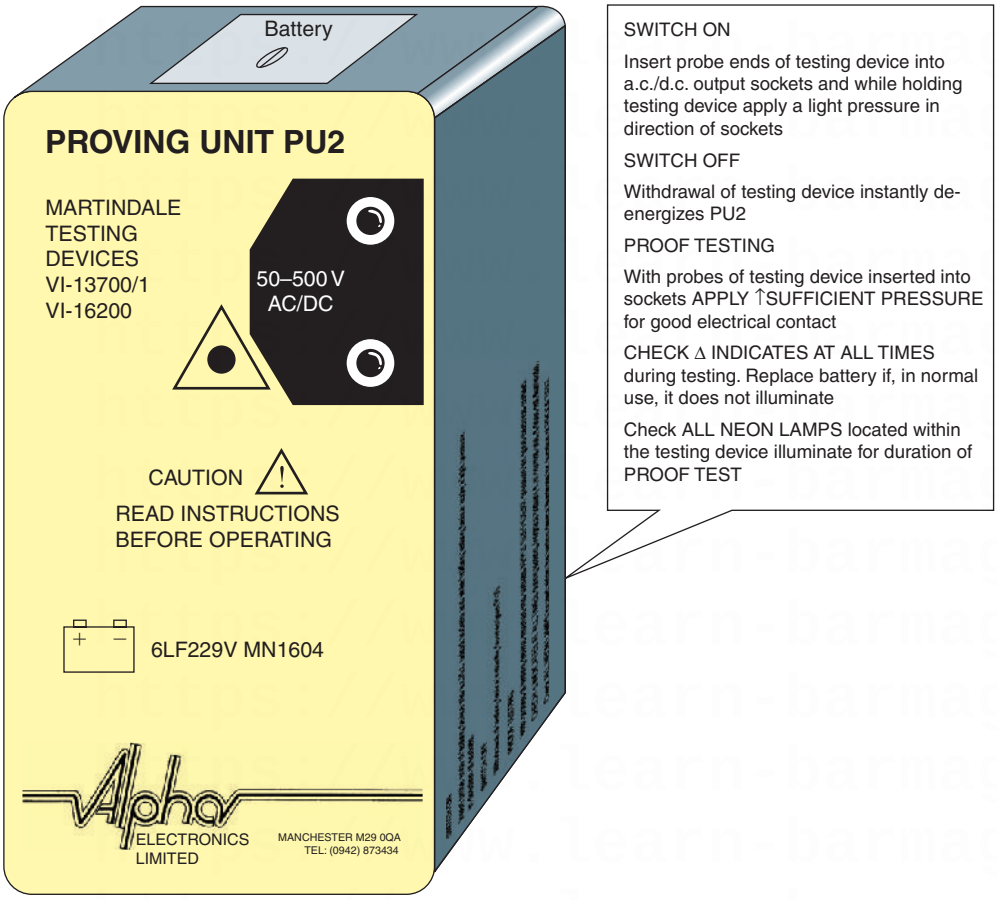

Figure 5.12 Voltage proving unit.

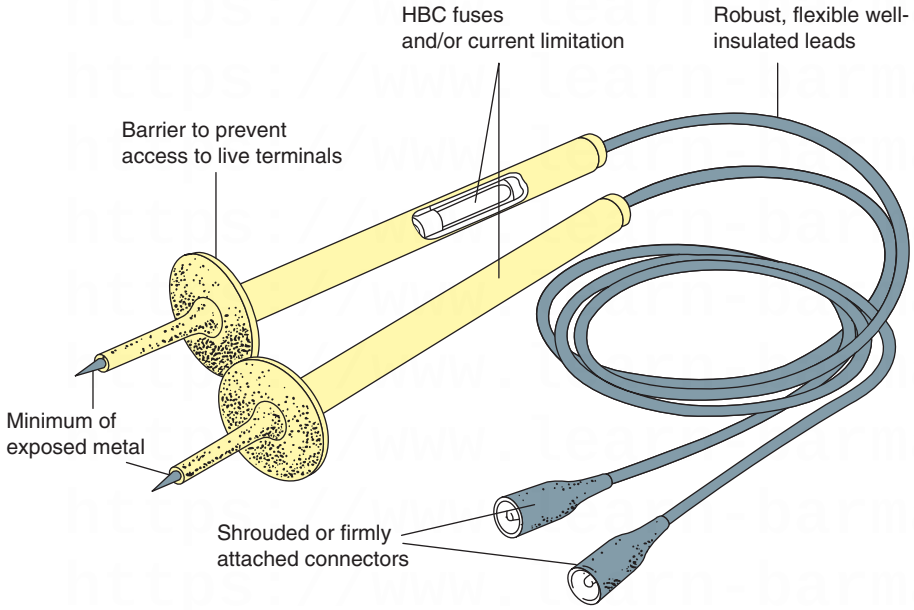

Figure 5.13 Recommended type of test probe and leads.

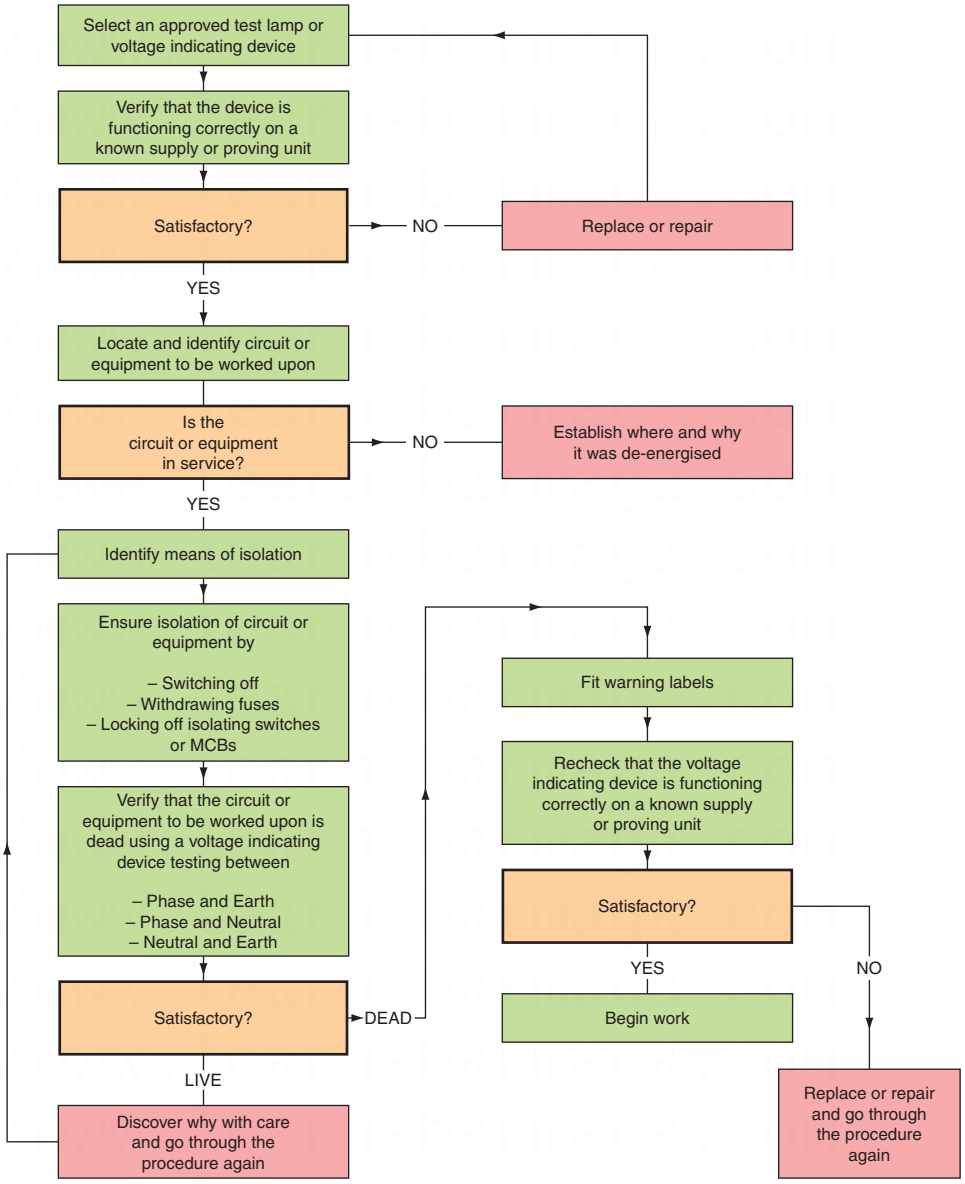

Figure 5.14 Flowchart for a secure isolation procedure.

Live testing

The Electricity at Work Regulations 1989 at Regulation 4(3) tell us that it is preferable that supplies be made dead before work commences. However, it does acknowledge that some work, such as fault finding and testing, may require the electrical equipment to remain energized. Therefore, if the fault finding and testing can only be successfully carried out live then the person carrying out the fault diagnosis must:

- be trained so that they understand the equipment and the potential hazards of working live and can, therefore, be deemed 'competent' to carry out that activity;
- only use approved test equipment;
- set up appropriate warning notices and barriers so that the work activity does not create a situation dangerous to others.

While live testing may be required by workers in the electrotechnical industries in order to find the fault, live repair work must not be carried out. The individual

circuit or piece of equipment must first be isolated before work commences in order to comply with the Electricity at Work Regulations 1989.

Permit-to-work system

The **permit-to-work procedure** is a type of 'safe system to work' procedure used in specialized and potentially dangerous plant process situations. The procedure was developed for the chemical industry, but the principle is equally applicable to the management of complex risk in other industries or situations. For example:

- Working on part of an assembly line process where goods move through a complex, continuous process from one machine to another (e.g. the food industry).
- Repairs to railway tracks, tippers and conveyors.
- Working in confined spaces (e.g. vats and storage containers).
- Working on or near overhead crane tracks.
- Working underground or in deep trenches.
- Working on pipelines.
- Working near live equipment or unguarded machinery.
- Roof work.
- Working in hazardous atmospheres (e.g. the petroleum industry).
- Working near or with corrosive or toxic substances.

All the above situations are high-risk working situations that should be avoided unless you have received special training and will probably require the completion of a permit-to-work. Permits-to-work must adhere to the following eight principles:

1. Wherever possible the hazard should be eliminated so that the work can be done safely without a permit-to-work.
2. The Site Manager has overall responsibility for the permit-to-work even though he may delegate the responsibility for its issue.
3. The permit must be recognized as the master instruction, which, until it is cancelled, overrides all other instructions.
4. The permit applies to everyone on site, other trades and sub-contractors.
5. The permit must give detailed information; for example: (i) which piece of plant has been isolated and the steps by which this has been achieved (ii) what work is to be carried out (iii) the time at which the permit comes into effect.
6. The permit remains in force until the work is completed and is cancelled by the person who issued it.
7. No other work is authorized. If the planned work must be changed, the existing permit must be cancelled and a new one issued.
8. Responsibility for the plant must be clearly defined at all stages because the equipment that is taken out of service is released to those who are to carry out the work.

The people doing the work, the people to whom the permit is given, take on the responsibility of following and maintaining the safeguards set out in the permit, which will define what is to be done (no other work is permitted) and the time scale in which it is to be carried out.

The permit-to-work system must help communication between everyone involved in the process or type of work. Employers must train staff in the use of such permits and, ideally, training should be designed by the company issuing

Definition

The *permit-to-work procedure* is a type of 'safe system to work' procedure used in specialized and potentially dangerous plant process situations.

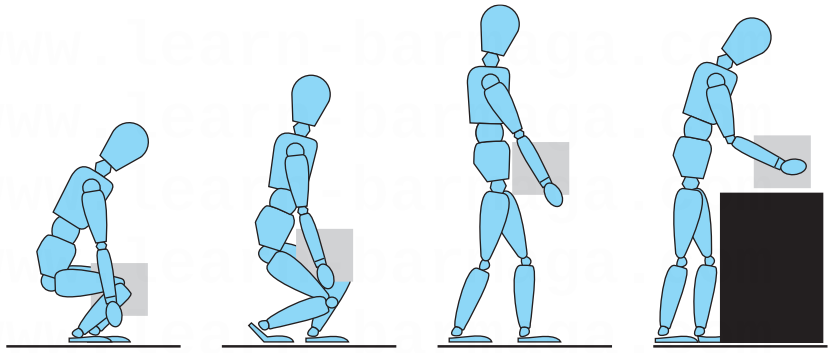

Figure 5.15 Correct manual lifting and carrying procedure.

the permit, so that sufficient emphasis can be given to particular hazards present and the precautions which will be required to be taken. For further details see Permit to Work @ www.hse.gov.uk.

Safe manual handling

Definition

Manual handling is lifting, transporting or supporting loads by hand or by bodily force.

Manual handling is lifting, transporting or supporting loads by hand or by bodily force. The load might be any heavy object, a printer, a VDU, a box of tools or a stepladder. Whatever the heavy object is, it must be moved thoughtfully and carefully, using appropriate lifting techniques if personal pain and injury are to be avoided. **Many people hurt their back, arms and feet, and over one third of all 3 day reported injuries submitted to the HSE each year are the result of manual handling**.

When lifting heavy loads, correct lifting procedures must be adopted to avoid back injuries. Figure 5.15 demonstrates the technique. Do not lift objects from the floor with the back bent and the legs straight as this causes excessive stress on the spine. Always lift with the back straight and the legs bent so that the powerful leg muscles do the lifting work. Bend at the hips and knees to get down to the level of the object being lifted, positioning the body as close to the object as possible. Grasp the object firmly and, keeping the back straight and the head erect, use the leg muscles to raise in a smooth movement. Carry the load close to the body. When putting the object down, keep the back straight and bend at the hips and knees, reversing the lifting procedure. A bad lifting technique will result in sprains, strains and pains. **There have been too many injuries over the years resulting from bad manual handling techniques. The problem has become so serious that the HSE introduced legislation** under the Health and Safety at Work Act 1974, the Manual Handling Operations Regulations 1992. Publications such as *Getting to Grips with Manual Handling* can be obtained from HSE Books; the address and Infoline are given in the Appendix.

Where a job involves considerable manual handling, employers must now train employees in the correct lifting procedures and provide the appropriate equipment necessary to promote the safe manual handling of loads.

Consider some ‘good practice’ when lifting loads:

- Do not lift the load manually if it is more appropriate to use a mechanical aid. Only lift or carry what you can easily manage.
- Always use a trolley, such as that shown in Fig. 5.16: wheelbarrow or truck when these are available.

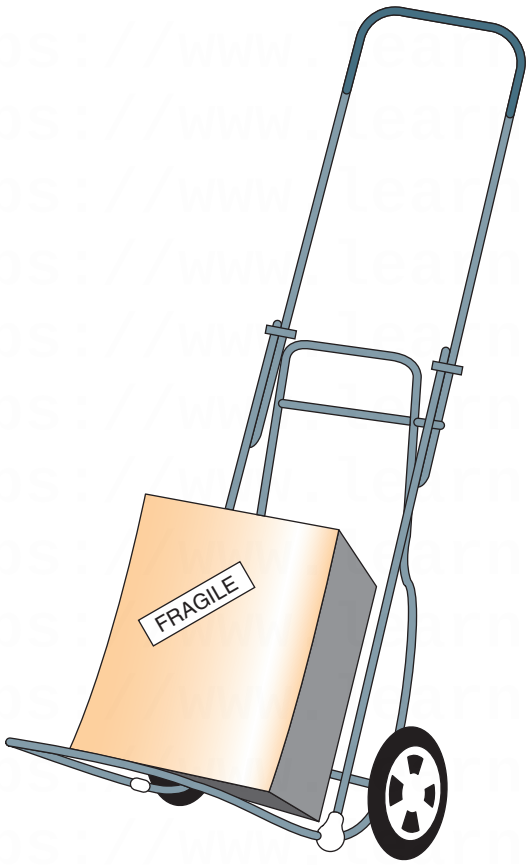

Figure 5.16 Always use a mechanical aid to transport a load when available.

- Plan ahead to avoid unnecessary or repeated movement of loads.
- Take account of the centre of gravity of the load when lifting – the weight acts through the centre of gravity.
- Never leave a suspended load unsupervised.
- Always lift and lower loads gently.
- Clear obstacles out of the lifting area.
- Use the manual lifting techniques described above and avoid sudden or jerky movements.
- Use gloves when manual handling to avoid injury from rough or sharp edges.
- Take special care when moving loads wrapped in grease or bubble-wrap.
- Never move a load over other people or walk under a suspended load.

Safety first

Lifting

- bend your legs when lifting from the floor
- keep your back straight
- use leg muscles to raise the weight in a smooth movement.

Hand tools and power tools

A craftsman earns his living by hiring out his skills or selling products made using his skills and expertise. He shapes his environment, mostly for the better, improving the living standards of himself and others.

Tools extend the limited physical responses of the human body and therefore good quality, sharp tools are important to a craftsman. An electrician is no less a craftsman than a wood carver. Both must work with a high degree of skill and expertise and both must have sympathy and respect for the materials which they use. Modern electrical installations using new materials are lasting longer than 50 years. Therefore they must be properly installed. Good design,

Figure 5.17 The tools used for making electrical connections.

Figure 5.18 Some additional tools required by an electrician engaged in house wiring.

good workmanship by competent persons and the use of proper materials are essential if the installation is to comply with the relevant regulations, (IEE Regulation 134.1.1) and reliably and safely meet the requirements of the customer for over half a century.

An electrician must develop a number of basic craft skills particular to his own trade, but he also requires some of the skills used in many other trades. An electrician's toolkit will reflect both the specific and general nature of the work.

The basic tools required by an electrician are those used in the stripping and connecting of conductors.

These are pliers, side cutters, a knife and an assortment of screwdrivers, as shown in Fig. 5.17.

The tools required in addition to these basic implements will depend upon the type of installation work being undertaken. When wiring new houses or rewiring old ones, the additional tools required are those usually associated with a bricklayer and joiner. Examples are shown in Fig. 5.18.

Safety first

Hand Tools
- keep them clean
- keep them sharp
- keep them safe.

Figure 5.19 Some additional tools required by an electrician engaged in industrial installations.

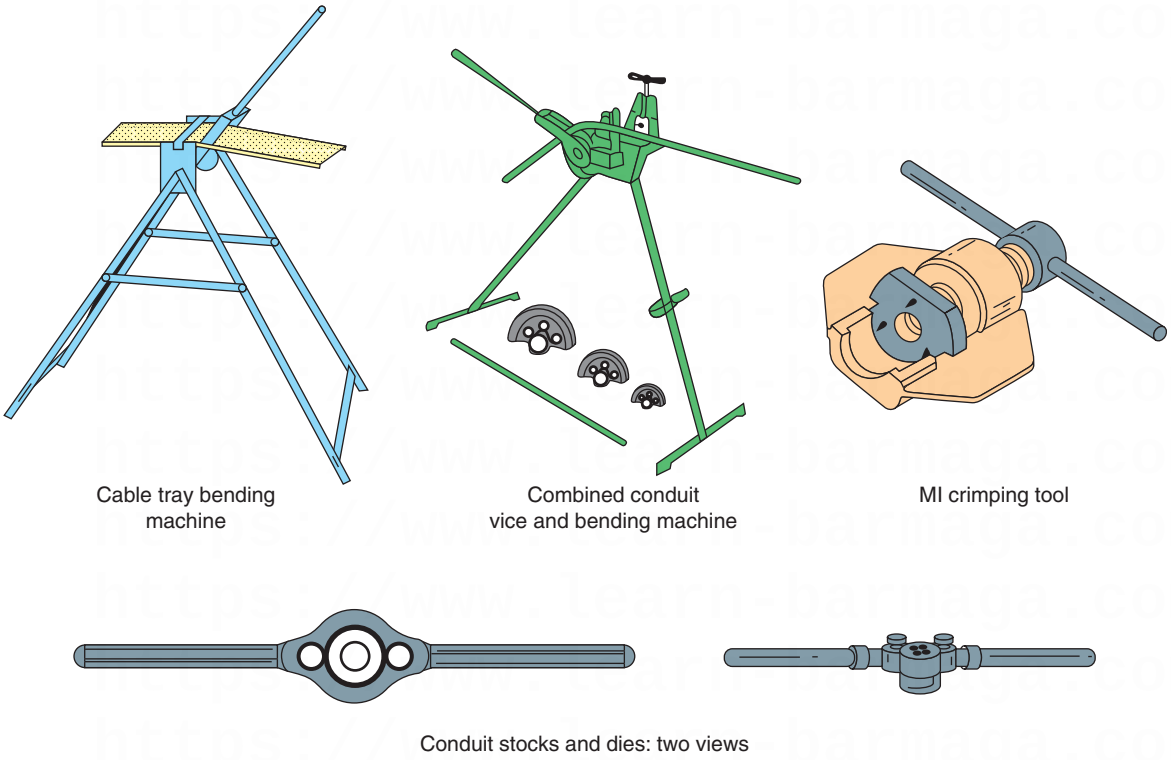

Figure 5.20 Some special tools required by an electrician engaged in industrial installations.

When working on industrial installations, installing conduit and trunking, the additional tools required by an electrician would more normally be those associated with a fitter or sheet-metal fabricator, and examples are shown in Fig. 5.19.

Where special tools are required, for example those required to terminate mineral insulated (MI) cables or the bending and cutting tools for conduit and cable trays as shown in Fig. 5.20, they will often be provided by an employer but most hand tools are provided by the electrician himself.

In general, good-quality tools last longer and stay sharper than those of inferior quality, but tools are very expensive to buy. A good set of tools can be assembled over the training period if the basic tools are bought first and the extended toolkit acquired one tool at a time.

Another name for an installation electrician is a 'journeyman' electrician and, as the name implies, an electrician must be mobile and prepared to carry his tools from one job to another. Therefore, a good toolbox is an essential early investment, so that the right tools for the job can be easily transported.

Tools should be cared for and maintained in good condition if they are to be used efficiently and remain serviceable. Screwdrivers should have a flat squared off end and wood chisels should be very sharp. Access to a grindstone will help an electrician to maintain his tools in first-class condition. Additionally, wood chisels will require sharpening on an oilstone to give them a very sharp edge.

Electrical power tools

Portable electrical tools can reduce much of the hard work for any tradesman and increase his productivity. Electrical tools should be maintained in a good condition and be appropriate for the purpose for which they are used. Many construction sites now insist on low voltage or battery tools being used which can further increase safety without any loss of productivity. Some useful electrical tools are shown in Fig. 5.21.

Electric drills are probably used most frequently of all electrical tools. They may be used to drill metal or wood. Wire brushes are made which fit into the drill chuck for cleaning the metal. Variable-speed electric drills, which incorporate a vibrator, will also drill brick and concrete as easily as wood when fitted with a masonry drill bit.

Hammer drills give between two and three thousand impacts per minute and are used for drilling concrete walls and floors.

Cordless electric drills are also available which incorporate a rechargeable battery, usually in the handle. They offer the convenience of electric drilling when an electrical supply is not available or if an extension cable is impractical.

Figure 5.21 Electrical hand tools.

Angle grinders are useful for cutting chases in brick or concrete. The discs are interchangeable. Silicon carbide discs are suitable for cutting slate, marble, tiles, brick and concrete, and aluminium oxide discs for cutting iron and steel such as conduit and trucking.

Jigsaws can be fitted with wood or metal cutting blades. With a wood cutting blade fitted they are useful for cutting across floorboards and skirting boards or any other application where a padsaw would be used. With a metal cutting blade fitted, they may be used to cut trunking.

When a lot of trunking work is to be undertaken, an electric nibbler is a worthwhile investment. This nibbles out the sheet metal, is easily controllable and is one alternative to the jigsaw.

All tools must be used safely and sensibly. Cutting tools should be sharpened and screwdrivers ground to a sharp square end on a grindstone.

It is particularly important to check that the plug top and cables of handheld electrically powered tools and extension leads are in good condition. Damaged plug tops and cables must be repaired before you use them. All electrical power tools of 110 V and 230 V must be inspected and tested with a portable appliance tester (PAT) in accordance with the company's procedures, but probably at least once each year. PAT testing tests the quality of the insulation resistance and the earth continuity. Inspection checks the condition of the plug top, fuse and lead.

Tools and equipment that are left lying about in the workplace can become damaged or stolen and may also be the cause of people slipping, tripping or falling. Tidy up regularly and put power tools back in their boxes. You personally may have no control over the condition of the workplace in general, but keeping your own work area clean and tidy is the mark of a skilled and conscientious craftsman.

Safety first

Power Tools

Many construction sites now only allow

- Low voltage tools
- PAT tested tools
- battery powered tools.

Safety first

Site Safety

The Health and Safety at Work Act makes *you* responsible for

- following the site safety rules
- demonstrating safe working practice
- Wearing or using appropriate PPE.

Try this

Power Tools

- Look at the power tools at work
- do they have a PAT Test label?
- Is it 'in date'?

Safe working practice

Every year thousands of people have accidents at their place of work despite the legal requirements laid down by the Health and Safety Executive. Many people recover quickly but an accident at work can result in permanent harm or even death.

At the very least, injuries hurt individuals. They may prevent you from doing the things you enjoy in your spare-time and they cost a lot of money, to you in loss of earnings and to your employer in loss of production and possibly damage to equipment. Your place of work may look harmless but it can be dangerous.

If there are five or more people employed by your company then the company must have its own safety policy as described in Chapter 1. This must spell out the organization and arrangements which have been put in place to ensure that you and your workmates are working in a safe place.

Your employer must also have carried out an assessment on the risks to your health and safety in the place where you are working. You should be told about

the safety policy and risk assessment; for example, you may have been given a relevant leaflet when you started work. Risk assessment was disscussed in some detail earlier in this chapter.

You have a responsibility under the Health and Safety at Work Act to:

- learn how to work safely and to follow company procedures of work;
- obey all safety rules, notices and signs;
- not interfere with or misuse anything provided for safety;
- report anything that seems damaged, faulty or dangerous;
- behave sensibly, not play practical jokes and not distract other people at work;
- walk sensibly and not run around the workplace;
- use the prescribed walkways;
- drive only those vehicles for which you have been properly trained and passed the necessary test;
- not wear jewellery which could become caught in moving parts if you are using machinery at work;
- always wear appropriate clothing and PPE if necessary.

Common causes of accidents at work

Slips, trips and falls are still the major causes of accidents at work. To help prevent them:

- keep work areas clean and tidy;
- keep walkways clear;
- do not leave objects, tools and equipment lying around blocking up walkways;
- clean up spills or wet patches on the floor straight away.

Manual handling, that is moving objects by hand, may result in strains, sprains and trap injury pains.

To help prevent them:

- use a mechanical aid to move heavy objects, such as a sack truck or flat bed truck
- only lift and carry what you can manage easily
- wear gloves to avoid rough or sharp edges
- use a good manual lifting technique as discussed earlier in this chapter.

When using equipment, machines and some tools, such as angle grinders, are difficult to use.

To help prevent injuries:

- wear goggles
- wear appropriate PPE
- make sure tools and equipment are in good condition and carry an ‘in date’ PAT test label.

Badly stored equipment can become unstable and fall on to someone. To prevent this:

- stack equipment sensibly and securely
- stack heavy objects low down
- stack objects so they can be reached without stretching or reaching over.

Fire safety was discussed earlier in this book in Chapter 1.

Electricity and its safe use is what the electrotechnical industry and the regulations are all about.

To prevent electrical accidents always use the 'safe isolation procedure' before any work begins as described in Chapter 1.

Carrying out the bullet pointed activities listed above, which help to prevent the causes of accidents, can all be considered to be 'good housekeeping' because they individually contribute to a safer work environment.

Personal hygiene

In the work environment, dirt, thermal roof insulation and contact with chemicals and cleaning fluids may make you feel ill or cause unpleasant skin complaints. Therefore, you should always:

- wear appropriate personal protective equipment;
- wash your hands after using the toilet, after work and before you eat a meal, using soap and water or appropriate cleaners;
- dry your hands with the towel or dryer provided; do not use rags or your clothes;
- use barrier creams or latex gloves when they are provided to protect your skin;
- obtain medical advice about any skin complaint such as rashes, blisters or ulcers and tell your supervisor of the problems being experienced.
- The workplace must be a safe place to work or, where particular hazards exist, they must be clearly identified and appropriate PPE provided.

Electrical cables

In Chapter 9 we will look at the science behind conductors and insulators. In this chapter, we will look at a practical application for that science, electrical cables.

Most cables can be considered to be constructed in three parts: the **conductor**, which must be of a suitable cross-section to carry the load current; the **insulation**, which has a colour or number code for identification; and the **outer sheath**, which may contain some means of providing protection from mechanical damage.

The conductors of a cable are made of either copper or aluminium and may be stranded or solid. Solid conductors are only used in fixed wiring installations and may be shaped in larger cables. Stranded conductors are more flexible and conductor sizes from 4.0 to 25 mm^2 contain seven strands. A 10 mm^2 conductor, for example, has seven 1.35 mm diameter strands which collectively make up the 10 mm^2 cross-sectional area of the cable. Conductors above 25 mm^2 have more than seven strands, depending upon the size of the cable. Flexible cords have multiple strands of very fine wire, as fine as one strand of human hair. This gives the cable its very flexible quality.

Definition

Cables can be considered to be constructed in three parts: the *conductor*, which must be of a suitable cross-section to carry the load current; the *insulation*, which has a colour or number code for identification; and the *outer sheath*, which may contain some means of providing protection from mechanical damage.

New wiring colours

Many years ago the United Kingdom agreed to adopt the European colour code for flexible cords; that is, brown for the live or phase conductor, blue for

the neutral conductor and green combined with yellow for the earth conductor. However, no similar harmonization was proposed for non-flexible cables used for fixed wiring. These were to remain as red for the live or phase conductor, black for the neutral conductor and green combined with yellow for the earth conductor.

On 31 March 2004, the IEE published Amendment No. 2 to BS 7671: 2001 which specified new cable core colours for all fixed wiring in UK electrical installations. These new core colours will 'harmonize' the United Kingdom with the practice in mainland Europe.

Fixed cable core colours up to 2006

- *Single-phase* supplies: red line conductors, black neutral conductors and green combined with yellow for earth conductors.
- *Three-Phase* supplies: red, yellow and blue line conductors, black neutral conductors and green combined with yellow for earth conductors.

These core colours must not be used after 31 March 2006.

New (harmonized) fixed cable core colours

- *Single-phase* supplies: brown line conductors, blue neutral conductors and green combined with yellow for earth conductors (just like flexible cords).
- *Three-phase* supplies: brown, black and grey line conductors, blue neutral conductors and green combined with yellow for earth conductors.

Cable core colours from 31 March 2004 onwards.

Extensions or alterations to existing *single-phase* installations do not require marking at the interface between the old and new fixed wiring colours. However, a warning notice must be fixed at the consumer unit or distribution fuse board which states:

> *Caution – this installation has wiring colours to two versions of BS 7671. Great care should be taken before undertaking extensions, alterations or repair that all conductors are correctly identified.*

Alterations to *three-phase* installations must be marked at the interface L1, L2, L3 for the lines and N for the neutral. Both new and old cables must be marked. These markings are preferred to coloured tape and a caution notice is again required at the distribution board. Appendix 7 of BS 7671: 2008 deals with harmonized cable core colours.

Safety first

PVC cables

- PVC cables should not be installed when the surrounding temperature is below 0°C.
- The PVC insulation becomes brittle at low temperatures and may be damaged during installation.
- IEE Regulation 522.1.2.

PVC insulated and sheathed cables

Domestic and commercial installations use this cable, which may be clipped direct to a surface, sunk in plaster or installed in conduit or trunking. It is the simplest and least expensive cable. Figure 5.22 shows a sketch of a twin and earth cable.

The conductors are covered with a colour-coded PVC insulation and then contained singly or with others in a PVC outer sheath.

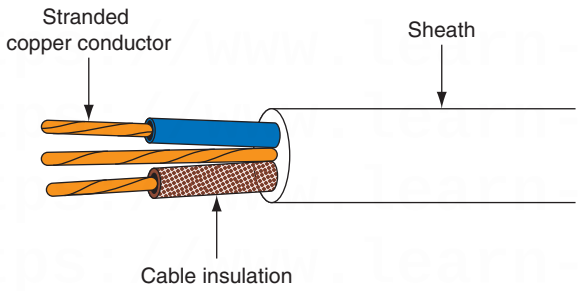

Figure 5.22 A twin and earth PVC insulated and sheathed cable.

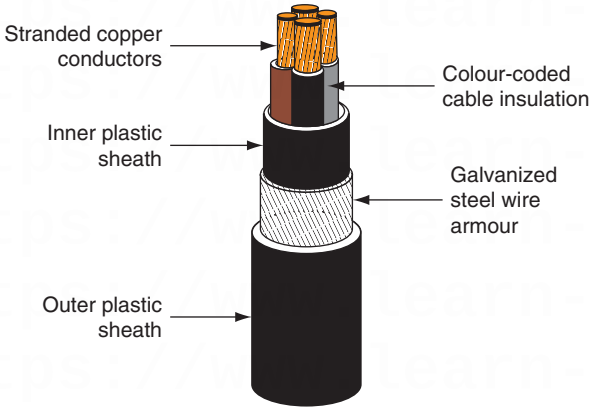

Figure 5.23 A four-core PVC/SWA cable.

PVC/SWA cable

PVC insulated steel wire armour cables are used for wiring underground between buildings, for main supplies to dwellings, rising sub-mains and industrial installations. They are used where some mechanical protection of the cable conductors is required.

The conductors are covered with colour-coded PVC insulation and then contained either singly or with others in a PVC sheath (see Fig. 5.23). Around this sheath is placed an armour protection of steel wires twisted along the length of the cable, and a final PVC sheath covering the steel wires protects them from corrosion. The armour sheath also provides the circuit protective conductor (CPC) and the cable is simply terminated using a compression gland.

MI cable

A mineral insulated (MI) cable has a seamless copper sheath which makes it waterproof and fire- and corrosion-resistant. These characteristics often make it the only cable choice for hazardous or high-temperature installations such as oil refineries and chemical works, boiler houses and furnaces, petrol pump and fire alarm installations.

The cable has a small overall diameter when compared to alternative cables and may be supplied as bare copper or with a PVC oversheath. It is colour-coded orange for general electrical wiring, white for emergency lighting or red for fire alarm wiring. The copper outer sheath provides the CPC, and the cable is terminated with a pot and sealed with compound and a compression gland (see Fig. 5.24).

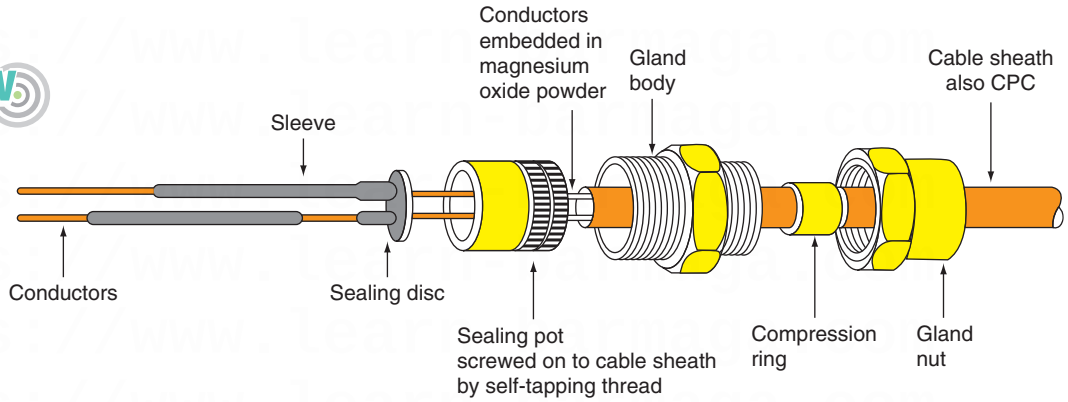

Figure 5.24 MI cable with terminating seal and gland.

The copper conductors are embedded in a white powder, magnesium oxide, which is non-ageing and non-combustible, but which is hygroscopic, which means that it readily absorbs moisture from the surrounding air unless adequately terminated. The termination of an MI cable is a complicated process requiring the electrician to demonstrate a high level of practical skill and expertise for the termination to be successful.

FP 200 cable

FP 200 cable is similar in appearance to an MI cable in that it is a circular tube, or the shape of a pencil, and is available with a red or white sheath. However, it is much simpler to use and terminate than an MI cable.

The cable is available with either solid or stranded conductors that are insulated with 'insudite' a fire resistant insulation material. The conductors are then screened by wrapping an aluminium tape around the insulated conductors, that is, between the insulated conductors and the outer sheath. This aluminium tape screen is applied metal side down and in contact with the bare CPC.

The sheath is circular and made of a robust thermoplastic low smoke, zero halogen material.

FP 200 is available in 2, 3, 4, 7, 12 and 19 cores with a conductor size range from 1.0 to 4.0 mm. The core colours are: two core, brown and blue, three core, brown, black and gray; and four core, black, red, yellow and blue.

The cable is as easy to use as a PVC insulated and sheathed cable. No special terminations are required. The cable may be terminated through a grommet into a knock out box or terminated through a simple compression gland.

The cable is a fire-resistant cable, primarily intended for use in fire alarms and emergency lighting installations or it may be embedded in plaster.

High-voltage power cables

The cables used for high-voltage power distribution require termination and installation expertise beyond the normal experience of a contracting electrician. The regulations covering high-voltage distribution are beyond the scope of the IEE regulations for electrical installations. Operating at voltages in excess of 33 kV and delivering thousands of kilowatts, these cables are either suspended out of reach on pylons or buried in the ground in carefully constructed trenches.

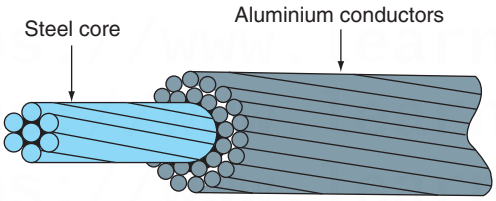

Figure 5.25 132 kV overhead cable construction.

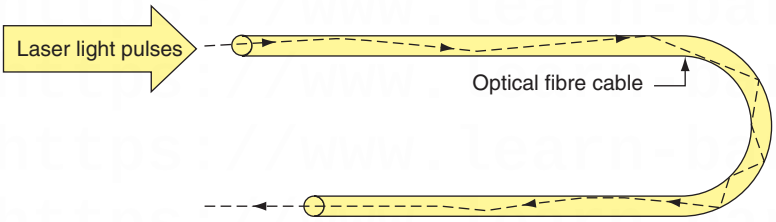

Figure 5.26 Digital pulses of laser light down an optical fibre cable.

High-voltage overhead cables

Suspended from cable towers or pylons, overhead cables must be light, flexible and strong.

The cable is constructed of stranded aluminium conductors formed around a core of steel stranded conductors (see Fig. 5.25). The aluminium conductors carry the current and the steel core provides the tensile strength required to suspend the cable between pylons. The cable is not insulated since it is placed out of reach and insulation would only add to the weight of the cable.

Optical fibre cables

The introduction of fibre-optic cable systems and digital transmissions will undoubtedly affect future cabling arrangements and the work of the electrician. Networks based on the digital technology currently being used so successfully by the telecommunications industry are very likely to become the long-term standard for computer systems. Fibre-optic systems dramatically reduce the number of cables required for control and communications systems, and this will in turn reduce the physical room required for these systems. Fibre-optic cables are also immune to electrical noise when run parallel to mains cables and, therefore, the present rules of segregation and screening may change in the future. There is no spark risk if the cable is accidentally cut and, therefore, such circuits are intrinsically safe. Intrinsic safety is described in Chapter 8 under the heading Hazardous Area Installations.

Optical fibre cables are communication cables made from optical-quality plastic, the same material from which spectacle lenses are manufactured. The energy is transferred down the cable as digital pulses of laser light as against current flowing down a copper conductor in electrical installation terms. The light pulses stay within the fibre-optic cable because of a scientific principle known as 'total internal refraction' which means that the laser light bounces down the cable and when it strikes the outer wall it is always deflected inwards and, therefore, does not escape out of the cable, as shown in Fig. 5.26.

Definition

Optical fibre cables are communication cables made from optical-quality plastic, the same material from which spectacle lenses are manufactured. The energy is transferred down the cable as digital pulses of laser light as against current flowing down a copper conductor in electrical installation terms.

The cables are very small because the optical quality of the conductor is very high and signals can be transmitted over great distances. They are cheap to produce and lightweight because these new cables are made from high-quality plastic and not high-quality copper. Single-sheathed cables are often called 'simplex' cables and twin-sheathed cables 'duplex', that is, two simplex cables together in one sheath. Multi-core cables are available containing up to 24 single fibres.

Fibre-optic cables look like steel wire armour cables (but of course are lighter) and should be installed in the same way, and given the same level of protection, as SWA cables. Avoid tight-radius bends if possible and kinks at all costs. Cables are terminated in special joint boxes which ensure cable ends are cleanly cut and butted together to ensure the continuity of the light pulses. Fibre-optic cables are Band I circuits when used for data transmission and must therefore be segregated from other mains cables to satisfy the IEE Regulations.

The testing of fibre-optic cables requires special instruments to measure the light attenuation (i.e. light loss) down the cable. Finally, when working with fibre-optic cables, electricians should avoid direct eye contact with the low-energy laser light transmitted down the conductors.

Component parts of an electrical circuit

For a piece of electrical equipment to work efficiently and effectively it must be correctly connected to an electrical circuit. So what is an electrical circuit?

An electrical circuit has the following five components as shown in Fig. 5.27:

- a source of electrical energy. This might be a battery giving a d.c. (direct current) supply or the mains supply which is a.c. (alternating current)
- a source of circuit protection. This might be a fuse or circuit breaker which will protect the circuit from 'overcurrent'
- the circuit conductors or cables. These carry voltage and current to power the load
- a means to control the circuit. This might be a simple on/off switch but it might also be a dimmer or a thermostat
- a load. This is something which needs electricity to make it work. It might be an electric lamp, an electrical appliance, an electric motor or an i-pod.

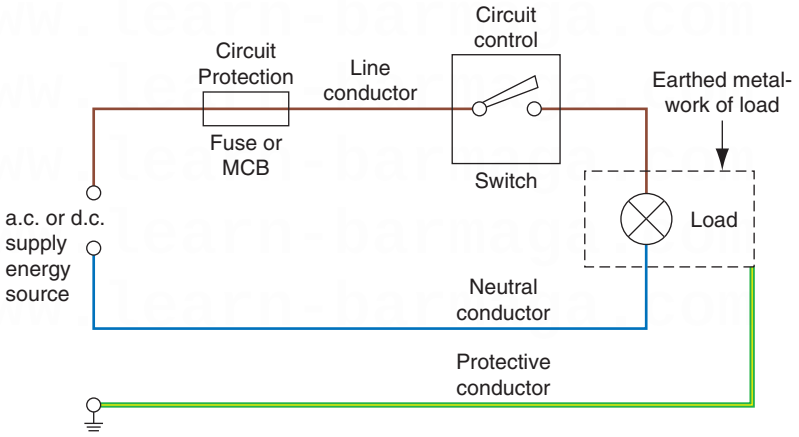

Figure 5.27 Component parts of an electrical circuit.

Choosing an appropriate wiring system

An electrical installation is made up of many different electrical circuits, lighting circuits, power circuits, single-phase domestic circuits and three-phase industrial or commercial circuits.

Whatever the type of circuit, the circuit conductors are contained within cables or enclosures.

Part 5 of the IEE Regulations tells us that electrical equipment and materials must be chosen so that they are suitable for the installed conditions, taking into account temperature, the presence of water, corrosion, mechanical damage, vibration or exposure to solar radiation. Therefore, PVC insulated and sheathed cables are suitable for domestic installations but for a cable requiring mechanical protection and suitable for burying underground, a PVC/SWA cable would be preferable. These two types of cable are shown in Figs 5.22 and 5.23 of this chapter.

MI cables are waterproof, heatproof and corrosion-resistant with some mechanical protection. These qualities often make it the only cable choice for hazardous or high-temperature installations such as oil refineries, chemical works, boiler houses and petrol pump installations. An MI cable with terminating gland and seal is shown in Fig. 5.24.

Wiring systems and enclosures

The final choice of a wiring system must rest with those designing the installation and those ordering the work, but whatever system is employed, good workmanship by competent persons and the use of proper materials is essential for compliance with the IEE Regulations (IEE Regulation 134.1.1). The necessary skills can be acquired by an electrical trainee who has the correct attitude and dedication to his craft.

PVC insulated and sheathed cable installations

PVC insulated and sheathed wiring systems are used extensively for lighting and socket installations in domestic dwellings. Mechanical damage to the cable caused by impact, abrasion, penetration, compression or tension must be minimized during installation (IEE Regulation 522.6.1). The cables are generally fixed using plastic clips incorporating a masonry nail, which means the cables can be fixed to wood, plaster or brick with almost equal ease. Cables should be run horizontally or vertically, not diagonally, down a wall. All kinks should be removed so that the cable is run straight and neatly between clips fixed at equal distances providing adequate support for the cable so that it does not become damaged by its own weight (IEE Regulation 522.8.4 and Table 4A of the *On Site Guide*). Table 4A of the *On Site Guide* is shown in Table 5.1. Where cables are bent, the radius of the bend should not cause the conductors to be damaged (IEE Regulation 522.8.3 and Table 4E of the *On Site Guide*).

Terminations or joints in the cable may be made in ceiling roses, junction boxes, or behind sockets or switches, provided that they are enclosed in a non-ignitable material, are properly insulated and are mechanically and electrically secure (IEE Regulation 526). All joints must be accessible for

Table 5.1 Spacing of Cable Supports. Adapted from the IEE *On Site Guide* by kind permission of the Institution of Electrical Engineers

Spacings of supports for cables in accessible positions								
Overall diameter of cable* (mm)	Maximum spacings of clips							
	Non-armoured thermosetting, thermoplastic or lead sheathed cables				Armoured cables		Mineral insulated copper sheathed or aluminium sheathed cables	
	Generally		In caravans					
	Horizontal** (mm)	Vertical** (mm)	Horizontal** (mm)	Vertical** (mm)	Horizontal** (mm)	Vertical** (mm)	Horizontal** (mm)	Vertical** (mm)
1	2	3	4	5	6	7	8	9
Not exceeding 9	250	400			–	–	600	800
Exceeding 9 and not exceeding 15	300	400	250 (for all sizes)	400 (for all sizes)	350	450	900	1200
Exceeding 15 and not exceeding 20	350	450			400	550	1500	2000
Exceeding 20 and not exceeding 40	400	550			450	600	–	–

Note: For the spacing of supports for cables having an overall diameter exceeding 40 mm, and for single-core cables having conductors of cross-sectional area 300 mm^2 and larger, the manufacturer's recommendations should be observed.
*For flat cables taken as the dimension of the major axis.
**The spacings stated for horizontal runs may be applied also to runs at an angle of more than 30° from the vertical. For runs at an angle of 30° or less from the vertical, the vertical spacings are applicable.

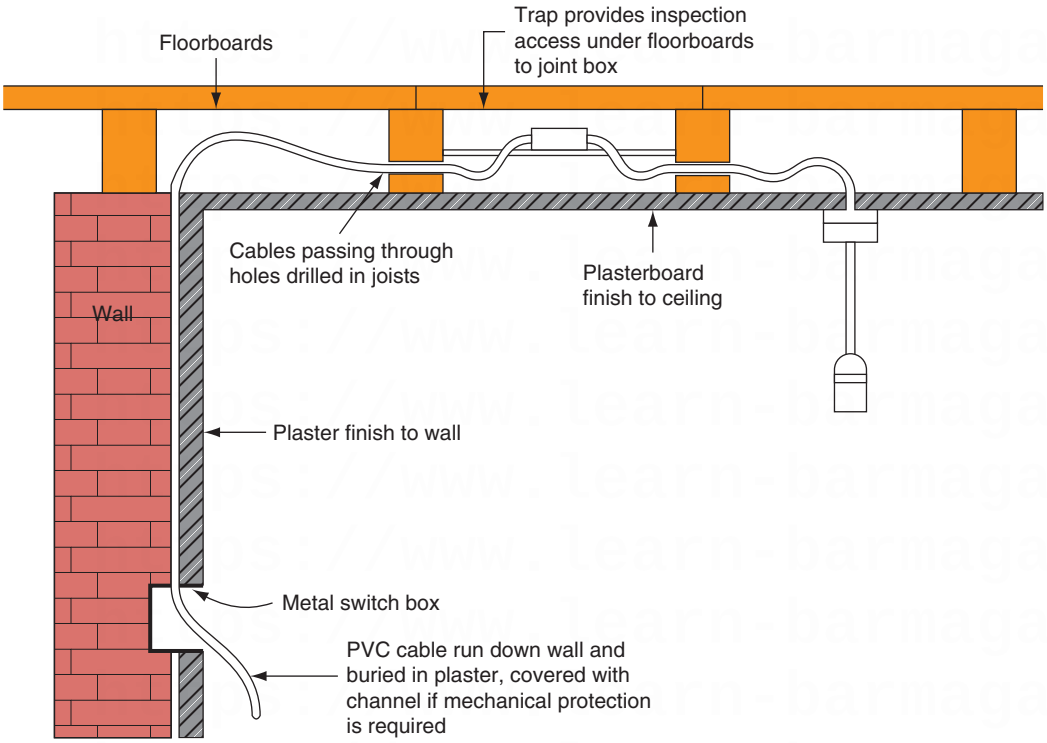

Figure 5.28 A concealed PVC sheathed wiring system.

inspection, testing and maintenance when the installation is completed (IEE Regulation 526.3).

Where PVC insulated and sheathed cables are concealed in walls, floors or partitions, they must be provided with a box incorporating an earth terminal at each outlet position. PVC cables do not react chemically with plaster, as do some cables, and consequently PVC cables may be buried under plaster. Further protection by channel or conduit is only necessary if mechanical protection from nails or screws is required or to protect them from the plasterer's trowel. However, IEE Regulation 522.6.6 now tells us that where PVC cables are to be embedded in a wall or partition at a depth of less than 50 mm they should be run along one of the permitted routes shown in Fig. 5.29. Figure 5.28 shows a typical PVC installation. To identify the most probable cable routes, IEE Regulation 522.6.6 tells us that outside a zone formed by a 150 mm border all around a wall edge, cables can only be run horizontally or vertically to a point or accessory if they are contained in a substantial earthed enclosure, such as a conduit, which can withstand nail penetration, as shown in Fig. 5.29.

Where the accessory or cable is fixed to a wall which is less than 100 mm thick, protection must also be extended to the reverse side of the wall if a position can be determined.

Where none of this protection can be complied with and the installation is to be used by ordinary people, then the cable must be given additional protection with a 30 mA RCD (IEE Regulation 522.6.7).

Where cables pass through walls, floors and ceilings the hole should be made good with incombustible material such as mortar or plaster to prevent the spread of fire (IEE Regulations 527.1.2 and 527.2.1). Cables passing through metal boxes should be bushed with a rubber grommet to prevent abrasion of the cable. Holes drilled in floor joists through which cables are run should be 50 mm below the top or 50 mm above the bottom of the joist to prevent damage to the cable by nail penetration

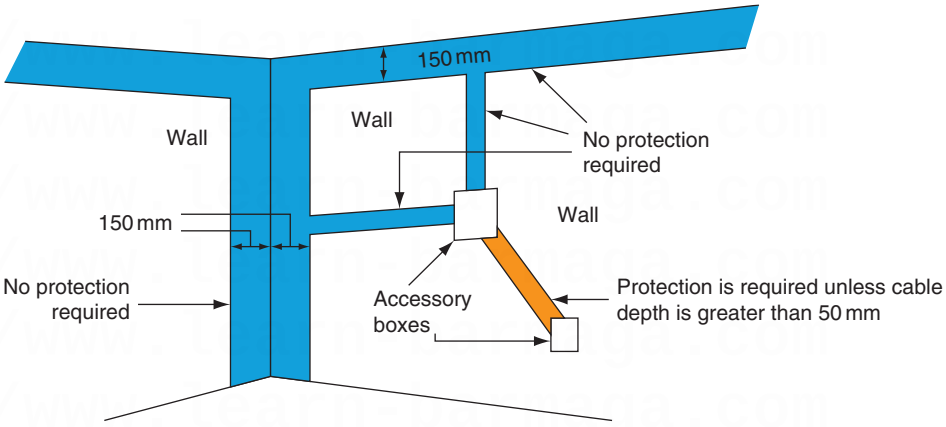

Figure 5.29 Permitted cable routes.

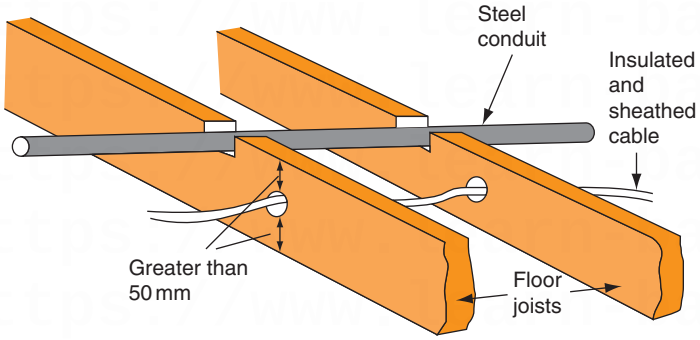

Notes:

1. Maximum diameter of hole should be 0.25 × joist depth.
2. Holes on centre line in a zone between 0.25 and 0.4 × span.
3. Maximum depth of notch should be 0.125 × joist depth.
4. Notches on top in a zone between 0.1 and 0.25 × span.
5. Holes in the same joist should be at least 3 diameters apart.

Figure 5.30 Correct installation of cables in floor joists.

(IEE Regulation 522.6.5), as shown in Fig. 5.30. PVC cables should not be installed when the surrounding temperature is below 0°C or when the cable temperature has been below 0°C for the previous 24 h because the insulation becomes brittle at low temperatures and may be damaged during installation.

Try this

Definitions

- In the margin write down a short definition of a 'competent person'.

Conduit installations

Definition

A *conduit* is a tube, channel or pipe in which insulated conductors are contained.

A **conduit** is a tube, channel or pipe in which insulated conductors are contained. The conduit, in effect, replaces the PVC outer sheath of a cable, providing mechanical protection for the insulated conductors. A conduit installation can be rewired easily or altered at any time, and this flexibility, coupled with mechanical protection, makes conduit installations popular for commercial and industrial applications. There are three types of conduit used in electrical installation work: steel, PVC and flexible.

Steel conduit

Steel conduits are made to a specification defined by BS 4568 and are either heavy gauge welded or solid drawn. Heavy gauge is made from a sheet of steel

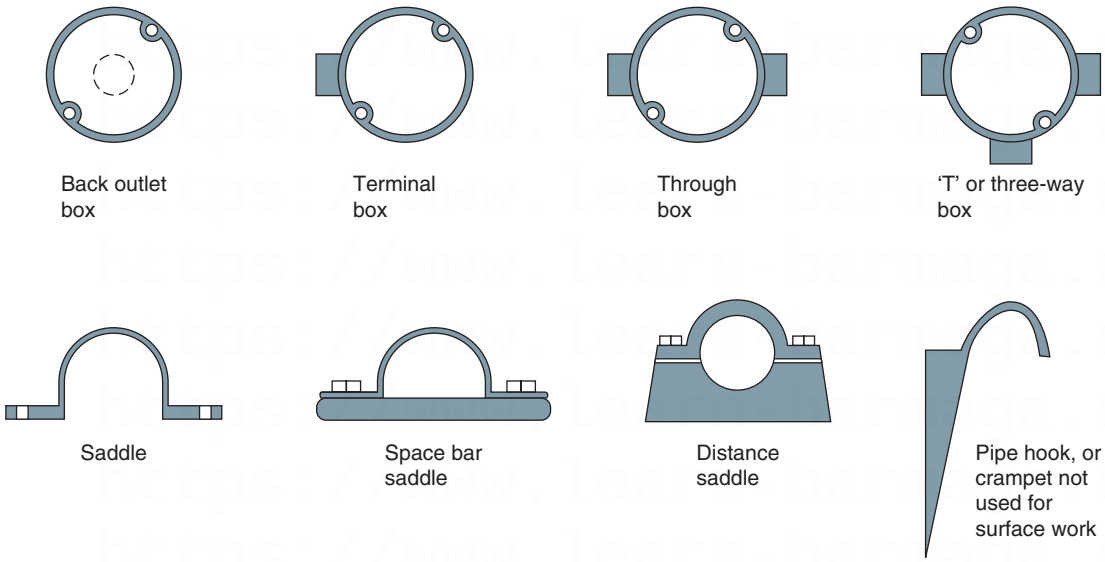

Figure 5.31 Conduit fittings and saddles.

welded along the seam to form a tube and is used for most electrical installation work. Solid drawn conduit is a seamless tube which is much more expensive and only used for special gas-tight, explosion-proof or flameproof installations.

Conduit is supplied in 3.75 m lengths and typical sizes are 16, 20, 25 and 32 mm. Conduit tubing and fittings are supplied in a black enamel finish for internal use or hot galvanized finish for use on external or damp installations. A wide range of fittings is available and the conduit is fixed using saddles or pipe hooks, as shown in Fig. 5.31.

Metal conduits are threaded with stocks and dies and bent using special bending machines. The metal conduit is also utilized as the CPC and, therefore, all connections must be screwed up tightly and all burrs removed so that cables will not be damaged as they are drawn into the conduit. Metal conduits containing a.c. circuits must contain phase and neutral conductors in the same conduit to prevent eddy currents flowing, which would result in the metal conduit becoming hot (IEE Regulations 521.5.2, 522.8.1 and 522.8.11).

PVC conduit

PVC conduit used on typical electrical installations is heavy gauge standard impact tube manufactured to BS 4607. The conduit size and range of fittings are the same as those available for metal conduit. PVC conduit is most often joined by placing the end of the conduit into the appropriate fitting and fixing with a PVC solvent adhesive. PVC conduit can be bent by hand using a bending spring of the same diameter as the inside of the conduit. The spring is pushed into the conduit to the point of the intended bend and the conduit then bent over the knee. The spring ensures that the conduit keeps its circular shape. In cold weather, a little warmth applied to the point of the intended bend often helps to achieve a more successful bend.

The advantages of a PVC conduit system are that it may be installed much more quickly than steel conduit and is non-corrosive, but it does not have the mechanical strength of steel conduit. Since PVC conduit is an insulator it cannot be used as the CPC and a separate earth conductor must be run to every outlet. It is not suitable for installations subjected to temperatures below 25°C or above 60°C. Where luminaires are suspended from PVC conduit boxes, precautions must be taken to ensure

that the lamp does not raise the box temperature or that the mass of the luminaire supported by each box does not exceed the maximum recommended by the manufacturer (IEE Regulations 522.1 and 522.2). PVC conduit also expands much more than metal conduit and so long runs require an expansion coupling to allow for conduit movement and to help prevent distortion during temperature changes.

All conduit installations must be erected first before any wiring is installed (IEE Regulation 522.8.2). The radius of all bends in conduit must not cause the cables to suffer damage, and therefore the minimum radius of bends given in Table 4E of the *On Site Guide* applies (IEE Regulation 522.8.3). All conduits should terminate in a box or fitting and meet the boxes or fittings at right angles, as shown in Fig. 5.32. Any unused conduit-box entries should be blanked off and all boxes covered with a box lid, fitting or accessory to provide complete enclosure of the conduit system. Conduit runs should be separate from other services, unless intentionally bonded, to prevent arcing occurring from a faulty circuit within the conduit, which might cause the pipe of another service to become punctured.

When drawing cables into conduit they must first be *run off* the cable drum. That is, the drum must be rotated as shown in Fig. 5.33 and not allowed to *spiral off*, which will cause the cable to twist.

Cables should be fed into the conduit in a manner which prevents any cable crossing over and becoming twisted inside the conduit. The cable insulation must not be damaged on the metal edges of the draw-in box. Cables can be pulled in on a draw wire if the run is a long one. The draw wire itself may be drawn in on a fish tape, which is a thin spring steel or plastic tape.

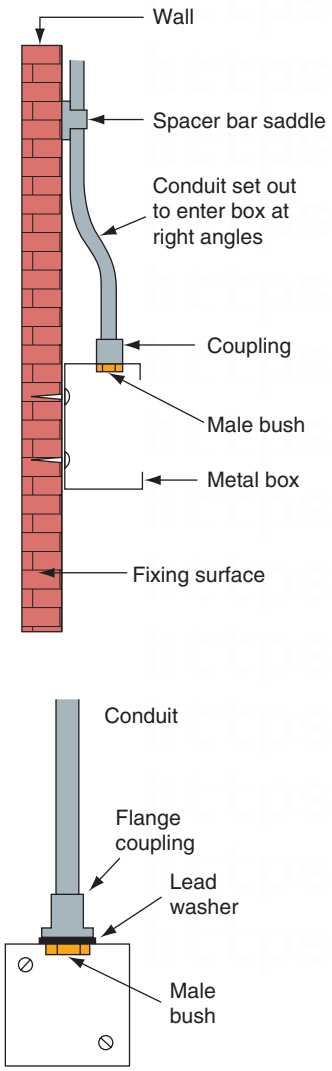

Figure 5.32 Terminating conduits.

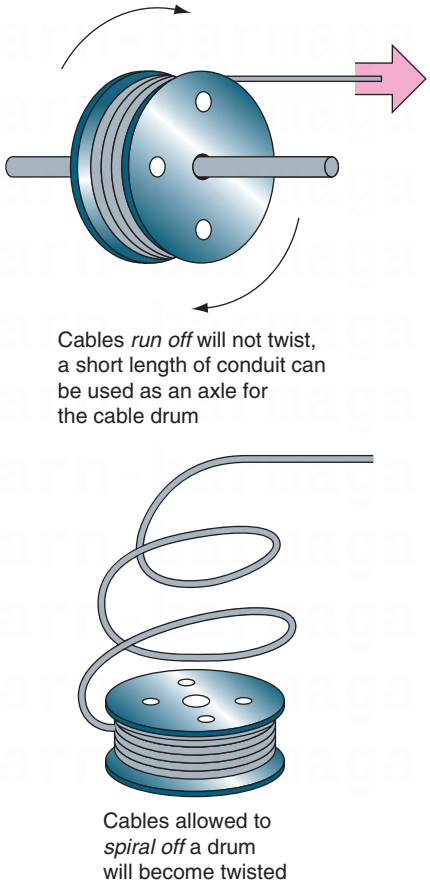

Figure 5.33 Running off cable from a drum.

A limit must be placed on the number of bends between boxes in a conduit run and the number of cables which may be drawn into a conduit to prevent the cables being strained during wiring. Appendix 5 of the *On Site Guide* gives a guide to the cable capacities of conduits and trunking.

Flexible conduit

Flexible conduit manufactured to BS 731-1: 1993 is made of interlinked metal spirals often covered with a PVC sleeving. The tubing must not be relied upon to provide a continuous earth path and, consequently, a separate CPC must be run either inside or outside the flexible tube (IEE Regulation 543.2.1).

Flexible conduit is used for the final connection to motors so that the vibrations of the motor are not transmitted throughout the electrical installation and to allow for modifications to be made to the final motor position and drive belt adjustments.

Definition

Flexible conduit manufactured to BS 731-1:1993 is made of interlinked metal spirals often covered with a PVC sleeving.

Conduit capacities

Single-PVC insulated conductors are usually drawn into the installed conduit to complete the installation. Having decided upon the type, size and number of cables required for a final circuit, it is then necessary to select the appropriate size of conduit to accommodate those cables.

Definition

Single-PVC insulated conductors are usually drawn into the installed conduit to complete the installation.

The tables in Appendix 5 of the *On Site Guide* describe a 'factor system' for determining the size of conduit required to enclose a number of conductors. The tables are shown in Tables 5.2 and 5.3. The method is as follows:

- Identify the cable factor for the particular size of conductor, see Table 5.2.
- Multiply the cable factor by the number of conductors, to give the sum of the cable factors.
- Identify the appropriate part of the conduit factor table given by the length of run and number of bends, see Table 5.3.
- The correct size of conduit to accommodate the cables is that conduit which has a factor equal to or greater than the sum of the cable factors.

Table 5.2 Conduit Cable Factors. Adapted from the IEE *On Site Guide* by kind permission of the Institution of Electrical Engineers

Cable factors for use in conduit in long straight runs over 3 m, or runs of any length incorporating bends		
Type of conductor	**Conductor cross-sectional area (mm²)**	**Cable factor**
Solid or stranded	1	16
	1.5	22
	2.5	30
	4	43
	6	58
	10	105
	16	145
	25	217

The inner radius of a conduit bend should be not less than 2.5 times the outside diameter of the conduit.

Table 5.3 Conduit Cable Factors. Adapted from the IEE *On Site Guide* by kind permission of the Institution of Electrical Engineers

Cable factors for runs incorporating bends and long straight runs

Length of run (m)	Conduit diameter (mm)																			
	16	20	25	32	16	20	25	32	16	20	25	32	16	20	25	32	16	20	25	32
	Straight				One bend				Two bends				Three bends				Four bends			
1	Covered by				188	303	543	947	177	286	514	900	158	256	463	818	130	213	388	692
1.5					182	294	528	923	167	270	487	857	143	233	422	750	111	182	333	600
2	Tables				177	286	514	900	158	256	463	818	130	213	388	692	97	159	292	529
2.5					171	278	500	878	150	244	442	783	120	196	358	643	86	141	260	474
3	A and B				167	270	487	857	143	233	422	750	111	182	333	600				
3.5	179	290	521	911	162	263	475	837	136	222	404	720	103	169	311	563				
4	177	286	514	900	158	256	463	818	130	213	388	692	97	159	292	529				
4.5	174	282	507	889	154	250	452	800	125	204	373	667	91	149	275	500				
5	171	278	500	878	150	244	442	783	120	196	358	643	86	141	260	474				
6	167	270	487	857	143	233	422	750	111	182	333	600								
7	162	263	475	837	136	222	404	720	103	169	311	563								
8	158	256	463	818	130	213	388	692	97	159	292	529								
9	154	250	452	800	125	204	373	667	91	149	275	500								
10	150	244	442	783	120	196	358	643	86	141	260	474								

Additional factors: For 38 mm diameter use 1.4 × (32 mm factor).
For 50 mm diameter use 2.6 × (32 mm factor).
For 63 mm diameter use 4.2 × (32 mm factor).

Example 1

Six 2.5 mm^2 PVC insulated cables are to be run in a conduit containing two bends between boxes 10 m apart. Determine the minimum size of conduit to contain these cables.

From Table 5.2:

$$\text{The factor for one } 2.5\,\text{mm}^2 \text{ cable} = 30$$
$$\text{The sum of the cable factors} = 6 \times 30$$
$$= 180$$

From Table 5.3, a 25 mm conduit, 10 m long and containing two bends, has a factor of 260. A 20 mm conduit containing two bends only has a factor of 141 which is less than 180, the sum of the cable factors and, therefore, 25 mm conduit is the minimum size to contain these cables.

Example 2

Ten 1.0 mm^2 PVC insulated cables are to be drawn into a plastic conduit which is 6 m long between boxes and contains one bend. A 4.0 mm PVC insulated CPC is also included. Determine the minimum size of conduit to contain these conductors.

From Table 5.2:

$$\text{The factor for one } 1.0\,\text{mm cable} = 16$$
$$\text{The factor for one } 4.0\,\text{mm cable} = 43$$
$$\text{The sum of the cable factors} = (10 \times 16) + (1 \times 43)$$
$$= 203$$

From Table 5.3, a 20 mm conduit, 6 m long and containing one bend, has a factor of 233. A 16 mm conduit containing one bend only has a factor of 143 which is less than 203, the sum of the cable factors and, therefore, 20 mm conduit is the minimum size to contain these cables.

Trunking installations

A **trunking** is an enclosure provided for the protection of cables which is normally square or rectangular in cross-section, having one removable side. Trunking may be thought of as a more accessible conduit system and for industrial and commercial installations it is replacing the larger conduit sizes. A trunking system can have great flexibility when used in conjunction with conduit; the trunking forms the background or framework for the installation, with conduits running from the trunking to the point controlling the current-using apparatus. When an alteration or extension is required it is easy to drill a hole in the side of the trunking and run a conduit to the new point. The new wiring can then be drawn through the new conduit and the existing trunking to the supply point.

Definition

A *trunking* is an enclosure provided for the protection of cables which is normally square or rectangular in cross-section, having one removable side. Trunking may be thought of as a more accessible conduit system.

Trunking is supplied in 3 m lengths and various cross-sections measured in millimetres from 50 × 50 up to 300 × 150. Most trunking is available in either steel or plastic.

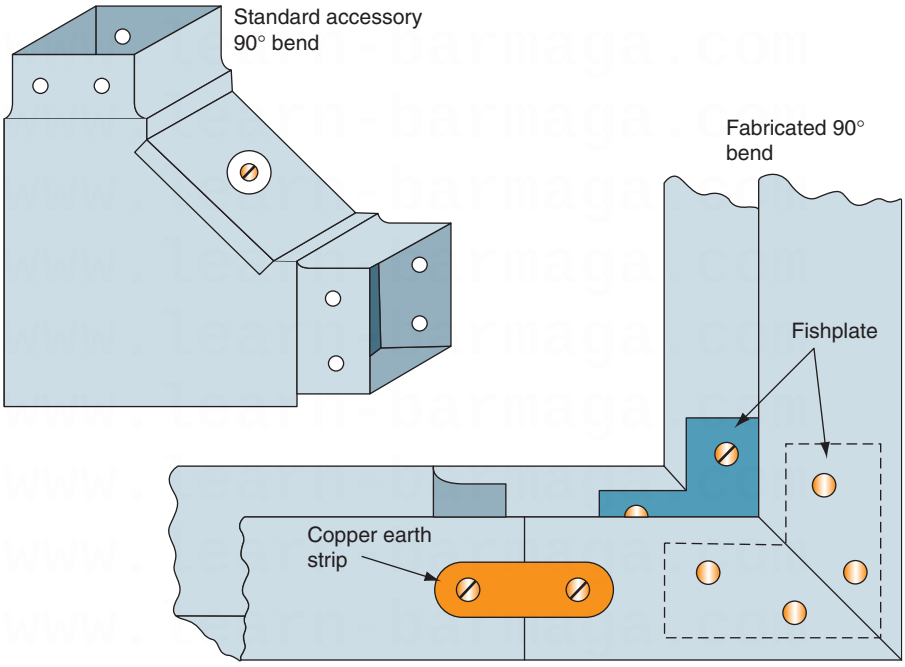

Figure 5.34 Alternative trunking bends.

Definition

Metallic trunking is formed from mild steel sheet, coated with grey or silver enamel paint for internal use or a hot-dipped galvanized coating where damp conditions might be encountered.

Metallic trunking

Metallic trunking is formed from mild steel sheet, coated with grey or silver enamel paint for internal use or a hot-dipped galvanized coating where damp conditions might be encountered and made to a specification defined by BS EN 500 85. A wide range of accessories is available, such as 45° bends, 90° bends, tee and four-way junctions, for speedy on-site assembly. Alternatively, bends may be fabricated in lengths of trunking, as shown in Fig. 5.34. This may be necessary or more convenient if a bend or set is non-standard, but it does take more time to fabricate bends than merely to bolt on standard accessories.

When fabricating bends the trunking should be supported with wooden blocks for sawing and filing, in order to prevent the sheet-steel vibrating or becoming deformed. Fish plates must be made and riveted or bolted to the trunking to form a solid and secure bend. When manufactured bends are used, the continuity of the earth path must be ensured across the joint by making all fixing screw connections very tight, or fitting a separate copper strap between the trunking and the standard bend. If an earth continuity test on the trunking is found to be unsatisfactory, an insulated CPC must be installed inside the trunking. The size of the protective conductor will be determined by the largest cable contained in the trunking, as described by Table 54.7 of the IEE Regulations. If the circuit conductors are less than 16 mm^2, then a 16 mm^2 CPC will be required.

Non-metallic trunking

Trunking and trunking accessories are also available in high-impact PVC. The accessories are usually secured to the lengths of trunking with a PVC solvent adhesive. PVC trunking, like PVC conduit, is easy to install and is non-corrosive. A separate CPC will need to be installed and non-metallic trunking may require more frequent fixings because it is less rigid than metallic trunking. All trunking fixings should use round-headed screws to prevent damage to

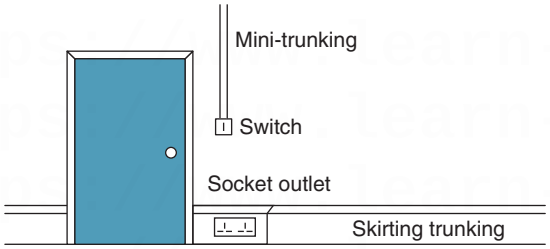

Figure 5.35 Typical installation of skirting trunking and mini-trunking.

cables since the thin sheet construction makes it impossible to countersink screw heads.

Mini-trunking

Mini-trunking is very small PVC trunking, ideal for surface wiring in domestic and commercial installations such as offices. The trunking has a cross-section of 16 × 16 mm, 25 × 16 mm, 38 × 16 mm or 38 × 25 mm and is ideal for switch drops or for housing auxiliary circuits such as telephone or audio equipment wiring. The modern square look in switches and sockets is complemented by the mini-trunking which is very easy to install (see Fig. 5.35).

Definition

Mini-trunking is very small PVC trunking, ideal for surface wiring in domestic and commercial installations such as offices.

Skirting trunking

Skirting trunking is a trunking manufactured from PVC or steel in the shape of a skirting board and is frequently used in commercial buildings such as hospitals, laboratories and offices. The trunking is fitted around the walls of a room at either the skirting board level or at the working surface level and contains the wiring for socket outlets and telephone points which are mounted on the lid, as shown in Fig. 5.35.

Definition

Skirting trunking is a trunking manufactured from PVC or steel in the shape of a skirting board and is frequently used in commercial buildings such as hospitals, laboratories and offices.

Where any trunking passes through walls, partitions, ceilings or floors, short lengths of lid should be fitted so that the remainder of the lid may be removed later without difficulty. Any damage to the structure of the buildings must be made good with mortar, plaster or concrete in order to prevent the spread of fire. Fire barriers must be fitted inside the trunking every 5 m, or at every floor level or room dividing wall if this is a shorter distance, as shown in Fig. 5.36(a).

Where trunking is installed vertically, the installed conductors must be supported so that the maximum unsupported length of non-sheathed cable does not exceed 5 m. Figure 5.36(b) shows cables woven through insulated pin supports, which is one method of supporting vertical cables.

PVC insulated cables are usually drawn into an erected conduit installation or laid into an erected trunking installation. Table 5D of the *On Site Guide* only gives factors for conduits up to 32 mm in diameter, which would indicate that conduits larger than this are not in frequent or common use. Where a cable enclosure greater than 32 mm is required because of the number or size of the conductors, it is generally more economical and convenient to use trunking.

Trunking capacities

The **ratio** of the space occupied by all the cables in a conduit or trunking to the whole space enclosed by the conduit or trunking is known as the **space factor**. Where sizes and types of cable and trunking are not covered by the tables in the *On Site Guide*, a space factor of 45% must not be exceeded. This means that the cables must not fill more than 45% of the space enclosed by the trunking. The tables take this factor into account.

Definition

The *ratio* of the space occupied by all the cables in a conduit or trunking to the whole space enclosed by the conduit or trunking is known as the *space factor.*

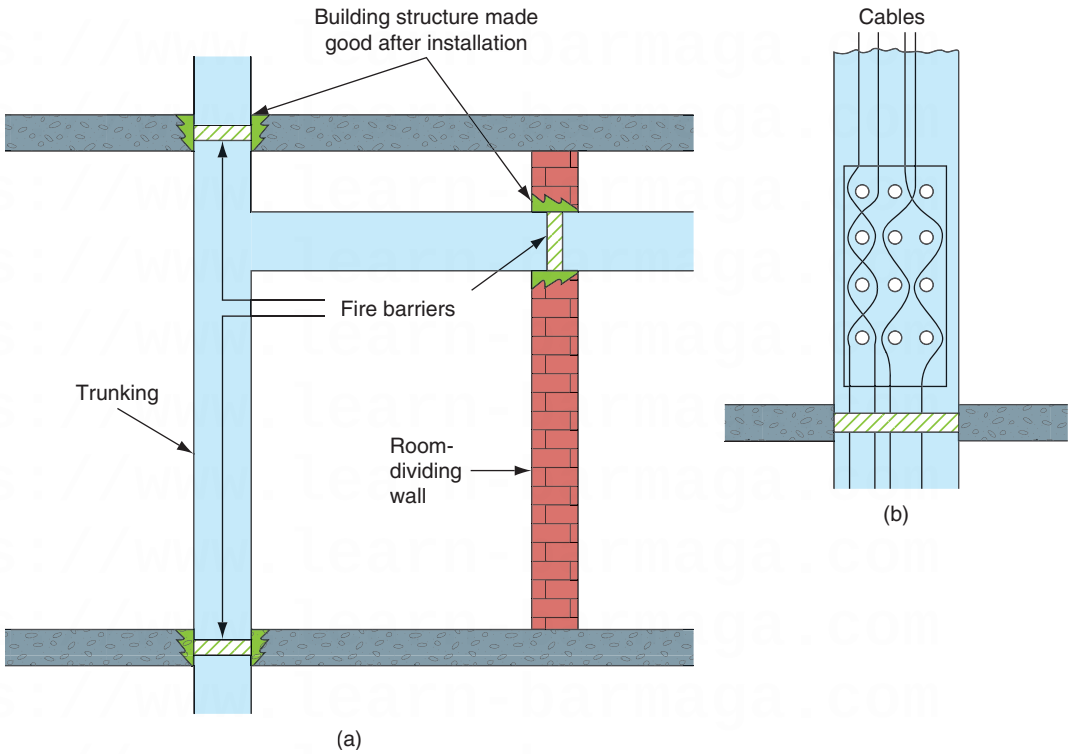

Figure 5.36 Installation of trunking: (a) fire barriers in trunking and (b) cable supports in vertical trunking.

Table 5.4 Trunking Cable Factors. Adapted from the IEE *On Site Guide* by kind permission of the Institution of Electrical Engineers

Cable factors for trunking			
Type of conductor	**Conductor cross-sectional area (mm^2)**	**PVC BS 6004 Cable factor**	**Thermosetting BS 7211 Cable factor**
Solid	1.5	8.0	8.6
	2.5	11.9	11.9
Stranded	1.5	8.6	9.6
	2.5	12.6	13.9
	4	16.6	18.1
	6	21.2	22.9
	10	35.3	36.3
	16	47.8	50.3
	25	73.9	75.4

Notes: These factors are for metal trunking and may be optimistic for plastic trunking where the cross-sectional area available may be significantly reduced from the nominal by the thickness of the wall material.
The provision of spare space is advisable; however, any circuits added at a later date must take into account grouping. Appendix 4, BS 7671.

To calculate the size of trunking required to enclose a number of cables:

- Identify the cable factor for the particular size of conductor, see Table 5.4.
- Multiply the cable factor by the number of conductors to give the sum of the cable factors.

Table 5.5 Trunking Cable Factors. Adapted from the IEE *On Site Guide* by kind permission of the Institution of Electrical Engineers

Factors for trunking			
Dimensions of trunking (mm × mm)	**Factor**	**Dimensions of trunking (mm × mm)**	**Factor**
50 × 38	767	200 × 100	8572
50 × 50	1037	200 × 150	13001
75 × 25	738	200 × 200	17429
75 × 38	1146	225 × 38	3474
75 × 50	1555	225 × 50	4671
75 × 75	2371	225 × 75	7167
100 × 25	993	225 × 100	9662
100 × 38	1542	225 × 150	14652
100 × 50	2091	225 × 200	19643
100 × 75	3189	225 × 225	22138
100 × 100	4252	300 × 38	4648
150 × 38	2999	300 × 50	6251
150 × 50	3091	300 × 75	9590
150 × 75	4743	300 × 100	12929
150 × 100	6394	300 × 150	19607
150 × 150	9697	300 × 200	26285
200 × 38	3082	300 × 225	29624
200 × 50	4145	300 × 300	39428
200 × 75	6359		
Space factor – 45% with trunking thickness taken into account.			

- Consider the factors for trunking shown in Table 5.5. The correct size of trunking to accommodate the cables is that trunking which has a factor equal to, or greater than, the sum of the cable factors.

Example 3

Calculate the minimum size of trunking required to accommodate the following single-core PVC cables:

20 × 1.5 mm solid conductors
20 × 2.5 mm solid conductors
21 × 4.0 mm stranded conductors
16 × 6.0 mm stranded conductors

(*Continued*)

Example 3 (Continued)

From Table 5.4, the cable factors are:

for 1.5 mm solid cable – 8.0
for 2.5 mm solid cable – 11.9
for 4.0 mm stranded cable – 16.6
for 6.0 mm stranded cable – 21.2

The sum of the cable terms is:

$(20 \times 8.0) + (20 \times 11.9) + (21 \times 16.6) + (16 \times 21.2) = 1085.8$. From Table 5.5, 75 × 38 mm trunking has a factor of 1146 and, therefore, the minimum size of trunking to accommodate these cables is 75 × 38 mm, although a larger size, say 75 × 50 mm, would be equally acceptable if this was more readily available as a standard stock item.

Segregation of circuits

Where an installation comprises a mixture of low-voltage and very low-voltage circuits such as mains lighting and power, fire alarm and telecommunication circuits, they must be separated or *segregated* to prevent electrical contact (IEE Regulation 528.1).

For the purpose of these regulations various circuits are identified by one of two bands as follows:

Band I: telephone, radio, bell, call and intruder alarm circuits, emergency circuits for fire alarm and emergency lighting.
Band II: mains voltage circuits.

When Band I circuits are insulated to the same voltage as Band II circuits, they may be drawn into the same compartment.

When trunking contains rigidly fixed metal barriers along its length, the same trunking may be used to enclose cables of the separate bands without further precautions, provided that each band is separated by a barrier, as shown in Fig. 5.37.

Multi-compartment PVC trunking cannot provide band segregation since there is no metal screen between the bands. This can only be provided in PVC trunking if screened cables are drawn into the trunking.

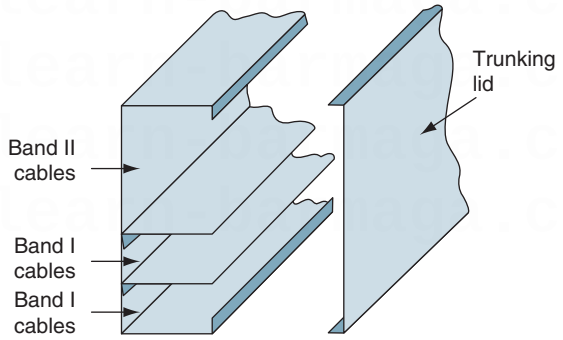

Figure 5.37 Segregation of cables in trunking.

Cable tray installations

Cable tray is a sheet-steel channel with multiple holes. The most common finish is hot-dipped galvanized but PVC-coated tray is also available. It is used extensively on large industrial and commercial installations for supporting MI and SWA cables which are laid on the cable tray and secured with cable ties through the tray holes.

Cable tray should be adequately supported during installation by brackets which are appropriate for the particular installation. The tray should be bolted to the brackets with round-headed bolts and nuts, with the round head inside the tray so that cables drawn along the tray are not damaged.

The tray is supplied in standard widths from 50 to 900 mm, and a wide range of bends, tees and reducers is available. Figure 5.38 shows a factory-made 90° bend at B. The tray can also be bent using a cable tray bending machine to create bends such as that shown at A in Fig. 5.38. The installed tray should be securely bolted with round-headed bolts where lengths or accessories are attached, so that there is a continuous earth path which may be bonded to an electrical earth. The whole tray should provide a firm support for the cables and therefore the tray fixings must be capable of supporting the weight of both the tray and cables.

Definition

Cable tray is a sheet-steel channel with multiple holes. The most common finish is hot-dipped galvanized but PVC-coated tray is also available. It is used extensively on large industrial and commercial installations for supporting MI and SWA cables which are laid on the cable tray and secured with cable ties through the tray holes.

PVC/SWA cable installations

Steel wire armoured PVC insulated cables are now extensively used on industrial installations and often laid on cable tray. This type of installation has the advantage of flexibility, allowing modifications to be made speedily as the need arises. The cable has a steel wire armouring giving mechanical protection and permitting it to be laid directly in the ground or in ducts, or it may be fixed directly or laid on a cable tray. Figure 5.23 shows a PVC/SWA cable.

It should be remembered that when several cables are grouped together the current rating will be reduced according to the correction factors given in Appendix 4 (Table 4C1) of the IEE Regulations.

Definition

Steel wire armoured PVC insulated cables are now extensively used on industrial installations and often laid on cable tray.

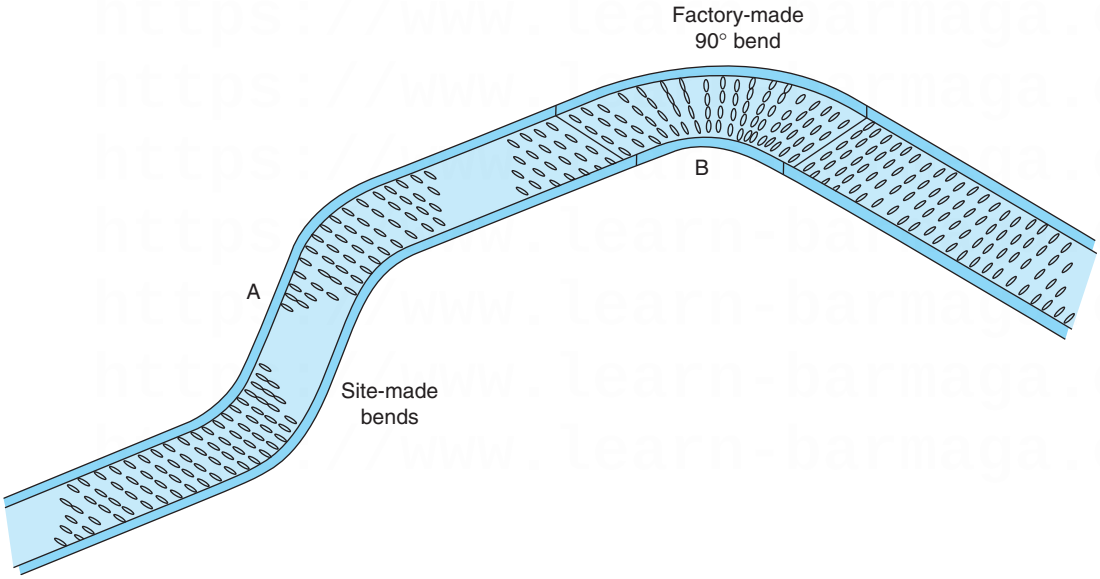

Figure 5.38 Cable tray with bends.

The cable is easy to handle during installation, is pliable and may be bent to a radius of eight times the cable diameter. The PVC insulation would be damaged if installed in ambient temperatures over 70°C or below 0°C, but once installed the cable can operate at low temperatures.

The cable is terminated with a simple gland which compresses a compression ring on to the steel wire armouring to provide the earth continuity between the switchgear and the cable.

MI cable installations

Mineral insulated cables are available for general wiring as:

- light-duty MI cables for voltages up to 600 V and sizes from 1.0 to 10 mm^2,
- heavy-duty MI cables for voltages up to 1000 V and sizes from 1.0 to 150 mm^2.

Figure 5.24 shows an MI cable and termination.

The cables are available with bare sheaths or with a PVC oversheath. The cable sheath provides sufficient mechanical protection for all but the most severe situations, where it may be necessary to fit a steel sheath or conduit over the cable to give extra protection, particularly near floor level in some industrial situations.

The cable may be laid directly in the ground, in ducts, on cable tray or clipped directly to a structure. It is not affected by water, oil or the cutting fluids used in engineering and can withstand very high temperature or even fire. The cable diameter is small in relation to its current carrying capacity and it should last indefinitely if correctly installed because it is made from inorganic materials. These characteristics make the cable ideal for Band I emergency circuits, boiler-houses, furnaces, petrol stations and chemical plant installations.

The cable is supplied in coils and should be run off during installation and not spiralled off, as described in Fig. 5.33 for conduit. The cable can be work hardened if over-handled or over-manipulated. This makes the copper outer sheath stiff and may result in fracture. The outer sheath of the cable must not be penetrated, otherwise moisture will enter the magnesium oxide insulation and lower its resistance. To reduce the risk of damage to the outer sheath during installation, cables should be straightened and formed by hammering with a hide hammer or a block of wood and a steel hammer. When bending MI cables the radius of the bend should not cause the cable to become damaged and clips should provide adequate support (IEE Regulation 522.8.5); see Table 5.1.

The cable must be prepared for termination by removing the outer copper sheath to reveal the copper conductors. This can be achieved by using a rotary stripper tool or, if only a few cables are to be terminated, the outer sheath can be removed with side cutters, peeling off the cable in a similar way to peeling the skin from a piece of fruit with a knife. When enough conductor has been revealed, the outer sheath must be cut off square to facilitate the fitting of the sealing pot, and this can be done with a ringing tool. All excess magnesium oxide powder must be wiped from the conductors with a clean cloth. This is to prevent moisture from penetrating the seal by capillary action.

Cable ends must be terminated with a special seal to prevent the entry of moisture. Figure 5.24 shows a brass screw-on seal and gland assembly, which allows termination of the MI cables to standard switchgear and conduit fittings. The sealing pot is filled with a sealing compound, which is pressed in from one

side only to prevent air pockets forming, and the pot closed by crimping home the sealing disc with an MI crimping tool such as that shown in Fig. 5.20. Such an assembly is suitable for working temperatures up to 105°C. Other compounds or powdered glass can increase the working temperature up to 250°C.

The conductors are not identified during the manufacturing process and so it is necessary to identify them after the ends have been sealed. A simple continuity or polarity test, as described later in this chapter, can identify the conductors which are then sleeved or identified with coloured markers.

Connection of MI cables can be made directly to motors, but to absorb the vibrations a 360° loop should be made in the cable just before the termination. If excessive vibration is expected, the MI cable should be terminated in a conduit through box and the final connection made by flexible conduit.

Copper MI cables may develop a green incrustation or patina on the surface, even when exposed to normal atmospheres. This is not harmful and should not be removed. However, if the cable is exposed to an environment which might encourage corrosion, an MI cable with an overall PVC sheath should be used.

Support and fixing methods for electrical equipment

Individual conductors may be installed in trunking or conduit and individual cables may be clipped directly to a surface or laid on a tray using the wiring system which is most appropriate for the particular installation. The installation method chosen will depend upon the contract specification, the fabric of the building and the type of installation – domestic, commercial or industrial.

It is important that the wiring systems and fixing methods are appropriate for the particular type of installation and compatible with the structural materials used in the building construction. The electrical installation must be compatible with the installed conditions, must not damage the fabric of the building or weaken load-bearing girders or joists.

The installation designer must ask himself the following questions:

- Does this wiring system meet the contract specification?
- Is the wiring system compatible with this particular installation?
- Do I need to consider any special regulations such as those required by agricultural and horticultural installations, swimming pools or flameproof installations?
- Will this type of electrical installation be aesthetically acceptable and compatible with the other structural materials?

The installation electrician must ask himself the following questions:

- Am I using materials and equipment which meet the relevant British Standards and the contract specification?
- Am I using an appropriate fixing method for this wiring system or piece of equipment?
- Will the structural material carry the extra load that my conduits and cables will place upon it?
- Will my fixings and fittings weaken the existing fabric of the building?
- Will the electrical installation interfere with other supplies and services?

- Will all terminations and joints be accessible upon completion of the erection period? (IEE Regulations 513.1 and 526.3.)
- Will the materials being used for the electrical installation be compatible with the intended use of the building?
- Am I working safely and efficiently and in accordance with the IEE Regulations (BS 7671)?

A domestic installation usually calls for a PVC insulated and sheathed wiring system. These cables are generally fixed using plastic clips incorporating a masonry nail which means that the cables can be fixed to wood, plaster or brick with almost equal ease.

Cables must be run straight and neatly between clips fixed at equal distances which provide adequate support for the cable so that it does not become damaged by its own weight (IEE Regulation 522.8.4) and shown in Table 5.1.

A commercial or industrial installation might call for a conduit or trunking wiring system. A conduit is a tube, channel or pipe in which insulated conductors are contained. The conduit, in effect, replaces the PVC outer sheath of a cable, providing mechanical protection for the insulated conductors. A conduit installation can be rewired easily or altered at any time and this flexibility, coupled with mechanical protection, makes conduit installations popular for commercial and industrial applications. Steel conduits and trunking are, however, much heavier than single cables and, therefore, need substantial and firm fixings and supports. A wide range of support brackets is available for fixing conduit, trunking and tray installations to the fabric of a commercial or industrial installation. Some of these are shown in Fig. 5.39.

When a heavier or more robust fixing is required to support cabling or equipment, a nut and bolt or screw fixing is called for. Wood screws may be screwed directly into wood but when fixing to stone, brick or concrete it is first necessary to drill a hole in the masonry material which is then plugged with a material (usually plastic) to which a screw can be secured.

For the most robust fixing to masonry materials, an expansion bolt such as that made by Rawlbolt should be used.

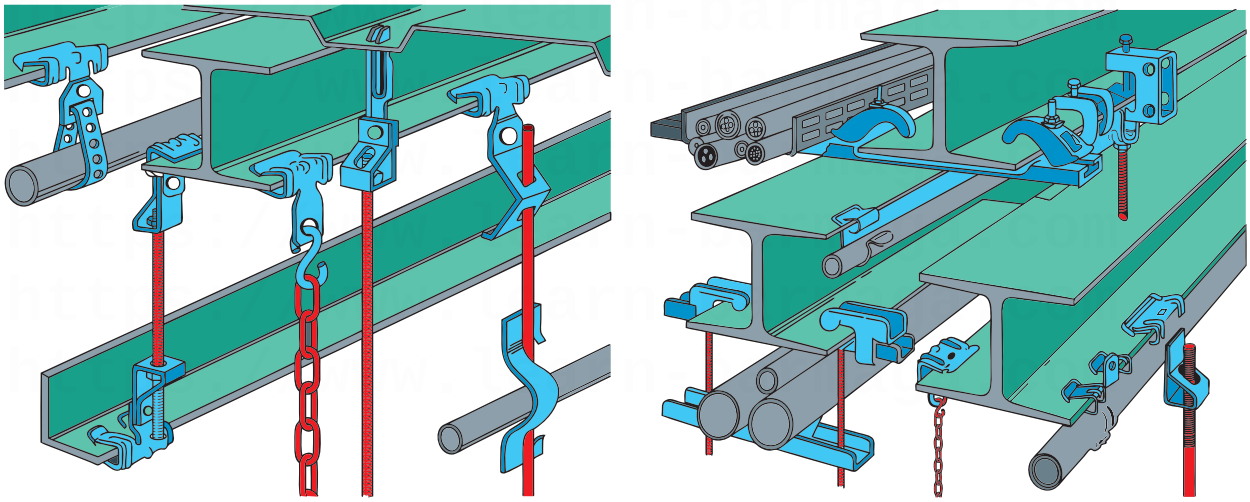

Figure 5.39 Some manufactured girder supports for electrical equipment.

For lightweight fixings to hollow partitions or plasterboard, a spring toggle can be used. Plasterboard cannot support a screw fixing directly into itself but the spring toggle spreads the load over a larger area, making the fixing suitable for light loads.

Let us look in a little more detail at individual joining, support and fixing methods.

Joining materials

Plastic can be joined with an appropriate solvent. Metal may be welded, brazed or soldered, but the most popular method of on-site joining of metal on electrical installations is by nuts and bolts or rivets.

A nut and bolt joint may be considered a temporary fastening since the parts can easily be separated if required by unscrewing the nut and removing the bolt. A rivet is a permanent fastening since the parts riveted together cannot be easily separated.

Two pieces of metal joined by a bolt and nut and by a machine screw and nut are shown in Fig. 5.40. The nut is tightened to secure the joint. When joining trunking or cable trays, a round head machine screw should be used with the head inside to reduce the risk of damage to cables being drawn into the trunking or tray.

Thin sheet material such as trunking is often joined using a pop riveter. Special rivets are used with a hand tool, as shown in Fig. 5.41. Where possible, the parts to be riveted should be clamped and drilled together with a clearance hole for the rivet. The stem of the rivet is pushed into the nose bush of the riveter until the alloy sleeve of the rivet is flush with the nose bush (a). The rivet is then placed in the hole and the handles squeezed together (b). The alloy sleeve is compressed and the rivet stem will break off when the rivet is set and the joint complete (c). To release the broken-off stem piece, the nose bush is turned upwards and the handles opened sharply. The stem will fall out and is discarded (d).

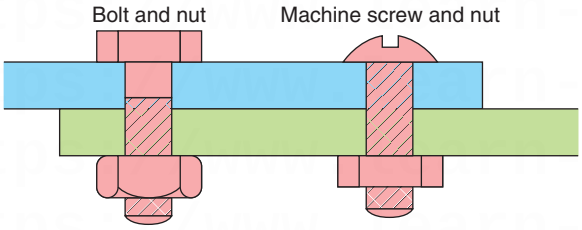

Figure 5.40 Joining of metal.

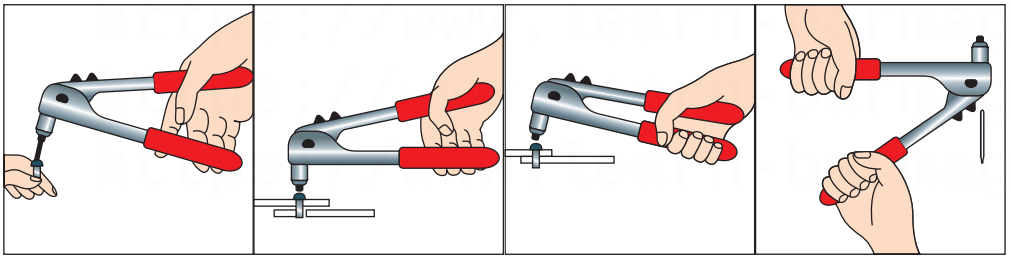

Figure 5.41 Metal joining with pop rivets.

Bracket supports

Conduit and trunking may be fixed directly to a surface such as a brick wall or concrete ceiling, but where cable runs are across girders or other steel framework, spring steel clips may be used but support brackets or clips often require manufacturing.

The brackets are usually made from flat iron, which is painted after manufacturing to prevent corrosion. They may be made on-site by the electrician or, if many brackets are required, the electrical contractor may make a working sketch with dimensions and have the items manufactured by a blacksmith or metal fabricator.

The type of bracket required will be determined by the installation, but Fig. 5.42 gives some examples of brackets which may be modified to suit particular circumstances.

Fixing methods

PVC insulated and sheathed wiring systems are usually fixed with PVC clips in order to comply with IEE Regulations 522.8.3 and 4 and shown in Table 5.1. The clips are supplied in various sizes to hold the cable firmly, and the fixing nail is a hardened masonry nail. Figure 5.43 shows a cable clip of this type. The use of a masonry nail means that fixings to wood, plaster, brick or stone can be made with equal ease.

When heavier cables, trunking, conduit or luminaires have to be fixed, a screw fixing is often needed. Wood screws may be screwed directly into wood but when fixing to brick, stone, plaster or concrete it is necessary to drill a hole in the masonry material, which is then plugged with a material to which the screw can be secured.

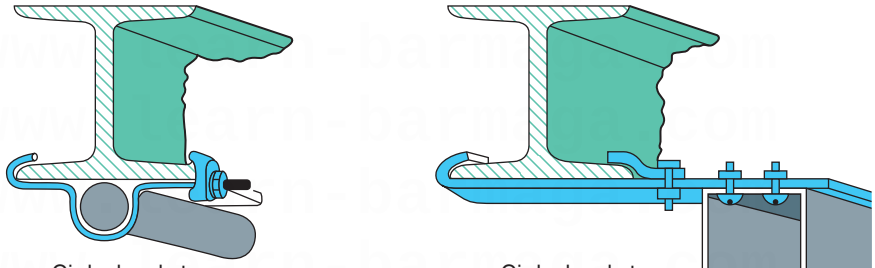

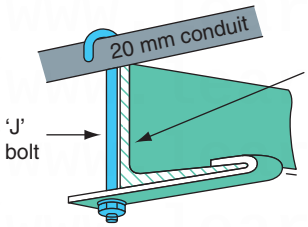

Conduit fixed to angle iron truss with flat iron and 'J' bolt

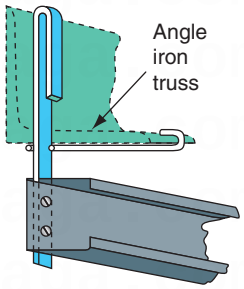

Trunking fixed to angle iron truss by a variation of flat iron and 'J' bolt

Figure 5.42 Bracket supports for conduits and trunking.

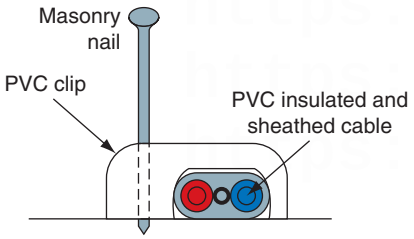

Figure 5.43 PVC insulated and sheathed cable clip.

Plastic plugs

A **plastic plug** is made of a hollow plastic tube split up to half its length to allow for expansion. Each size of plastic plug is colour coded to match a wood screw size.

A hole is drilled into the masonry, using a masonry drill of the same diameter, to the length of the plastic plug (see Fig. 5.44). The plastic plug is inserted into the hole and tapped home until it is level with the surface of the masonry. Finally, the fixing screw is driven into the plastic plug until it becomes tight and the fixture is secure.

Definition

A *plastic plug* is made of a hollow plastic tube split up to half its length to allow for expansion. Each size of plastic plug is colour coded to match a wood screw size.

Expansion bolts

The most well known **expansion bolt** is made by Rawlbolt and consists of a split iron shell held together by a steel ferrule at one end and a spring wire clip at the other end. Tightening the bolt draws up an expanding bolt inside the split iron shell, forcing the iron to expand and grip the masonry. Rawlbolts are for heavy-duty masonry fixings (see Fig. 5.45).

A hole is drilled in the masonry to take the iron shell and ferrule. The iron shell is inserted with the spring wire clip end first so that the ferrule is at the outer surface. The bolt is passed through the fixture, located in the expanding nut and tightened until the fixing becomes secure.

Definition

The most well known *expansion bolt* is made by Rawlbolt and consists of a split iron shell held together by a steel ferrule at one end and a spring wire clip at the other end. Tightening the bolt draws up an expanding bolt inside the split iron shell, forcing the iron to expand and grip the masonry. Rawlbolts are for heavy-duty masonry fixings.

Spring toggle bolts

A **spring toggle bolt** provides one method of fixing to hollow partition walls which are usually faced with plasterboard and a plaster skimming. Plasterboard and plaster wall or ceiling surfaces are not strong enough to support a load fixed

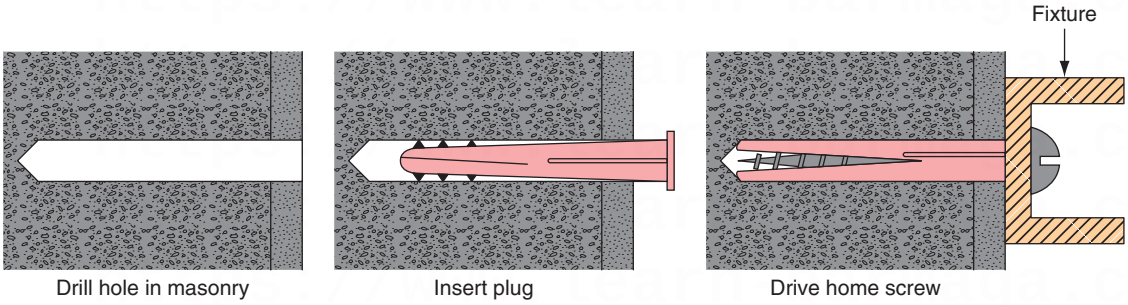

Figure 5.44 Screw fixing to plastic plug.

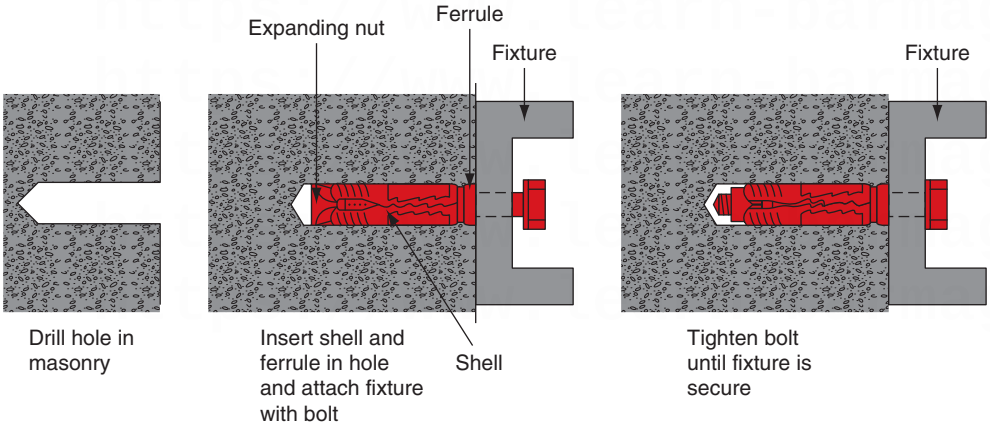

Figure 5.45 Expansion bolt fixing.

Definition

A *spring toggle bolt* provides one method of fixing to hollow partition walls which are usually faced with plasterboard and a plaster skimming.

directly into the plasterboard, but the spring toggle spreads the load over a larger area, making the fixing suitable for light loads (see Fig. 5.46).

A hole is drilled through the plasterboard and into the cavity. The toggle bolt is passed through the fixture and the toggle wings screwed into the bolt. The toggle wings are compressed and passed through the hole in the plasterboard and into the cavity where they spring apart and rest on the cavity side of the plasterboard. The bolt is tightened until the fixing becomes firm. The bolt of the spring toggle cannot be removed after fixing without the loss of the toggle wings. If it becomes necessary to remove and refix the fixture a new toggle bolt will have to be used.

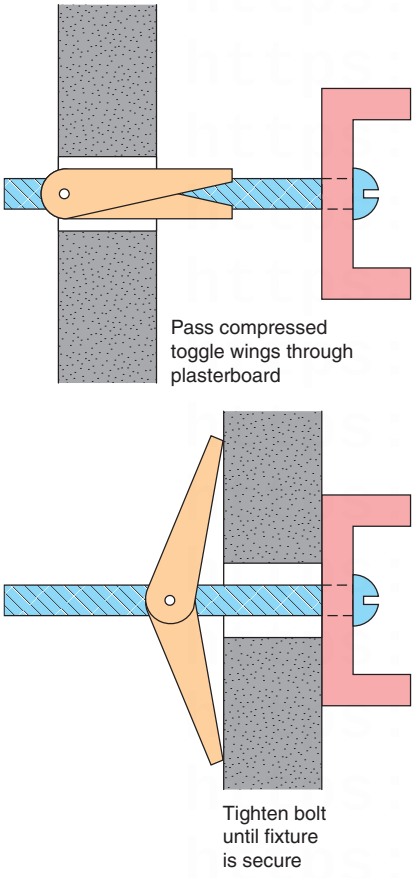

Figure 5.46 Spring toggle bolt fixing.

Special installations or locations

All electrical installations and installed equipment must be safe to use and free from the dangers of electric shock, but some installations or locations require special consideration because of the inherent dangers of the installed conditions. The danger may arise because of the corrosive or explosive nature of the atmosphere, because the installation must be used in damp or low-temperature conditions or because there is a need to provide additional mechanical protection for the electrical system. Part 7 of the IEE Regulations deals with these special installations or locations.

Restoration of the building structure

If the structure, or we sometimes call it the fabric of the building, has been damaged as a result of your electrical repair work, it must be made good before you hand the installation, system or equipment back to the client.

Where a wiring system passes through elements of the building construction such as floors, walls, roofs, ceilings, partitions or cavity barriers, the openings remaining after the passage of the wiring system must be sealed according to the degree of fire resistance demonstrated by the original building material (IEE Regulation 527.2).

You should always make good the structure of the building using appropriate materials **before** you leave the job so that the general building structural performance and fire safety are not reduced. If there is also a little cosmetic plastering and decorating to be done, then who actually will carry out this work is a matter of negotiation between the client and the electrical contractor.

Safety first

Fire

If your electrical activities cause damage to the fabric of the building then:

- the openings remaining must be sealed according to the degree of fire resistance demonstrated by the original building material.
- IEE Regulation 527.2.

Disposal of waste

Having successfully carried out the necessary repairs or having completed any work in the electrotechnical industry, we come to the final practical task, leaving the site in a safe and clean condition and the removal of any waste material. This is an important part of your company's 'good customer relationships' with the client. We also know from Chapter 1 of this book that we have a 'duty of care' for the waste that we produce as an electrical company (see Chapter 1, under the sub-heading 'Disposing of waste').

We have also said many times in this book that having a good attitude to health and safety, working conscientiously and neatly, keeping passageways clear and regularly tidying up the workplace is the sign of a good and competent craftsman. But what do you do with the rubbish that the working environment produces? Well:

- All the packaging material for electrical fittings and accessories usually goes into either your employer's skip or the skip on site designated for that purpose.

- All the off-cuts of conduit, trunking and tray also go into the skip.
- In fact, most of the general site debris will probably go into the skip and the waste disposal company will take the skip contents to a designated local council landfill area for safe disposal.
- The part coils of cable and any other reusable leftover lengths of conduit, trunking or tray will be taken back to your employer's stores area. Here it will be stored for future use and the returned quantities deducted from the costs allocated to that job.
- What goes into the skip for normal disposal into a landfill site is usually a matter of common sense. However, some substances require special consideration and disposal. We will now look at asbestos and large quantities of used fluorescent tubes which are classified as 'special waste' or 'hazardous waste'.

Asbestos is a mineral found in many rock formations. When separated it becomes a fluffy, fibrous material with many uses. It was used extensively in the construction industry during the 1960s and 1970s for roofing material, ceiling and floor tiles, fire resistant board for doors and partitions, for thermal insulation and commercial and industrial pipe lagging.

In the buildings where it was installed some 40 years ago, when left alone, it does not represent a health hazard, but those buildings are increasingly becoming in need of renovation and modernization. It is in the dismantling and breaking up of these asbestos materials that the health hazard increases. Asbestos is a serious health hazard if the dust is inhaled. The tiny asbestos particles find their way into delicate lung tissue and remain embedded for life, causing constant irritation and, eventually, serious lung disease.

Working with asbestos materials is not a job for anyone in the electrotechnical industry. If asbestos is present in situations or buildings where you are expected to work, it should be removed by a specialist contractor before your work commences. Specialist contractors, who will wear fully protective suits and use breathing apparatus, are the only people who can safely and responsibly carry out the removal of asbestos. They will wrap the asbestos in thick plastic bags and store them temporarily in a covered and locked skip. This material is then disposed of in a special landfill site with other toxic industrial waste materials and the site monitored by the Local Authority for the foreseeable future.

There is a lot of work for electrical contractors in many parts of the country, updating and improving the lighting in government buildings and schools. This work often involves removing the old fluorescent fittings hanging on chains or fixed to beams and installing a suspended ceiling and an appropriate number of recessed modular fluorescent fittings. So what do we do with the old fittings? Well, the fittings are made of sheet steel, a couple of plastic lampholders, a little cable, a starter and ballast. All of these materials can go into the ordinary skip. However, the fluorescent tubes contain a little mercury and fluorescent powder with toxic elements, which cannot be disposed of in the normal landfill sites. The Hazardous Waste Regulations were introduced in July 2005 and under these regulations lamps and tubes are classified as hazardous. While each lamp contains only a small amount of mercury, vast numbers of lamps and tubes are disposed of in the United Kingdom every year, resulting in a significant environmental threat.

The environmentally responsible way to dispose of fluorescent lamps and tubes is to recycle them.

Check your understanding

When you have completed the questions, check out the answers at the back of the book.

Note: more than one multiple choice answer may be correct.

1 A scale drawing which shows the original intention for the position of electrical equipment is called a:
   a. wiring diagram
   b. detail assembly drawing
   c. site plan or layout drawing
   d. as-fitted drawing.

2 The scale drawing which shows the actual position of the electrical equipment upon completion of the contract is called a:
   a. wiring diagram
   b. detail assembly drawing
   c. site plan or layout drawing
   d. as-fitted drawing.

3 A scale drawing showing the position of equipment by graphical symbols is a description of a:
   a. block diagram
   b. site plan or layout diagram
   c. wiring diagram
   d. circuit diagram.

4 A diagram which shows the detailed connections between individual items of equipment is a description of a:
   a. block diagram
   b. site plan or layout diagram
   c. wiring diagram
   d. circuit diagram.

5 A diagram which shows most clearly how a circuit works, with all items represented by graphical symbols is a description of a:
   a. block diagram
   b. site plan or layout diagram
   c. wiring diagram
   d. circuit diagram.

6 A site plan has a scale of 1:100. From the scale drawing you can see that a socket outlet must be positioned on a wall 40 cm from the corner of the room in which you are standing. How far from the corner of the room would

you actually measure to the centre of the socket's fixing position taking the scale into account?

a. 0.4 m
b. 4.0 m
c. 10.0 m
d. 40.0 m.

7 Identify the statutory regulations from the following list:

a. Health and Safety at Work Act 1974
b. BSI Kite Safety Mark
c. Electricity at Work Regulations 1989
d. IEE Regulations BS 7671: 2008.

8 Identify the non-statutory regulations from the following list which impact upon electrotechnical systems:

a. Health and Safety at Work Act 1974
b. Electricity at Work Regulations 1989
c. IEE Regulations BS 7671: 2008
d. BSI Kite Safety Mark.

9 Identify the types of electrical installations to which the IEE Regulations apply from the list below:

a. domestic homes
b. construction sites
c. mines and quarries
d. caravan parks.

10 The person who is the company representative responsible for electrical safety in the work environment is called the:

a. Supervisor
b. Duty of care
c. Duty holder
d. Competent person.

11 Everyone in the workplace has this responsibility for safety:

a. First aid
b. Slips, trips and falls
c. Maintenance of tools and equipment
d. Duty of care.

12 If an Electricity at Work Regulation must be met regardless of cost we say it is:

a. Important
b. Practically impossible
c. Reasonably practicable
d. Absolute.

13 If an Electricity at Work Regulation is to be met *but* time, trouble and difficulty can be taken into account we say it is:

a. Important
b. Practically impossible

c. Reasonably practicable
d. Absolute.

14 Two of the most common categories of risk and causes of accidents at work are:
a. slips, trips and falls
b. put guards around the hazard
c. manual handling
d. use safe systems of work.

15 Two of the most common precautions taken to control risks are:
a. slips, trips and falls
b. put guards around the hazard
c. manual handling
d. use safe systems of work throuit questions.

16 Something which has the potential to cause harm is one definition of:
a. health and safety
b. risk
c. competent person
d. hazard.

17 The chances of harm actually being done is one definition of:
a. electricity
b. risk
c. health and safety
d. hazard.

18 A competent person dealing with a hazardous situation:
a. must wear appropriate PPE
b. display a health and safety poster
c. reduces the risk
d. increases the risk.

19 Employers of companies employing more than five people must:
a. become a member of the NICEIC
b. provide PPE if appropriate
c. carry out a hazard risk assessment
d. display a health and safety poster.

20 There are five parts to a hazard risk assessment procedure. Identify one from the list below:
a. wear appropriate PPE
b. notify the HSE that you intend to carry out a risk assessment
c. list the hazards and who might be harmed
d. substitute a procedure with less risk.

21 Lifting, transporting or supporting heavy objects by hand or bodily force is one definition of:
a. working at height
b. a mobile scaffold tower
c. a sack truck
d. manual handling.

22 When working above ground for long periods of time the most appropriate piece of equipment to use would be:
a. a ladder
b. a trestle scaffold
c. a mobile scaffold tower
d. a pair of sky hooks.

23 The most appropriate piece of equipment to use for gaining access to a permanent scaffold would be:
a. a ladder
b. a trestle scaffold
c. a mobile scaffold tower
d. a pair of sky hooks.

24 The Electricity at Work Regulations tell us that 'we must ensure the disconnection and separation of electrical equipment from every source of supply and the separation must be secure'. A procedure to comply with this regulation is called:
a. work at height
b. a hazard risk assessment
c. a safe isolation procedure
d. a workstation risk assessment.

25 The Electricity at Work Regulations absolutely forbid the following work activity:
a. working at height
b. testing live electrical systems
c. live repair work on electrical circuits
d. working without the appropriate PPE.

26 'Good housekeeping' at work is about:
a. cleaning up and putting waste in the skip
b. working safely
c. making the tea and collecting everyone's lunch
d. putting tools and equipment away after use.

27 Which hand tools would you use for terminating conductors in a junction box?
a. a pair of side cutters or knife
b. a screwdriver
c. a wood chisel and saw
d. a tenon saw.

28 Which hand tools would you use for removing cable insulation?
a. a pair of side cutters or knife
b. a screwdriver
c. a wood chisel and saw.
d. a tenon saw.

29 Which hand tools would you use to cut across a floorboard before lifting?
a. a pair of side cutters or knife
b. a screwdriver

c. a wood chisel and saw
d. a tenon saw.

30 Which hand tools would you use to cut and remove a notch in a floor joist?
a. a pair of side cutters or knife
b. a screwdriver
c. a wood chisel and saw
d. a tenon saw.

31 PAT testing is carried out on:
a. hand tools
b. domestic appliances only
c. work electrical tools
d. electrical equipment e.g. 110 V transformers.

32 When PAT testing a 110 V electric drill we are testing the:
a. efficiency of the drill
b. earth continuity of the drill
c. hammer action of the drill
d. insulation resistance of the drill.

33 An electrical cable is made up of three parts which are:
a. conduction, convection and radiation
b. conductor, insulation and outer sheath
c. heating, magnetic and chemical
d. conductors and insulators.

34 An appropriate wiring method for a domestic installation would be a:
a. metal conduit installation
b. trunking and tray installation
c. PVC cables
d. PVC/SWA cables.

35 An appropriate wiring method for an underground feed to a remote building would be a:
a. metal conduit installation
b. trunking and tray installation
c. PVC cables
d. PVC/SWA cables.

36 An appropriate wiring method for a high-temperature installation in a boiler house is:
a. metal conduit installation
b. trunking and tray installation
c. FP200 cables
d. MI cables.

37 The cables suspended from the transmission towers of the national grid network are made from:
a. copper and brass
b. copper with PVC insulation
c. aluminium and steel
d. aluminium and porcelain.

38 An appropriate wiring system for a three-phase industrial installation would be:
   a. PVC cables
   b. PVC conduit
   c. one which meets the requirements of Part 2 of the IEE Regulations
   d. one which meets the requirements of Part 5 of the IEE Regulations.

39 A PVC insulated and sheathed wiring system would be suitable for the following type of installation:
   a. commercial
   b. domestic
   c. horticultural
   d. industrial.

40 A PVC conduit installation would be suitable for the following type of installation:
   a. commercial
   b. domestic
   c. horticultural
   d. industrial.

41 A steel conduit installation would be suitable for the following type of installation:
   a. commercial
   b. domestic
   c. horticultural
   d. industrial.

42 A steel trunking installation would be suitable for the following type of installation:
   a. commercial
   b. domestic
   c. horticultural
   d. industrial.

43 Which of the following fixing methods would be suitable for holding a lightweight load on a plasterboard partition?
   a. cable clip
   b. Rawlbolt
   c. screw fixing to plastic plug
   d. spring toggle.

44 Which of the following fixing methods would be suitable for holding a medium weight load on to a brick wall?
   a. cable clip
   b. Rawlbolt
   c. screw fixing to plastic plug
   d. spring toggle.

45 Which of the following fixing methods would be suitable for holding a PVC insulated and sheathed cable on to a wood surface such as a ceiling joist?
   a. cable clip
   b. Rawlbolt

c. screw fixing to plastic plug
d. spring toggle.

46 Which of the following fixing methods would be suitable for securing a heavy electric motor to a concrete bed?
a. cable clip
b. Rawlbolt
c. screw fixing to plastic plug
d. spring toggle.

47 Sketch a site plan or layout drawing for the room which you normally use at college and indicate the position of all the electrical accessories in the room using BS EN 60617 symbols.

48 What methods could you use to find and store some information about?
- Health and safety at work
- British Standards
- Electrical accessories and equipment.

49 What method would you use to let the office know that the materials you were expecting have not yet arrived?

50 What method would you use to send a long list of materials required for the job you are on to the wholesalers for later delivery to the site? Use bullet points.

51 What are the advantages and disadvantages of having sources of technical information on:
a. some form of electronic storage system such as a CD, DVD or USB memory stick or
b. hard copy such as a catalogue, drawings or On Site Guide.
Would it make a difference if you were at the office or on a construction site?

52 State the advantages and disadvantages of:
a. telephone messages
b. written messages.

53 List at least two statutory regulations which have an impact upon all electrotechnical activities and state your reasons why.

54 List at least one code of practice which has an impact upon all electrotechnical activities and state the reason why.

55 List seven sections within the IEE Regulations which have an impact upon electrical safety in buildings.

56 List six types of building or situation to which the IEE Regulations alone will apply.

57 List two types of installation or situation to which the IEE Regulations alone will not apply because the installation or situation is considered to be too dangerous.

58 List five common categories of risk.

59 List five common precautions which might be taken to control risk.

60 Use bullet points to list the main stages involved in lifting a heavy box from the floor, carrying it across a room and placing it on a worktop, using a safe manual handling technique.

61 Describe a safe manual handling technique for moving a heavy electric motor out of the stores, across a yard and into the back of a van for delivery to site.

62 Use bullet points to list a step-by-step safe electrical isolation procedure for isolating a circuit in a three-phase distribution fuse board.

63 Use bullet points to list each stage in the erection and securing of a long extension ladder. Identify all actions which would make the ladder safe to use.

64 Describe how you would use a mobile scaffold tower to re-lamp all the light fittings in a supermarket. Use bullet points to give a step-by-step account of re-lamping the first two fittings.

65 What is a proving unit used for?

66 The HSE Guidance Note GS 38 tells us about suitable test probe leads. Use a sketch to identify the main recommendations.

67 State how you would deal with the following materials when you are cleaning up at the end of the job:
- pieces of conduit and tray
- cardboard packaging material
- empty cable rolls
- half full cable rolls
- bending machines for conduit and tray
- your own box of tools
- your employer's power tools
- 100 old fluorescent light fittings
- 200 used fluorescent tubes.

68 For each type of tool shown in Figs 5.17 to 5.21, name the tool or piece of equipment and state one application (what you would use it for) for each.

69 Describe 'good practice' when handling and storing hand and power tools.

70 State five points that a PAT inspection and test checks on each appliance.

71 State what you would do with electrical tools on site when you have finished using them in order to make sure:
a. they remain in good condition
b. they are available the next time you want to use them.

72 Briefly describe that we mean by 'good housekeeping' on site.

73 State some of the actions that you could take at work that would make the work environment safer and that could be considered 'good housekeeping'.

74 Slips, trips and falls are the most common cause of accidents at work. What can you do at work to reduce the possibility of an accident being caused by a slip, trip or fall?

75 State the advantages of a conduit trunking and tray cable enclosure system for a commercial installation such as a shopping centre.

76 Compare PVC/SWA cables with MI cables and give their advantages, disadvantages and typical applications.

77 Use a sketch with notes of explanation to show how mini-trunking and skirting trunking could be used to contain all the electrical supplies in a school's computing classroom.

78 Explain the meaning of 'segregation' of circuits.

79 Use a sketch with notes of explanation to show how trunking and tray may be suspended from the girders of a building structure by appropriate brackets.

80 Use bullet points to describe a safe isolation procedure.

81 Who can carry out live testing?
Why is live working not allowed?

CHAPTER 6

Termination and connection of conductors and cables

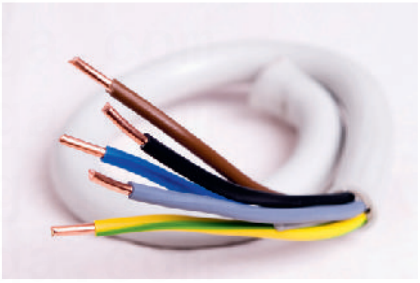

Unit 306 of the City and Guilds 2357 syllabus

Understanding the principles, practices and legislation for the termination and connection of conductors, cables and cords in electrical systems.

Online Material WWW

This chapter has free associated content, including animations and instructional videos, to support your learning

When you see the logo, visit the website below to access this material:

www.elsevierdirect.com/companions/9780080966281

Communications

When we talk about good communications we are talking about transferring information from one person to another both quickly and accurately. We do this by talking to other people, looking at drawings and plans and discussing these with colleagues from the same company and with other professionals who have an interest in the same project. The technical information used within our industry comes from many sources. The IEE Regulations (BS 7671) is the 'electrician's bible' and forms the basis of all our electrical design calculations and installation methods. British Standards, European Harmonised Standards and Codes of Practice provide detailed information for every sector of the electrotechnical industry, influencing all design and build considerations.

Sources of technical information

The equipment and accessories available to use in a specific situation can often be found in the very comprehensive manufacturer's catalogues and the catalogues of the major wholesalers that service the electrotechnical industries.

All of this technical information may be distributed and retrieved by using:

- conventional drawings and diagrams which we will look at in more detail below

Basic Electrical Installation Work. 978-0-08-096628-1

- sketch drawing to illustrate an idea or the shape of say a bracket to hold a piece of electrical equipment
- the Internet can be used to download British Standards and Codes of Practice
- the Internet can also be used to download health and safety information from the health and safety executive at: www.gov.uk/hseor%20www.opsi.gov.uk
- CDs, DVDs, USB memory sticks and email can be used to communicate and store information electronically
- the facsimile (Fax) machine can be used to communicate with other busy professionals, information say about a project you are working on together.

If you are working at your company office with access to online computers, then technical information is only a fingertip or mouse click away. However, a construction site is a hostile environment for a laptop and so a hard copy of any data is preferable on site.

Let us now look at the types of drawings and diagrams which we use within our industry to communicate technical information and connection of conductors for the installation, termination between colleagues and other professionals. The type of diagram to be used in any particular situation is the one which most clearly communicates the desired information.

Drawings and diagrams

So that the electrician will know where to install the sockets, lights and equipment he will probably be provided with a site plan or layout drawing by the architect or main contractor.

Site plans or layout drawings

These are scale drawings based upon the architect's site plan of the building and show the position of the electrical equipment which is to be installed. The electrical equipment is identified by a graphical symbol. The standard symbols used by the electrical contracting industry are those recommended by the British Standard EN 60617, *Graphical Symbols for Electrical Power, Telecommunications and Electronic Diagrams*. Some of the more common electrical installation symbols are given in Fig. 6.1.

The site plan or layout drawing will be drawn to a scale, smaller than the actual size of the building, so to find the actual measurement, you must measure the distance on the drawing and multiply by the scale.

For example, if the site plan is drawn to a scale of 1:100, then 10 mm on the site plan represents 1 m measured in the building.

The layout drawing or site plan of a small domestic extension is shown in Fig. 6.2. It can be seen that the mains intake position, probably a consumer unit, is situated in the storeroom which also contains one light controlled by a switch at the door. The bathroom contains one lighting point controlled by a one-way pull switch at the door. The kitchen has two doors and a switch is installed at each door to control the fluorescent luminaire. There are also three double sockets situated around the kitchen. The sitting room has a two-way switch at each door controlling the centre lighting point. Two wall lights with built-in switches are to be wired, one at each side of the window. Two double sockets and one switched socket are also to be installed in the sitting room. The bedroom has two lighting points controlled independently by two one-way switches at the door. The wiring diagrams and installation procedures for all these circuits can be found later chapters.

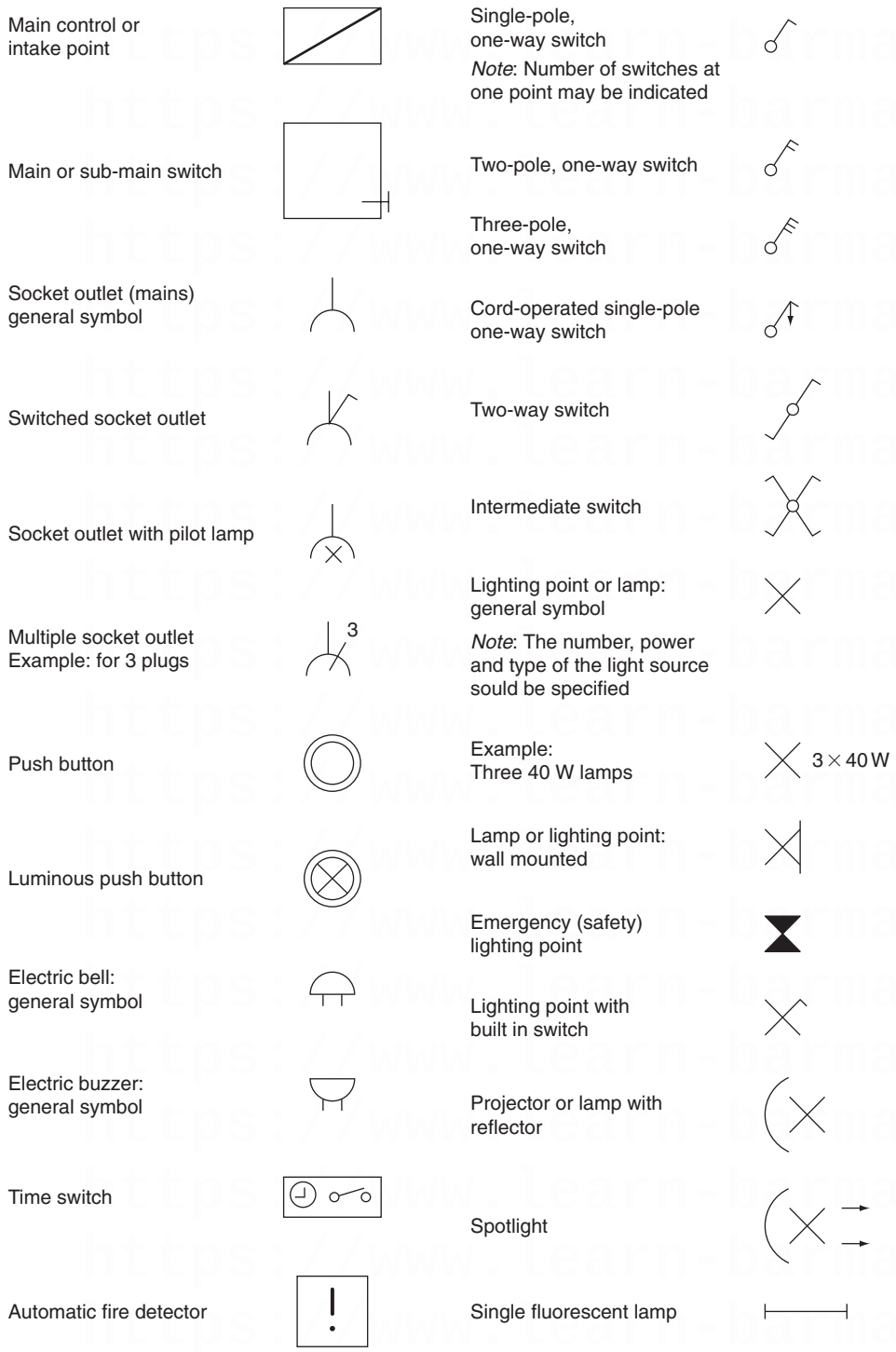

Figure 6.1 Some BS EN 60617 electrical installation symbols.

Try this

Drawing

The next time you are on site ask your supervisor to show you the site plans. Ask him:

- how does the scale work
- put names to the equipment represented by British Standard symbols.

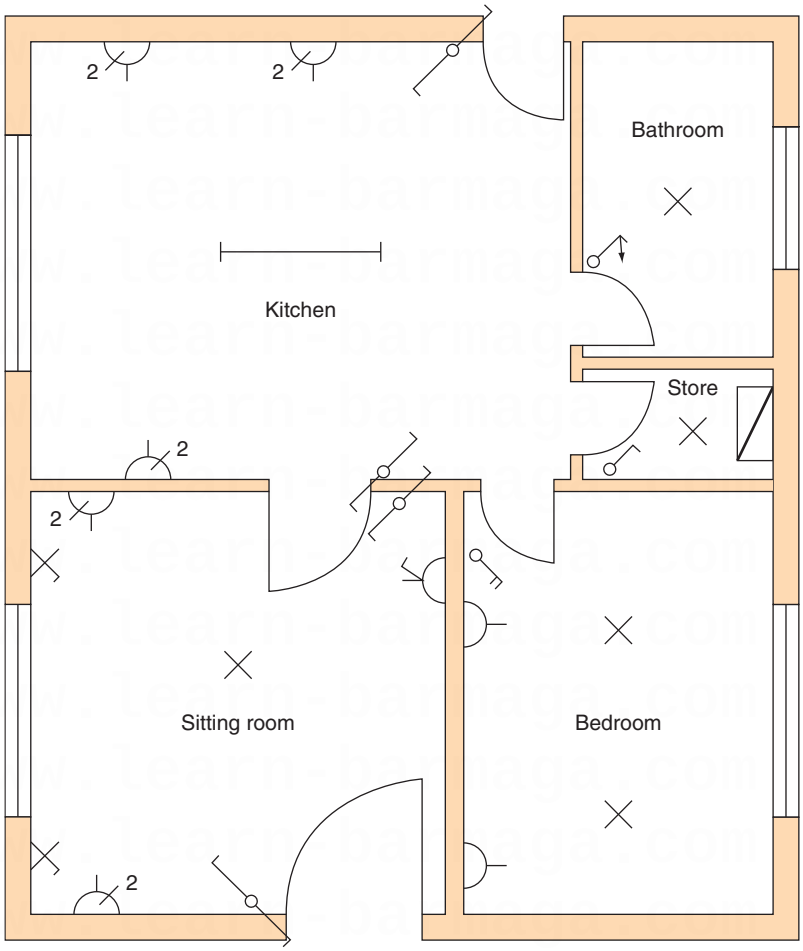

Figure 6.2 Layout drawing or site plan of a small electrical installation.

As-fitted drawings

When the installation is completed a set of drawings should be produced which indicate the final positions of all the electrical equipment. As the building and electrical installation progresses, it is sometimes necessary to modify the positions of equipment indicated on the layout drawing because, for example, the position of a doorway has been changed. The layout drawings or site plans indicate the original intentions for the position of equipment, while the 'as-fitted' drawing indicates the actual positions of equipment upon completion of the contract.

Try this

Drawings

Take a moment to clarify the difference between:

- layout drawings and
- as-fitted drawings.

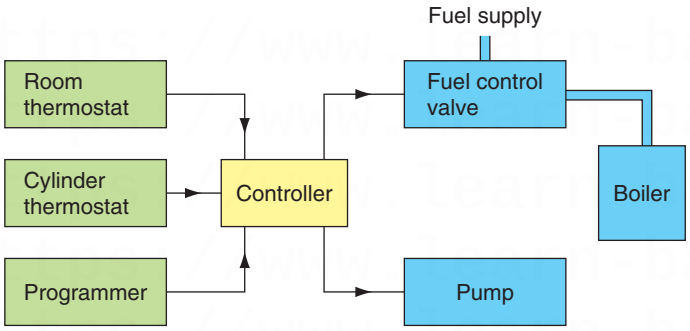

Figure 6.3 Block diagram – space heating control system (Honeywell Y. Plan).

Detail drawings and assembly drawings

These are additional drawings produced by the architect to clarify some point of detail. For example, a drawing might be produced to give a fuller description of a suspended ceiling arrangement or the assembly arrangements of the metalwork for the suspended ceiling.

Location drawings

Location drawings identify the place where something is located. It might be the position of the manhole covers giving access to the drains. It might be the position of all water stop taps or the position of the emergency lighting fittings. This type of information may be placed on a blank copy of the architect's site plan or on a supplementary drawing.

Distribution cable route plans

On large installations there may be more than one position for the electrical supplies. Distribution cables may radiate from the site of the electrical mains intake position to other sub-mains positions. The site of the sub-mains and the route taken by the distribution cables may be shown on a blank copy of the architect's site plan or on the electricians 'as-fitted' drawings.

Block diagrams

A block diagram is a very simple diagram in which the various items or pieces of equipment are represented by a square or rectangular box. The purpose of the block diagram is to show how the components of the circuit relate to each other and, therefore, the individual circuit connections are not shown. Figure 6.3 shows the block diagram of a space heating control system.

Wiring diagrams

A wiring diagram or connection diagram shows the detailed connections between components or items of equipment. They do not indicate how a piece of equipment or circuit works. The purpose of a wiring diagram is to help someone

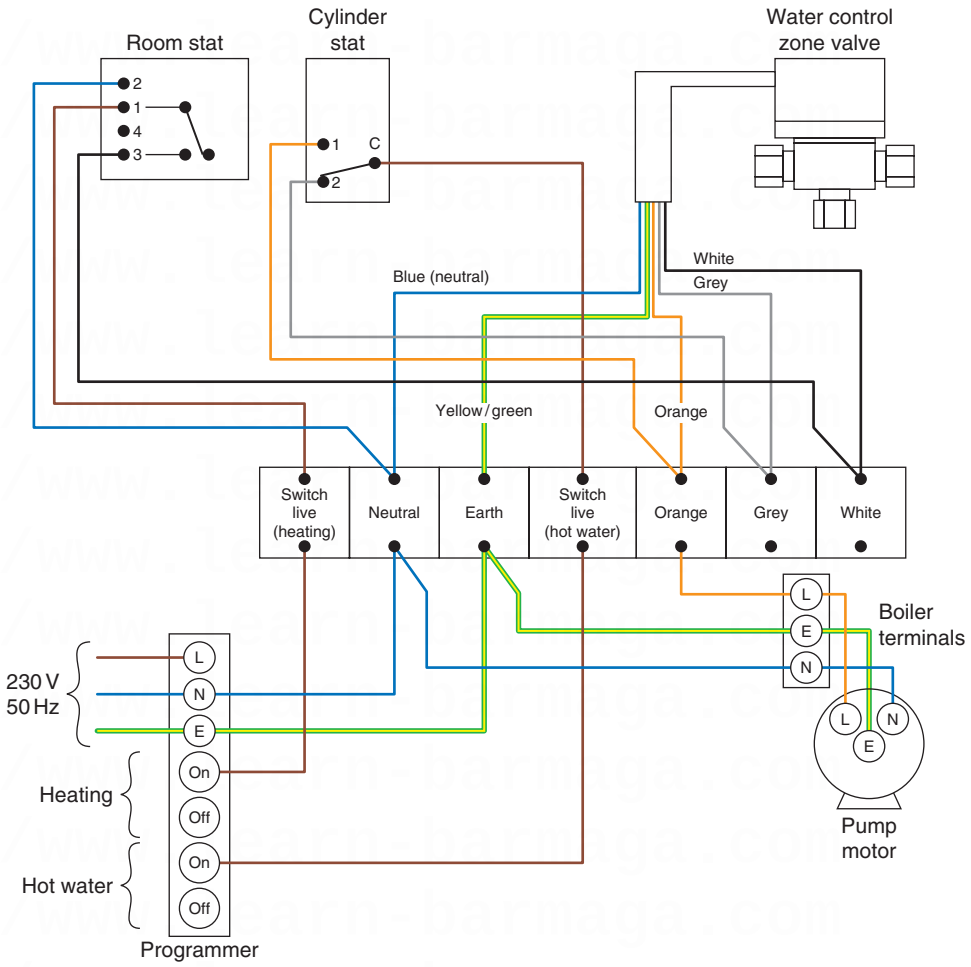

Figure 6.4 Wiring diagram – space heating control system (Honeywell Y. Plan).

with the actual connection of the circuit conductors. Figure 6.4 shows the wiring diagram for a space heating control system and Fig. 6.5 the wiring diagram for a two-way switch control of a light.

Circuit diagrams

A circuit diagram shows most clearly how a circuit works. All the essential parts and connections are represented by their graphical symbols. The purpose of a circuit diagram is to help our understanding of the circuit. It will be laid out as clearly as possible, without regard to the physical layout of the actual components and, therefore, it may not indicate the most convenient way to wire the circuit. Figure 6.6 shows the circuit diagram of our same space heating control system.

Schematic diagrams

A schematic diagram is a diagram in outline of, for example, a motor starter circuit. It uses graphical symbols to indicate the interrelationship of the electrical elements in a circuit. These help us to understand the working operation of the circuit but are not helpful in showing us how to wire the components.

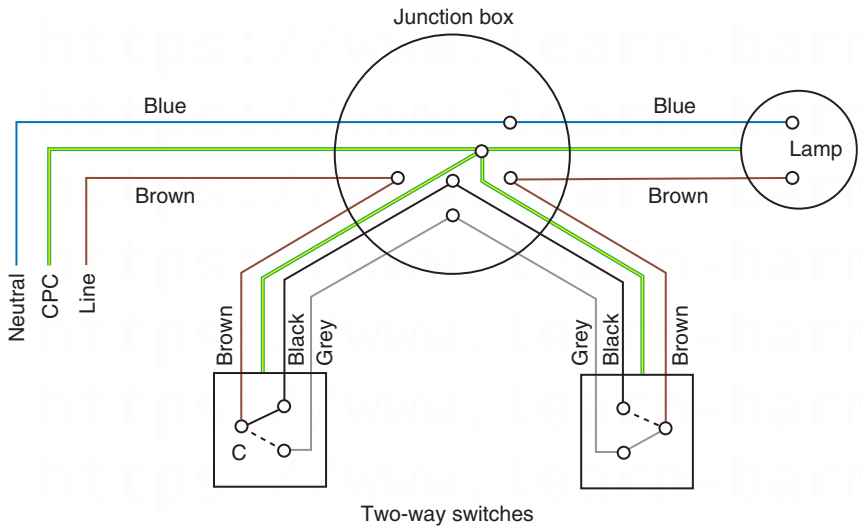

Figure 6.5 Wiring diagram of two-way switch control.

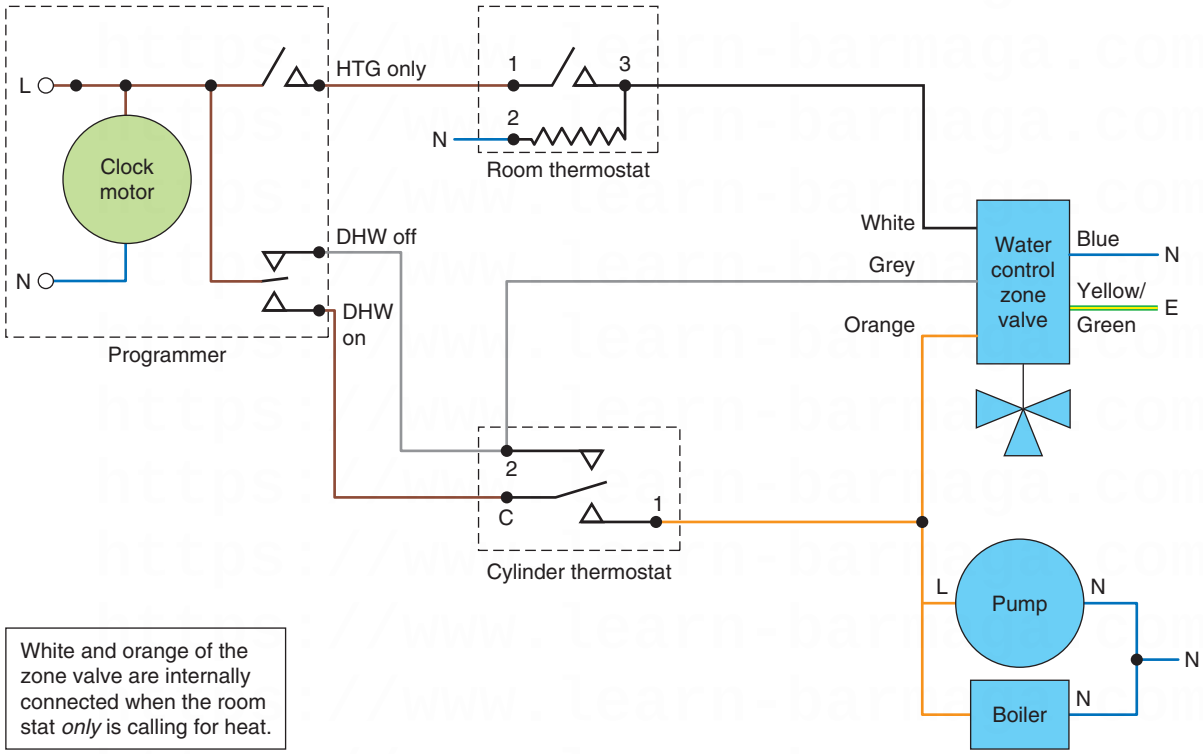

Figure 6.6 Circuit diagram – space heating control system (Honey Well Y. Plan).

An electrical schematic diagram looks very like a circuit diagram. Figure 6.7 shows a schematic diagram.

Freehand working diagrams

Freehand working drawings or sketches are another important way in which we communicate our ideas. The drawings of the spring toggle bolt in Chapter 5 (Fig. 5.46) were done from freehand sketches. A freehand sketch may be done as

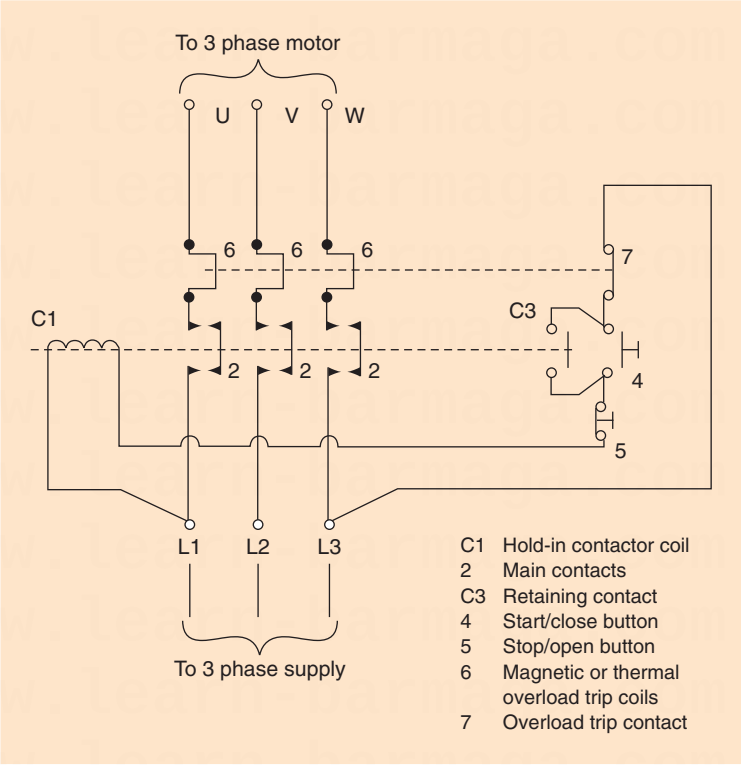

Figure 6.7 Schematic diagram – DOL motor starter.

an initial draft of an idea before a full working drawing is made. It is often much easier to produce a sketch of your ideas or intentions than to describe them or produce a list of instructions.

To convey the message or information clearly it is better to make your sketch large rather than too small. It should also contain all the dimensions necessary to indicate clearly the size of the finished object depicted by the sketch.

All drawings and communications must be aimed at satisfying the client's wishes for the project. It is the client who will pay the final bill which, in turn, pays your wages. The detailed arrangements of what must be done to meet the client's wishes are contained in the client's specification documents and all your company's efforts must be directed at meeting the whole specification, but no more.

Wiring systems and enclosures

The final choice of a wiring system must rest with those designing the installation and those ordering the work, but whatever system is employed, good workmanship by competent persons and the use of proper materials is essential for compliance with the Regulations (IEE Regulation 134.1.1). The necessary skills can be acquired by an electrical trainee who has the correct attitude and dedication to his craft.

Table 1A in Appendix 1 of the *On Site Guide* deals with the assumed current demand of points, and states that for lighting outlets we should assume a current equivalent to a minimum of 100 W per lampholder. This means that for a domestic lighting circuit rated at 5 A, a maximum of 11 lighting outlets could

be connected to each circuit. In practice, it is usual to divide the fixed lighting outlets into a convenient number of circuits of seven or eight outlets each. In this way the whole installation is not plunged into darkness if one lighting circuit fuses and complies with Regulation 314.1 which tells us to 'divide into circuits to minimize inconvenience and avoid danger'.

Lighting circuits are usually wired in 1.0 or 1.5 mm cable using either a loop-in or joint-box method of installation. The loop-in method is universally employed with conduit installations or when access from above or below is prohibited after installation, as is the case with some industrial installations or blocks of flats. In this method the only joints are at the switches or lighting points, the live conductors being looped from switch to switch and the neutrals from one lighting point to another.

The use of junction boxes with fixed brass terminals is the method often adopted in domestic installations, since the joint boxes can be made accessible but are out of site in the loft area and under floorboards. However, every connection must remain accessible for inspection, testing and maintenance (IEE Regulation 526.3).

The live conductors must be broken at the switch position in order to comply with the polarity regulations 612.7. A ceiling rose may only be connected to installations operating at 250 V maximum and must only accommodate one flexible cord unless it is specially designed to take more than one (IEE Regulations 559.6.1.2 and 559.6.1.3). Lampholders suspended from flexible cords must be capable of suspending the mass of the luminaire fixed to the lampholder (IEE Regulation 559.6.1.5).

The method of fixing must be capable of carrying a mass of not less than 5 kg. Suspended ceilings are considered to be 'stable' or firmly fixed and may, therefore, support luminaires.

A luminaire, that is a light fitting or small spot light, must be fixed at an adequate distance from combustible material, or as recommended by the manufacturer, or be enclosed in non-flammable material (IEE Regulations 422.3.1, 422.3.8, 422.4.4 and 559.5.1).

The type of circuit and wiring system used will depend upon the installation conditions and the customer's requirements.

Safety first

Fire

- Mini-spots get hot in use
- Cutting a hole in a ceiling may compromise the fire integrity of the room
- Fix spots away from combustible material
- Follow manufacturers' fitting instructions
- Consider installing fire hoods.

Terminating and connecting conductors

The entry of a cable end into an accessory, enclosure or piece of equipment is what we call a termination. Section 526 of the IEE Regulations tells us that:

1. every connection between conductors and equipment shall be durable, provide electrical continuity and mechanical strength and protection.
2. every termination and joint in a live conductor shall be made within a suitable accessory, piece of equipment or enclosure that complies with the appropriate product standard.
3. every connection shall be accessible for inspection, testing and maintenance.
4. the means of connection shall take account of the number and shape of the wires forming the conductor.
5. the connection shall take account of the cross-section of the conductor and the number of conductors to be connected.
6. the means of connection shall take account of the temperature attained in normal service.
7. there must be no mechanical strain on the conductor connections.

Definition

The entry of a cable end into an accessory, enclosure or piece of equipment is what we call a *termination*.

There is a wide range of suitable means of connecting conductors and we shall look at these in a moment. Whatever method is used to connect live conductors, the connection must be contained in an enclosed compartment such as an accessory; for example, a switch or socket box or a junction box. Alternatively, an equipment enclosure may be used; for example, a motor enclosure or an enclosure partly formed by non-combustible building material (IEE Regulation 526.5). This is because faulty joints and terminations in live conductors can attain very high temperatures due to the effects of resistive heating. They might also emit arcs, sparks or hot particles with the consequent risk of fire or other harmful thermal effects to adjacent materials.

Types of terminal connection

Junction boxes

Key fact

Junction boxes are probably the most popular method of making connections in domestic properties.

Junction boxes are probably the most popular method of making connections in domestic properties. Brass terminals are fixed inside a bakelite container. The two important factors to consider when choosing a junction box are the number of terminals required and the current rating. Socket outlet junction boxes have larger brass terminals than lighting junction boxes.

Strip connectors

Key fact

Strip connectors or a chocolate block is a very common method of connecting conductors.

Strip connectors or a chocolate block is a very common method of connecting conductors. The connectors are mounted in a moulded plastic block in strips of 10 or 12. The conductors are inserted into the block and secured with the grub-screw. In order that the conductors do not become damaged, the screw connection must be firm but not overtightened. The size used should relate to the current rating of the circuit. Figure 6.8 shows a strip connector.

Pillar terminal

A pillar terminal is a brass pillar with a hole through the side into which the conductor is inserted and secured with a set-screw. If the conductor is small in relation to the hole it should be doubled back. In order that the conductor does not become damaged, the screw connection should be tight but not overtightened. Figure 6.8 shows a pillar terminal.

Screwhead, nut and washer terminals

The conductor being terminated is formed into an eye as shown in Fig. 6.8. The eye should be slightly larger than the screw shank but smaller than the outside diameter of the screwhead, nut or washer. The eye should be placed on the screw shank in such a way that the rotation of the screwhead or nut will tend to close the joint in the eye.

Claw washers

In order to avoid inappropriate separation or spreading of individual wires of multiwire, claw washers are used to obtain a good sound connection. The looped conductor is laid in the pressing as shown in Fig. 6.8, a plain washer is placed on top of the conductor and the metal points folded over the washer.

Crimp terminals

Crimp terminals are made of tinned sheet copper. The chosen crimp terminal is slipped over the end of the conductor and crimped with the special crimping tool. This type of connection is very effective for connecting equipotential bonding conductors to approved earth clamps.

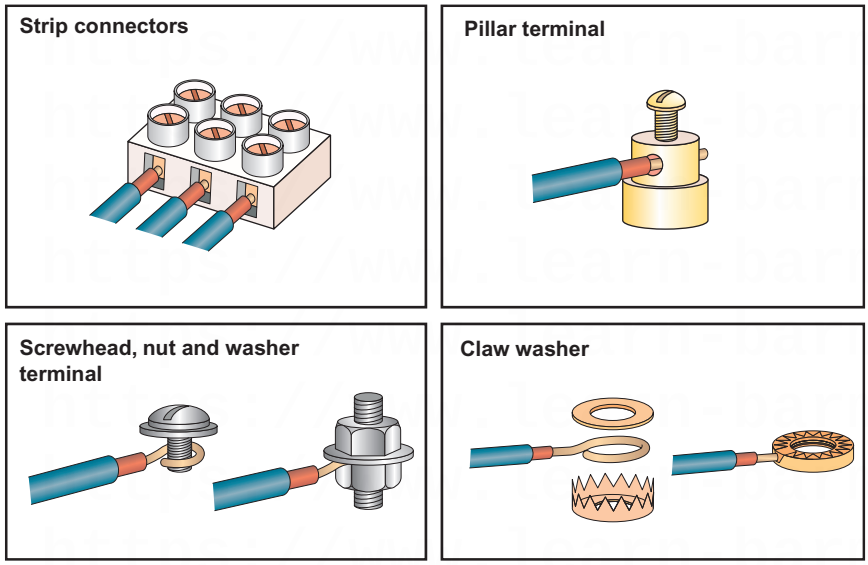

Figure 6.8 Types of terminal.

Soldered joints or compression joints

Although the soldering of large underground cables is still common today, joints up to about 100 A are now usually joined with a compression joint. This uses the same principle as for the crimp termination above, it is just a little larger.

Whatever method is used to make the connection in conductors, the connection must be both electrically and mechanically sound if we are to avoid high resistance joints, corrosion and erosion at the point of termination.

Key fact

Whatever method is used to make the connection in conductors, the connection must be both electrically and mechanically sound if we are to avoid high resistance joints, corrosion and erosion at the point of termination.

PVC insulated and sheathed cable installations

PVC insulated and sheathed wiring systems are used extensively for lighting and socket installations in domestic dwellings. Mechanical damage to the cable caused by impact, abrasion, penetration, compression or tension must be minimized during installation (Regulation 522.6.1). The cables are generally fixed using plastic clips incorporating a masonry nail, which means the cables can be fixed to wood, plaster or brick with almost equal ease. Cables should be run horizontally or vertically, not diagonally, down a wall. All kinks should be removed so that the cable is run straight and neatly between clips fixed at equal distances providing adequate support for the cable so that it does not become damaged by its own weight (Regulation 522.8.4 and Table 4A of the *On Site Guide*). Table 4A of the IEE *On Site Guide* is shown in Table 6.1. Where cables are bent, the radius of the bend should not cause the conductors to be damaged (Regulation 522.8.3 and Table 4E of the *On Site Guide*).

Terminations or joints in the cable may be made in ceiling roses, junction boxes, or behind sockets or switches, provided that they are enclosed in a non-ignitable material, are properly insulated and are mechanically and electrically secure (IEE Regulation 526). All joints must be accessible for inspection testing and maintenance when the installation is completed (IEE Regulation 526.3).

Where PVC insulated and sheathed cables are concealed in walls, floors or partitions, they must be provided with a box incorporating an earth terminal at each outlet position. PVC cables do not react chemically with plaster, as do some cables, and consequently PVC cables may be buried under plaster. Further

Table 6.1 Spacing of Cable Supports. Adapted from the IEE *On Site Guide* by Kind Permission of the Institution of Electrical Engineers

Spacings of supports for cables in accessible positions								
Overall diameter of cable* (mm)	Maximum spacings of clips							
	Non-armoured thermosetting, thermoplastic or lead sheathed cables				Armoured cables		Mineral insulated copper sheathed or aluminium sheathed cables	
	Generally		In caravans					
	Horizontal** (mm)	Vertical** (mm)	Horizontal** (mm)	Vertical** (mm)	Horizontal** (mm)	Vertical** (mm)	Horizontal** (mm)	Vertical** (mm)
1	2	3	4	5	6	7	8	9
Not exceeding 9	250	400			–	–	600	800
Exceeding 9 and not exceeding 15	300	400	250 (for all sizes)	400 (for all sizes)	350	450	900	1200
Exceeding 15 and not exceeding 20	350	450			400	550	1500	2000
Exceeding 20 and not exceeding 40	400	550			450	600	–	–

Note: For the spacing of supports for cables having an overall diameter exceeding 40 mm, and for single-core cables having conductors of cross-sectional area 300 mm^2 and larger, the manufacturer's recommendations should be observed.
*For flat cables taken as the dimension of the major axis.
**The spacings stated for horizontal runs may be applied also to runs at an angle of more than 30 from the vertical. For runs at an angle of 30° or less from the vertical, the vertical spacings are applicable.

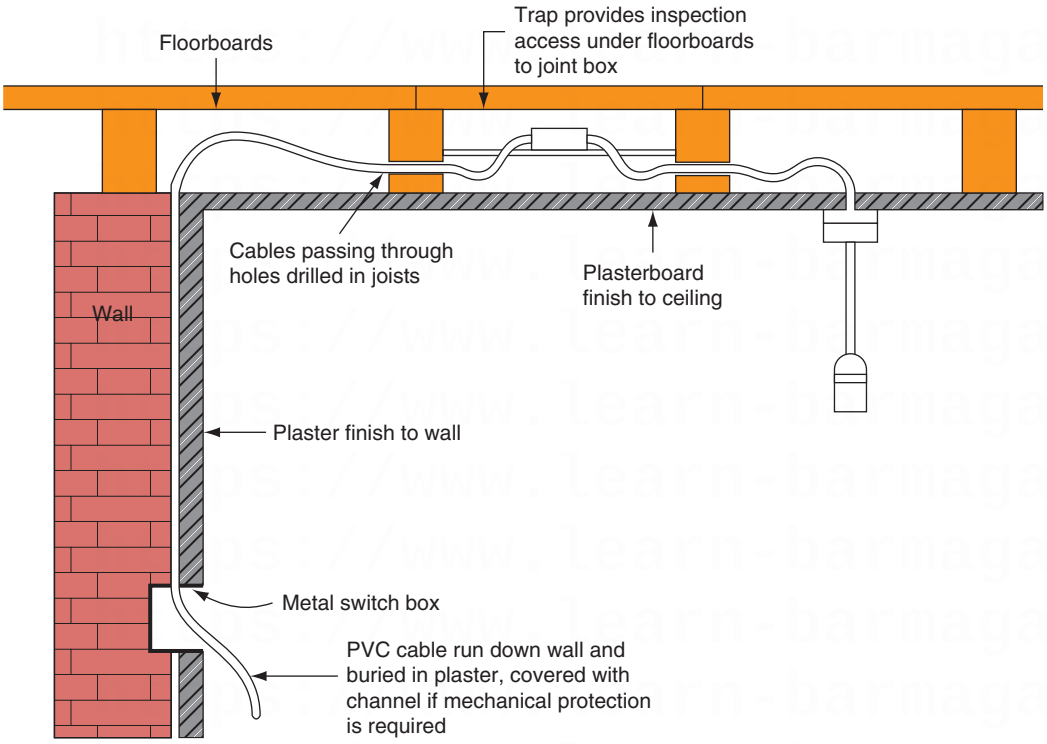

Figure 6.9 A concealed PVC sheathed wiring system.

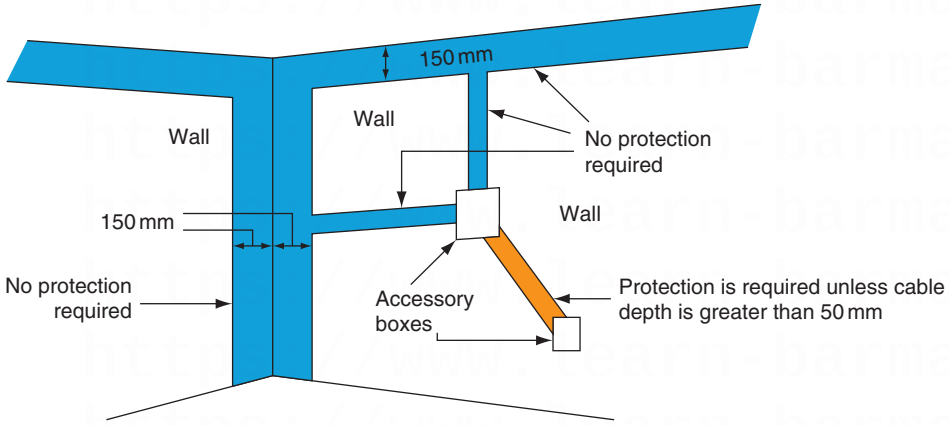

Figure 6.10 Permitted cable routes.

protection by channel or conduit is only necessary if mechanical protection from nails or screws is required or to protect them from the plasterer's trowel. However, Regulation 522.6.6 now tells us that where PVC cables are to be embedded in a wall or partition at a depth of less than 50 mm they should be run along one of the permitted routes shown in Fig. 6.10. Figure 6.9 shows a typical PVC installation. To identify the most probable cable routes, Regulation 522.6.6 tells us that outside a zone formed by a 150 mm border all around a wall edge, cables can only be run horizontally or vertically to a point or accessory unless they are contained in a substantial earthed enclosure, such as a conduit, which can withstand nail penetration, as shown in Fig. 6.10.

Where the accessory or cable is fixed to a wall which is less than 100 mm thick, protection must also be extended to the reverse side of the wall if a position can be determined.

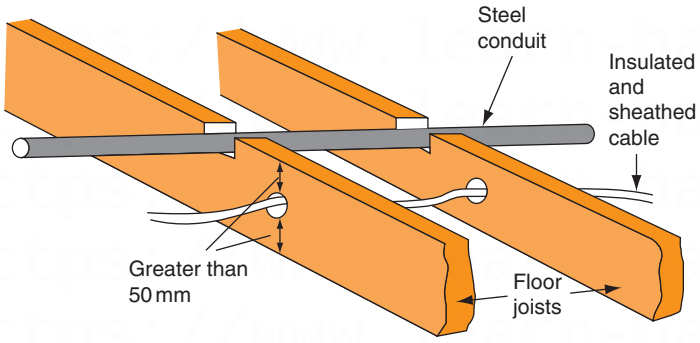

Notes:

1. Maximum diameter of hole should be 0.25 × joist depth.
2. Holes on centre line in a zone between 0.25 and 0.4 × span.
3. Maximum depth of notch should be 0.125 × joist depth.
4. Notches on top in a zone between 0.1 and 0.25 × span.
5. Holes in the same joist should be at least 3 diameters apart.

Figure 6.11 Correct installation of cables in floor joists.

Where none of this protection can be complied with and the installation is to be used by ordinary people, then the cable must be given additional protection with a 30 mA RCD (IEE Regulation 522.6.7).

Where cables pass through walls, floors and ceilings the hole should be made good with incombustible material such as mortar or plaster to prevent the spread of fire (Regulations 527.1.2 and 527.2.1). Cables passing through metal boxes should be bushed with a rubber grommet to prevent abrasion of the cable. Holes drilled in floor joists through which cables are run should be 50 mm below the top or 50 mm above the bottom of the joist to prevent damage to the cable by nail penetration (Regulation 522.6.5), as shown in Fig. 6.11. PVC cables should not be installed when the surrounding temperature is below 0°C or when the cable temperature has been below 0°C for the previous 24 h because the insulation becomes brittle at low temperatures and may be damaged during installation.

Try this

Definitions

In the margin write down a short definition of a 'competent person'.

Electrical cables

In Chapters 9 we look at the science behind conductors and insulators. In this chapter, we will look at a practical application for that science, electrical cables.

Most cables can be considered to be constructed in three parts: the **conductor** which must be of a suitable cross-section to carry the load current; the **insulation**, which has a colour or number code for identification; and the **outer sheath** which may contain some means of providing protection from mechanical damage.

Definition

Cables can be considered to be constructed in three parts: the *conductor* which must be of a suitable cross-section to carry the load current; the *insulation*, which has a colour or number code for identification; and the *outer sheath* which may contain some means of providing protection from mechanical damage.

The conductors of a cable are made of either copper or aluminium and may be stranded or solid. Solid conductors are only used in fixed wiring installations and may be shaped in larger cables. Stranded conductors are more flexible and conductor sizes from 4.0 to 25 mm^2 contain seven strands. A 10 mm^2 conductor, for example, has seven 1.35 mm diameter strands which collectively make up the 10 mm^2 cross-sectional area of the cable. Conductors above 25 mm^2 have more than seven strands, depending upon the size of the cable. Flexible cords have multiple strands of very fine wire, as fine as one strand of human hair. This gives the cable its very flexible quality.

New wiring colours

Twenty-eight years ago the United Kingdom agreed to adopt the European colour code for flexible cords, that is, brown for live or phase conductor, blue for the neutral conductor and green combined with yellow for earth conductors. However, no similar harmonization was proposed for non-flexible cables used for fixed wiring. These were to remain as red for live or phase conductor, black for the neutral conductor and green combined with yellow for earth conductors.

On 31 March 2004, the IEE published Amendment No. 2 to BS 7671: 2001 which specified new cable core colours for all fixed wiring in UK electrical installations. These new core colours will 'harmonize' the United Kingdom with the practice in mainland Europe.

Fixed cable core colours up to 2006

- *Single-phase* supplies red line conductors, black neutral conductors, and green combined with yellow for earth conductors.
- *Three-Phase* supplies red, yellow and blue line conductors, black neutral conductors and green combined with yellow for earth conductors.

These core colours must not be used after 31 March 2006.

New (harmonized) fixed cable core colours

- *Single-phase* supplies brown line conductors, blue neutral conductors and green combined with yellow for earth conductors (just like flexible cords).
- *Three-phase* supplies brown, black and grey line conductors, blue neutral conductors and green combined with yellow for earth conductors.

Cable core colours from 31st of March 2004 onwards.

Extensions or alterations to existing *single-phase* installations do not require marking at the interface between the old and new fixed wiring colours. However, a warning notice must be fixed at the consumer unit or distribution fuse board which states:

> *Caution – this installation has wiring colours to two versions of BS 7671. Great care should be taken before undertaking extensions, alterations or repair that all conductors are correctly identified.*

Alterations to *three-phase* installations must be marked at the interface L1, L2, L3 for the lines and N for the neutral. Both new and old cables must be marked. These markings are preferred to coloured tape and a caution notice is again required at the distribution board. Appendix 7 of BS 7671: 2008 deals with harmonized cable core colours.

Safety first

PVC cables

- PVC cables should not be installed when the surrounding temperature is below 0°C.
- The PVC insulation becomes brittle at low temperatures and may be damaged during installation.
- IEE Regulation 522.1.2.

PVC insulated and sheathed cables

Domestic and commercial installations use this cable, which may be clipped direct to a surface, sunk in plaster or installed in conduit or trunking. It is the simplest and least expensive cable. Figure 6.12 shows a sketch of a twin and earth cable.

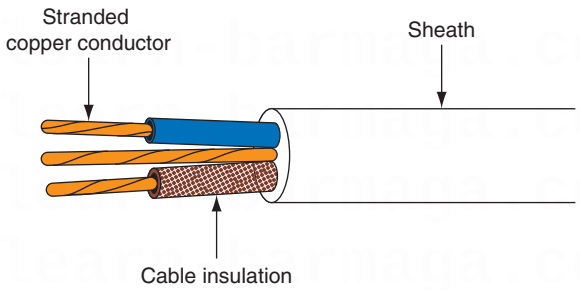

Figure 6.12 A twin and earth PVC insulated and sheathed cable.

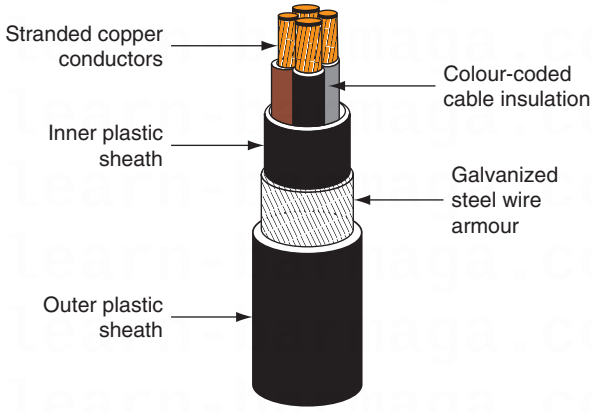

Figure 6.13 A four-core PVC/SWA cable.

The conductors are covered with a colour-coded PVC insulation and then contained singly or with others in a PVC outer sheath.

PVC/SWA cable

PVC insulated steel wire armour cables are used for wiring underground between buildings, for main supplies to dwellings, rising sub-mains and industrial installations. They are used where some mechanical protection of the cable conductors is required.

The conductors are covered with colour-coded PVC insulation and then contained either singly or with others in a PVC sheath (see Fig. 6.13). Around this sheath is placed an armour protection of steel wires twisted along the length of the cable, and a final PVC sheath covering the steel wires protects them from corrosion. The armour sheath also provides the circuit protective conductor (CPC) and the cable is simply terminated using a compression gland. Where a SWA cable is selected for a wiring system and the armour is employed as the CPC, the armour must be effectively earthed as shown in Fig 6.14 and the gland must firmly secure all the strands of the armour.

MI cable

A mineral insulated (MI) cable has a seamless copper sheath which makes it waterproof and fire- and corrosion-resistant. These characteristics often make it the only cable choice for hazardous or high-temperature installations such as oil

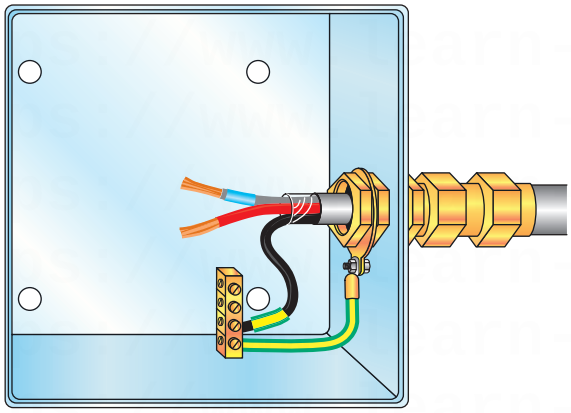

Figure 6.14 SWA cable correctly terminated in an electrical enclosure.

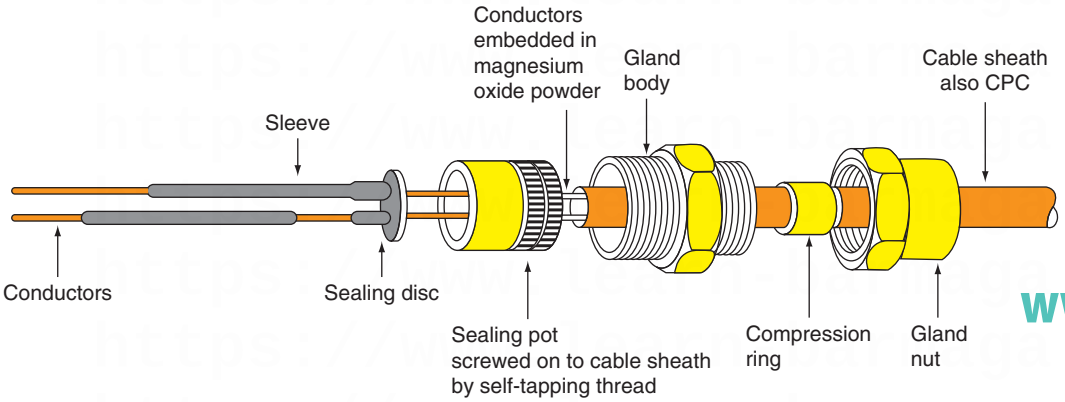

Figure 6.15 MI cable with terminating seal and gland.

refineries and chemical works, boiler houses and furnaces, petrol pump and fire alarm installations.

The cable has a small overall diameter when compared to alternative cables and may be supplied as bare copper or with a PVC oversheath. It is colour-coded orange for general electrical wiring, white for emergency lighting or red for fire alarm wiring. The copper outer sheath provides the CPC, and the cable is terminated with a pot and sealed with compound and a compression gland (see Fig. 6.15).

The copper conductors are embedded in a white powder, magnesium oxide, which is non-ageing and non-combustible, but which is hygroscopic, which means that it readily absorbs moisture from the surrounding air, unless adequately terminated. The termination of an MI cable is a complicated process requiring the electrician to demonstrate a high level of practical skill and expertise for the termination to be successful.

FP 200 cable

FP 200 cable is similar in appearance to an MI cable in that it is a circular tube, or the shape of a pencil, and is available with a red or white sheath. However, it is much simpler to use and terminate than an MI cable.

The cable is available with either solid or stranded conductors that are insulated with 'insudite' a fire resistant insulation material. The conduct-ors are then screened, by wrapping an aluminium tape around the insulated conductors, that is, between the insulated conductors and the outer sheath. This aluminium tape screen is applied metal side down and in contact with the bare CPC.

The sheath is circular and made of a robust thermoplastic low smoke, zero halogen material.

FP 200 is available in 2, 3, 4, 7, 12 and 19 cores with a conductor size range from 1.0 to 4.0 mm. The core colours are: two core, brown and blue, three core, brown, black and gray.

The cable is as easy to use as a PVC insulated and sheathed cable. No special terminations are required, the cable may be terminated through a grommet into a knock out box or terminated through a simple compression gland.

The cable is a fire resistant cable, primarily intended for use in fire alarms and emergency lighting installations or it may be embedded in plaster.

Optical fibre cables

The introduction of fibre-optic cable systems and digital transmissions will undoubtedly affect future cabling arrangements and the work of the electrician. Networks based on the digital technology currently being used so successfully by the telecommunications industry are very likely to become the long-term standard for computer systems. Fibre-optic systems dramatically reduce the number of cables required for control and communications systems, and this will in turn reduce the physical room required for these systems. Fibre-optic cables are also immune to electrical noise when run parallel to mains cables and, therefore, the present rules of segregation and screening may change in the future. There is no spark risk if the cable is accidentally cut and, therefore, such circuits are intrinsically safe. Intrinsic safety is described in Chapter 13 under the heading Hazardous Area Installations.

Definition

Optical fibre cables are communication cables made from optical-quality plastic, the same material from which spectacle lenses are manufactured. The energy is transferred down the cable as digital pulses of laser light as against current flowing down a copper conductor in electrical installation terms.

Optical fibre cables are communication cables made from optical-quality plastic, the same material from which spectacle lenses are manufactured. The energy is transferred down the cable as digital pulses of laser light as against current flowing down a copper conductor in electrical installation terms. The light pulses stay within the fibre-optic cable because of a scientific principle known as 'total internal refraction' which means that the laser light bounces down the cable and when it strikes the outer wall it is always deflected inwards and, therefore, does not escape out of the cable, as shown in Fig. 6.16.

The cables are very small because the optical quality of the conductor is very high and signals can be transmitted over great distances. They are cheap to produce and lightweight because these new cables are made from high-quality plastic and not high-quality copper. Single-sheathed cables are often called 'simplex' cables and twin sheathed cables 'duplex', that is, two simplex cables together in one sheath. Multi-core cables are available containing up to 24 single fibres.

Fibre-optic cables look like steel wire armour cables (but of course are lighter) and should be installed in the same way and given the same level of protection as SWA cables. Avoid tight-radius bends if possible and kinks at all costs. Cables are terminated in special joint boxes which ensure cable ends are cleanly cut and butted together to ensure the continuity of the light pulses. Fibre-optic cables are Band I circuits when used for data transmission and must therefore be segregated from other mains cables to satisfy the IEE Regulations.

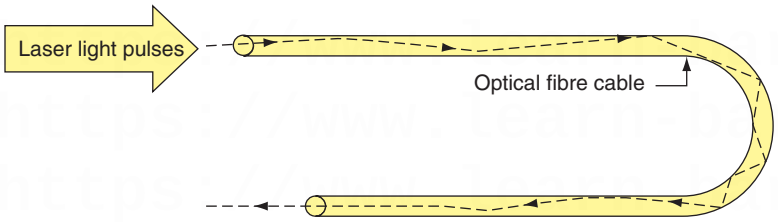

Figure 6.16 Digital pulses of laser light down an optical fibre cable.

The testing of fibre-optic cables requires that special instruments be used to measure the light attenuation (i.e. light loss) down the cable. Finally, when working with fibre-optic cables, electricians should avoid direct eye contact with the low-energy laser light transmitted down the conductors.

Key fact

The cables used for data transmissions and computer networks are Category 5 cables or Cat 5 cables.

Data cables

The cables used for data transmissions and computer networks are Category 5 cables or Cat 5 cables. These are high integrity signal cables usually containing four UTP (universal twisted pair) cables within the cable jacket. New Cat 5E (enhanced) cables are capable of transmission speeds up to one gigabit per second.

High-voltage power cables

The cables used for high-voltage power distribution require termination and installation expertise beyond the normal experience of a contracting electrician. The regulations covering high-voltage distribution are beyond the scope of the IEE regulations for electrical installations. Operating at voltages in excess of 33 kV and delivering thousands of kilowatts, these cables are either suspended out of reach on pylons or buried in the ground in carefully constructed trenches.

High-voltage overhead cables

Suspended from cable towers or pylons, overhead cables must be light, flexible and strong.

The cable is constructed of stranded aluminium conductors formed around a core of steel stranded conductors (see Fig. 6.17). The aluminium conductors carry the current and the steel core provides the tensile strength required to suspend the cable between pylons. The cable is not insulated since it is placed out of reach and insulation would only add to the weight of the cable.

Component parts of an electrical circuit

For a piece of electrical equipment to work efficiently and effectively it must be correctly connected to an electrical circuit. So what is an electrical circuit?

An electrical circuit has the following five components as shown in Fig. 6.18:

- a source of electrical energy. This might be a battery giving a d.c. (direct current) supply or the mains supply which is a.c. (alternating current)
- a source of circuit protection. This might be a fuse or circuit breaker which will protect the circuit from ‘overcurrent’
- the circuit conductors or cables. These carry voltage and current to power the load

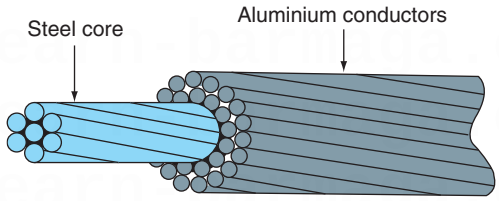

Figure 6.17 132 kV overhead cable construction.

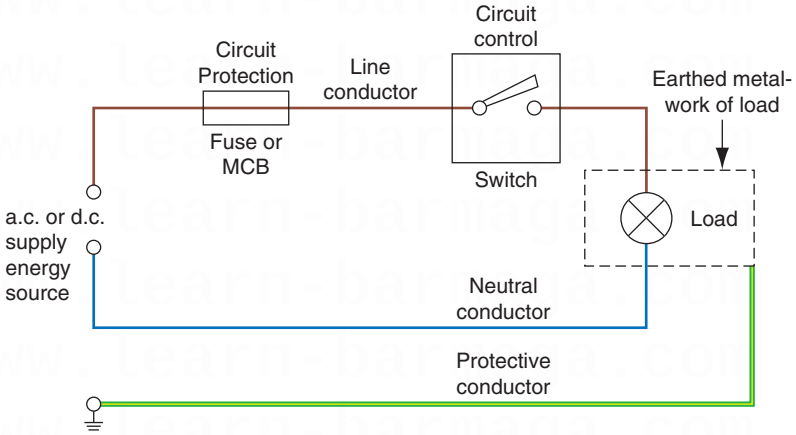

Figure 6.18 Component parts of an electric circuit.

- a means to control the circuit. This might be a simple on/off switch but it might also be a dimmer or a thermostat
- and a load. This is something which needs electricity to make it work. It might be an electric lamp, an electrical appliance, an electric motor or an i-pod.

Choosing an appropriate wiring system

An electrical installation is made up of many different electrical circuits, lighting circuits, power circuits, single-phase domestic circuits and three-phase industrial or commercial circuits.

Whatever the type of circuit, the circuit conductors are contained within cables or enclosures.

Part 5 of the IEE Regulations tells us that electrical equipment and materials must be chosen so that they are suitable for the installed conditions, taking into account temperature, the presence of water, corrosion, mechanical damage, vibration or exposure to solar radiation. Therefore, PVC insulated and sheathed cables are suitable for domestic installations but for a cable requiring mechanical protection and suitable for burying underground, a PVC/SWA cable would be preferable. These two types of cable are shown in Figs 6.12 and 6.13 of this chapter.

MI cables are waterproof, heatproof and corrosion resistant with some mechanical protection. These qualities often make it the only cable choice for hazardous or high-temperature installations such as oil refineries, chemical works, boiler houses and petrol pump installations. An MI cable with terminating gland and seal is shown in Fig. 6.15.

However, before carrying out any work on an electrical system an electrician must first of all carry out a safe isolation procedure.

Secure electrical isolation

Electric shock occurs when a person becomes part of the electrical circuit. The level or intensity of the shock will depend upon many factors, such as age, fitness and the circumstances in which the shock is received. The lethal level is approximately 50 mA, above which muscles contract, the heart flutters and breathing stops. A shock above the 50 mA level is therefore fatal unless the person is quickly separated from the supply. Below 50 mA only an unpleasant tingling sensation may be experienced or you may be thrown across a room or shocked enough to fall from a roof or ladder, but the resulting fall may lead to serious injury.

To prevent people receiving an electric shock accidentally, all circuits contain protective devices. All exposed metal is earthed, fuses and miniature circuit breakers (MCBs) are designed to trip under fault conditions and residual current devices (RCDs) are designed to trip below the fatal level.

Construction workers and particularly electricians do receive electric shocks, usually as a result of carelessness or unforeseen circumstances. As an electrician working on electrical equipment you must always make sure that the equipment is switched off or electrically isolated before commencing work. Every circuit must be provided with a means of isolation (IEE Regulation 132.15). When working on portable equipment or desktop units it is often simply a matter of unplugging the equipment from the adjacent supply. Larger pieces of equipment, and electrical machines may require isolating at the local isolator switch before work commences. To deter anyone from re-connecting the supply while work is being carried out on equipment, a sign 'Danger – Electrician at Work' should be displayed on the isolator and the isolation 'secured' with a small padlock or the fuses removed so that no one can reconnect whilst work is being carried out on that piece of equipment. The Electricity at Work Regulations 1989 are very specific at Regulation 12(1) that we must ensure the disconnection and separation of electrical equipment from every source of supply and that this disconnection and separation is secure. Where a test instrument or voltage indicator is used to prove the supply dead, Regulation 4(3) of the Electricity at Work Regulations 1989 recommends that the following procedure is adopted.

Definition

Electrical isolation: We must ensure the disconnection and separation of electrical equipment from every source of supply and that this disconnection and separation is secure.

1. First connect the test device such as that shown in Fig. 6.19 to the supply which is to be isolated. The test device should indicate mains voltage.
2. Next, isolate the supply and observe that the test device now reads zero volts.
3. Then connect the same test device to a known live supply or proving unit such as that shown in Fig. 6.20 to 'prove' that the tester is still working correctly.
4. Finally secure the isolation and place warning signs; only then should work commence.

The test device being used by the electrician must incorporate safe test leads which comply with the Health and Safety Executive (HSE) Guidance Note 38 on electrical test equipment. These leads should incorporate barriers to prevent the user touching live terminals when testing and incorporating a protective fuse and be well insulated and robust, such as those shown in Fig. 6.21.

To isolate a piece of equipment or individual circuit successfully, competently, safely and in accordance with all the relevant regulations, we must follow a procedure such as that given by the flow diagram in Fig. 6.22. Start at the top

Figure 6.19 Typical voltage indicator.

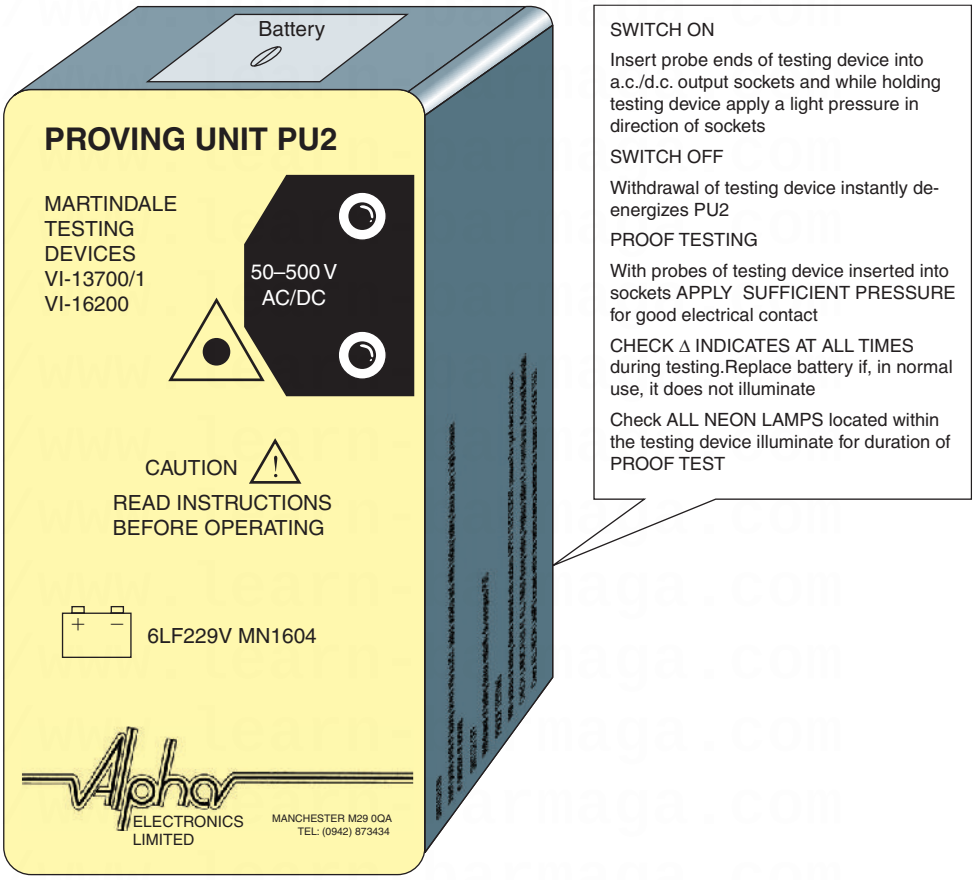

Figure 6.20 Voltage proving unit.

and work down the flow diagram. When the heavy outlined amber boxes are reached, pause and ask yourself whether everything is satisfactory up to this point. If the answer is ‘yes’, move on. If the answer is ‘no’, go back as indicated by the diagram.

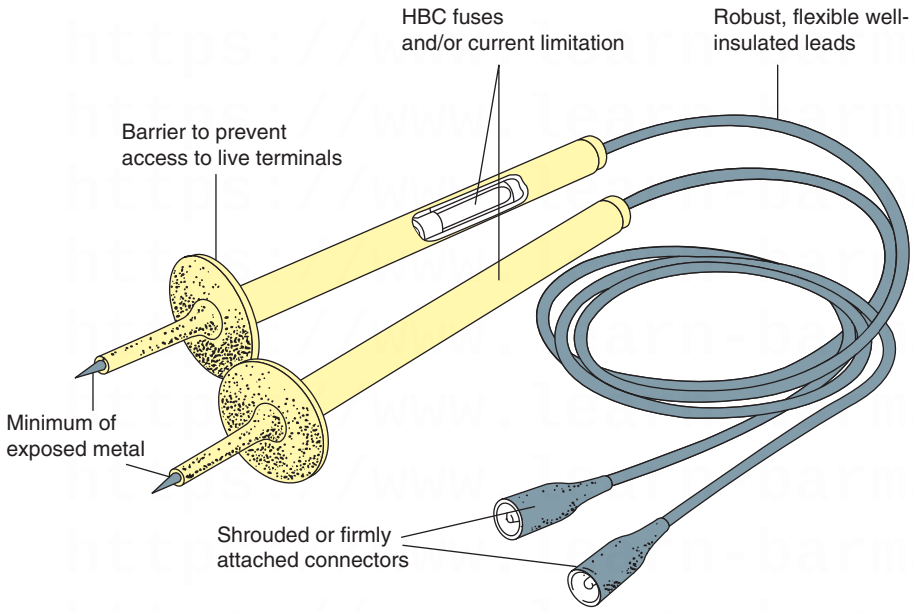

Figure 6.21 Recommended type of test probe and leads.

Live testing

The Electricity at Work Regulations 1989 at Regulation 4(3) tells us that it is preferable that supplies be made dead before work commences. However, it does acknowledge that some work, such as fault finding and testing, may require the electrical equipment to remain energized. Therefore, if the fault finding and testing can only be successfully carried out live then the person carrying out the fault diagnosis must:

- be trained so that they understand the equipment and the potential hazards of working live and can, therefore, be deemed 'competent' to carry out that activity;
- only use approved test equipment;
- set up appropriate warning notices and barriers so that the work activity does not create a situation dangerous to others.

While live testing may be required by workers in the electrotechnical industries in order to find the fault, live repair work must not be carried out. The individual circuit or piece of equipment must first be isolated before work commences in order to comply with the Electricity at Work Regulations 1989.

Permit-to-work system

The **permit-to-work procedure** is a type of 'safe system to work' procedure used in specialized and potentially dangerous plant process situations. The procedure was developed for the chemical industry, but the principle is equally applicable to the management of complex risk in other industries or situations. For example:

- Working on part of an assembly line process where goods move through a complex, continuous process from one machine to another (e.g. the food industry).
- Repairs to railway tracks, tippers and conveyors.
- Working in confined spaces (e.g. vats and storage containers).

Definition

The *permit-to-work procedure* is a type of 'safe system to work' procedure used in specialized and potentially dangerous plant process situations.

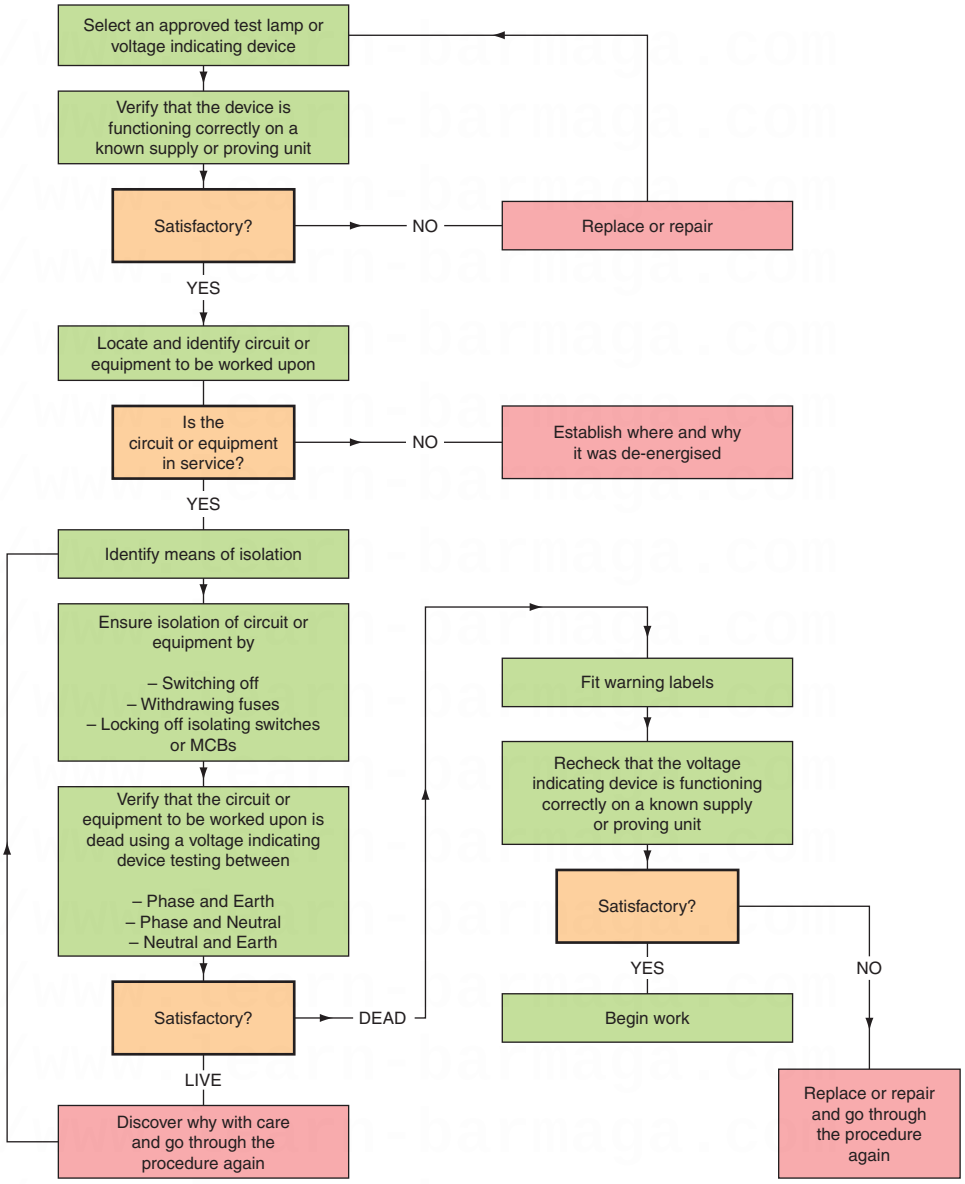

Figure 6.22 Flowchart for a secure isolation procedure.

- Working on or near overhead crane tracks.
- Working underground or in deep trenches.
- Working on pipelines.
- Working near live equipment or unguarded machinery.
- Roof work.
- Working in hazardous atmospheres (e.g. the petroleum industry).
- Working near or with corrosive or toxic substances.

All the above situations are high-risk working situations that should be avoided unless you have received special training and will probably require the completion of a permit-to-work. Permits to work must adhere to the following eight principles:

1. Wherever possible the hazard should be eliminated so that the work can be done safely without a permit-to-work.
2. The Site Manager has overall responsibility for the permit-to-work even though he may delegate the responsibility for its issue.

3 The permit must be recognized as the master instruction, which, until it is cancelled, overrides all other instructions.
4 The permit applies to everyone on site, other trades and sub-contractors.
5 The permit must give detailed information, for example: (i) which piece of plant has been isolated and the steps by which this has been achieved (ii) what work is to be carried out (iii) the time at which the permit comes into effect.
6 The permit remains in force until the work is completed and is cancelled by the person who issued it.
7 No other work is authorized. If the planned work must be changed, the existing permit must be cancelled and a new one issued.
8 Responsibility for the plant must be clearly defined at all stages because the equipment that is taken out of service is released to those who are to carry out the work.

The people doing the work, the people to whom the permit is given, take on the responsibility of following and maintaining the safeguards set out in the permit, which will define what is to be done (no other work is permitted) and the time scale in which it is to be carried out.

The permit-to-work system must help communication between everyone involved in the process or type of work. Employers must train staff in the use of such permits and ideally, training should be designed by the company issuing the permit, so that sufficient emphasis can be given to particular hazards present and the precautions which will be required to be taken. For further details see Permit to Work @ www.hse.gov.uk

Safety first

Isolation

Never carry out live repair work.

- First – test to verify circuit is 'alive'.
- Second – isolate the supply.
- Third – test to verify circuit is 'dead'.
- Fourth – secure the isolation.
- Fifth – test the tester.

Check your understanding

When you have completed the questions, check out the answers at the back of the book.

Note: more than one multiple choice answer may be correct.

1 A scale drawing which shows the original intention for the position of electrical equipment is called a:
   a. wiring diagram
   b. detail assembly drawing
   c. site plan or layout drawing
   d. as-fitted drawing.

2 The scale drawing which shows the actual position of the electrical equipment upon completion of the contract is called a:
   a. wiring diagram
   b. detail assembly drawing
   c. site plan or layout drawing
   d. as-fitted drawing.

3 A scale drawing showing the position of equipment by graphical symbols is a description of a:
   a. block diagram
   b. site plan or layout diagram
   c. wiring diagram
   d. circuit diagram.

4 A diagram which shows the detailed connections between individual items of equipment is a description of a:
   a. block diagram
   b. site plan or layout diagram
   c. wiring diagram
   d. circuit diagram.

5 A diagram which shows most clearly how a circuit works, with all items represented by graphical symbols is a description of a:
   a. block diagram
   b. site plan or layout diagram
   c. wiring diagram
   d. circuit diagram.

6 An electrical cable is made up of three parts which are:
   a. conduction, convection and radiation
   b. conductor, insulation and outer sheath
   c. heating, magnetic and chemical
   d. conductors and insulators.

7 An appropriate wiring method for a domestic installation would be a:
   a. metal conduit installation
   b. trunking and tray installation
   c. PVC cables
   d. PVC/SWA cables.

8 An appropriate wiring method for an underground feed to a remote building would be a:
   a. metal conduit installation
   b. trunking and tray installation
   c. PVC cables
   d. PVC/SWA cables.

9 An appropriate wiring method for a high-temperature installation in a boiler house is:
   a. metal conduit installation
   b. trunking and tray installation
   c. FP200 cables
   d. MI cables.

10 The cables suspended from the transmission towers of the national grid network are made from:
   a. copper and brass
   b. copper with PVC insulation
   c. aluminium and steel
   d. aluminium and porcelain.

11 An appropriate wiring system for a three-phase industrial installation would be:
   a. PVC cables
   b. PVC conduit
   c. one which meets the requirements of Part 2 of the IEE Regulations
   d. one which meets the requirements of Part 5 of the IEE Regulations.

12 Sketch a site plan or layout drawing for the room which you normally use at college and indicate the position of all the electrical accessories in the room using BS EN 60617 symbols.

13 What method would you use to let the office know that the materials you were expecting have not yet arrived?

14 What method would you use to send a long list of materials required for the job you are on to the wholesalers for later delivery to the site? Use bullet points.

15 What are the advantages and disadvantages of having sources of technical information on:
   a. some form of electronic storage system such as a CD, DVD or USB memory stick or
   b. hard copy such as a catalogue, drawings or On Site Guide?

   Would it make a difference if you were at the office or on a construction site?

16 State the advantages and disadvantages of:
   a. telephone messages
   b. written messages.

17 Produce a quick coloured sketch of a PVC insulated and sheathed cable and name the parts.

18 Produce a quick coloured sketch of a PVC/SWA cable and name the parts.

19 Produce a quick sketch of an electric circuit and name the five component parts.

20 Give an example of a device or accessory for each component part. For example, the supply might be from the a.c. mains or a battery.

21 Use bullet points to describe a safe isolation procedure.

CHAPTER 7

Inspection, testing and commissioning electrical installations

Unit 307 of the City and Guilds 2357 syllabus

Understanding principles, practices and legislation for the inspection, testing, commissioning and certification of electrotechnical systems and equipment in buildings, structures and the environment.

Online Material WWW

This chapter has free associated content, including animations and instructional videos, to support your learning

When you see the logo, visit the website below to access this material:

www.elsevierdirect.com/companions/9780080966281

Electrical testing

The electrical contractor is charged with a responsibility to carry out a number of tests on an electrical installation and electrical equipment. The individual tests are dealt with in Part 6 of the IEE Regulations and described later in this chapter.

The reasons for testing the installation are:

- to ensure that the installation complies with the IEE Regulations,
- to ensure that the installation meets the specification,
- to ensure that the installation is safe to use.

Those who are to carry out the electrical tests must first consider the following safety factors:

- An assessment of safe working practice must be made before testing begins.
- All safety precautions must be put in place before testing begins.

Basic Electrical Installation Work. 978-0-08-096628-1

- Everyone must be notified that the test process is about to take place, for example the client and other workers who may be affected by the tests.
- 'Permits-to-Work' must be obtained where relevant.
- All sources of information relevant to the tests have been obtained.
- The relevant circuits and equipment have been identified.
- Safe isolation procedures have been carried out – care must be exercised here, in occupied premises, not to switch off computer systems without first obtaining permission.
- Those who are to carry out the tests are competent to do so.

The electrical contractor is required by the IEE Regulations to test all new installations and major extensions during erection and upon completion before being put into service. The contractor may also be called upon to test installations and equipment in order to identify and remove faults. These requirements imply the use of appropriate test instruments, and in order to take accurate readings consideration should be given to the following points:

- Is the instrument suitable for this test?
- Has the correct scale been selected?
- Is the test instrument correctly connected to the circuit?

Many commercial instruments are capable of making more than one test or have a range of scales to choose from. A range selector switch is usually used to choose the appropriate scale. A scale range should be chosen which suits the range of the current, voltage or resistance being measured. For example, when taking a reading in the 8 or 9 V range, the obvious scale choice would be one giving 10 V full scale deflection. To make this reading on an instrument with 100 V full scale deflection would lead to errors, because the deflection is too small.

Ammeters must be connected in series with the load, and voltmeters in parallel across the load as shown in Fig. 7.1. The power in a resistive load may be calculated from the readings of voltage and current since $P = VI$. This will give accurate calculations on both a.c. and d.c. supplies, but when measuring the power of an a.c. circuit which contains inductance or capacitance, a wattmeter must be used because the voltage and current will be out of phase.

Measurement of power in a three-phase circuit

One-wattmeter method

When three-phase loads are balanced, for example in motor circuits, one wattmeter may be connected into any phase, as shown in Fig. 7.2. This wattmeter will indicate the power in that phase and, since the load is balanced, the total power in the three-phase circuit will be given by:

$$\text{Total power} = 3 \times \text{Wattmeter reading}$$

Two-wattmeter method

This is the most commonly used method for measuring power in a three-phase, three-wire system since it can be used for both balanced and unbalanced loads connected in either star or delta. The current coils are connected to any two of

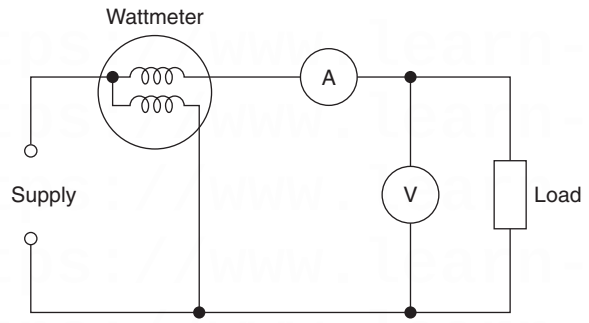

Figure 7.1 Wattmeter, ammeter and voltmeter correctly connected to a load.

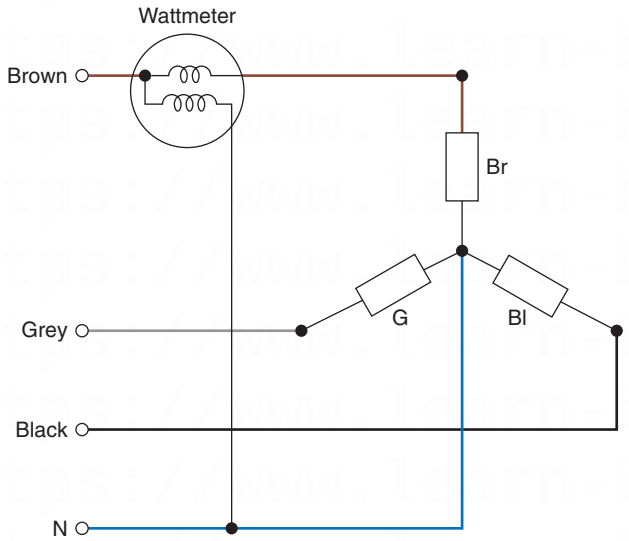

Figure 7.2 One-wattmeter measurement of power.

the lines, and the voltage coils are connected to the other line, the one without a current coil connection, as shown in Fig. 7.3. Then,

$$\text{Total power} = W_1 + W_2$$

This equation is true for any three-phase load, balanced or unbalanced, star or delta connection, provided there is no fourth wire in the system.

Three-wattmeter method

If the installation is four-wire, and the load on each phase is unbalanced, then three-wattmeter readings are necessary, connected as shown in Fig. 7.4. Each wattmeter measures the power in one phase and the total power will be given by:

$$\text{Total power} = W_1 + W_2 + W_3$$

Tong tester

The tong tester, or clip-on ammeter, works on the same principle as the transformer. The laminated core of the transformer can be opened and passed over the busbar or single-core cable. In this way a measurement of the current

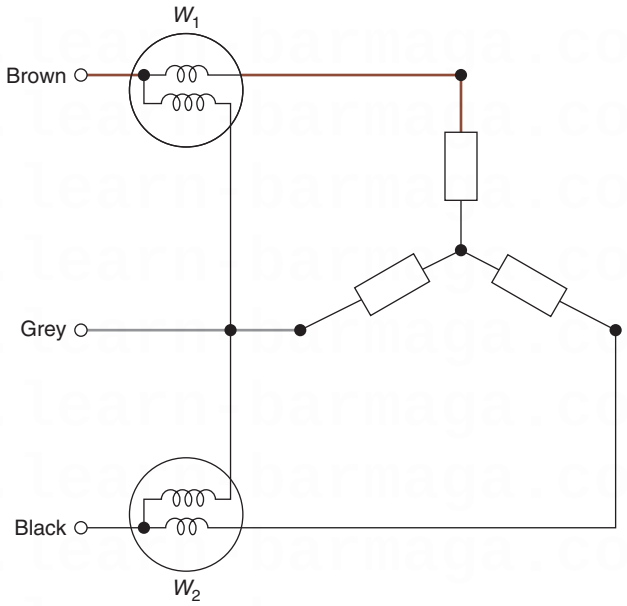

Figure 7.3 Two-wattmeter measurement of power.

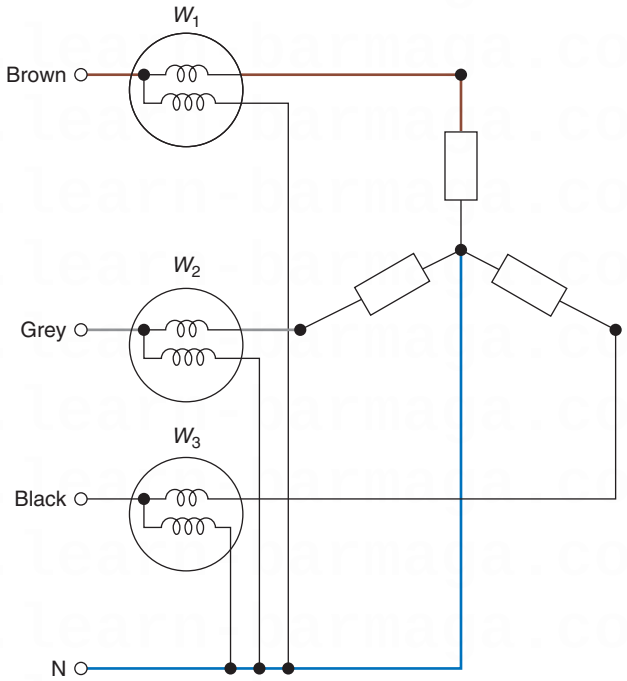

Figure 7.4 Three-wattmeter measurement of power.

being carried can be made without disconnection of the supply. The construction is shown in Fig. 7.5.

Figure 7.5 Tong tester or clip-on ammeter.

Phase sequence testers

Phase sequence is the order in which each phase of a three-phase supply reaches its maximum value. The normal phase sequence for a three-phase supply is brown–black–grey, which means that first brown, then black and finally the grey phase reaches its maximum value.

Phase sequence has an important application in the connection of three-phase transformers. The secondary terminals of a three-phase transformer must not be connected in parallel until the phase sequence is the same.

A phase sequence tester can be an indicator which is, in effect, a miniature induction motor, with three clearly colour-coded connection leads. A rotating disc with a pointed arrow shows the normal rotation for phase sequence brown–black–grey. If the sequence is reversed, the disc rotates in the opposite direction to the arrow.

Test equipment used by electricians

The Health and Safety Executive (HSE) has published a guidance note (GS 38) which advise electricians and other electrically competent people on the selection of suitable test probes, voltage indicating devices and measuring instruments. This is because they consider suitably constructed test equipment to be as vital for personal safety as the training and practical skills of the electrician. In the past, unsatisfactory test probes and voltage indicators have frequently been the cause of accidents, and therefore all test probes must now incorporate the following features:

1. The probes must have finger barriers or be shaped so that the hand or fingers cannot make contact with the live conductors under test.
2. The probe tip must not protrude more than 2 mm, and preferably only 1 mm, be spring-loaded and screened.
3. The lead must be adequately insulated and coloured so that one lead is readily distinguished from the other.
4. The lead must be flexible and sufficiently robust.
5. The lead must be long enough to serve its purpose but not too long.
6. The lead must not have accessible exposed conductors even if it becomes detached from the probe or from the instrument.
7. Where the leads are to be used in conjunction with a voltage detector they must be protected by a fuse.

A suitable probe and lead is shown in Fig. 7.6.

GS 38 also tells us that where the test is being made simply to establish the presence or absence of a voltage, the preferred method is to use a proprietary test lamp or voltage indicator which is suitable for the working voltage, rather than a multimeter. Accident history has shown that incorrectly set multimeters or makeshift devices for voltage detection have frequently caused accidents. Figure 7.7 shows a suitable voltage indicator. Test lamps and voltage indicators are not fail-safe, and therefore GS 38 recommends that they should be regularly proved, preferably before and after use, as described in the flowchart for a safe isolation procedure shown in Fig 7.10.

Test procedures

1. The circuits must be isolated using a ‘safe isolation procedure’, such as that described below, before beginning to test.
2. All test equipment must be ‘approved’ and connected to the test circuits by recommended test probes as described by GS 38. The test equipment used must also be ‘proved’ on a known supply or by means of a proving unit such as that shown in Fig. 7.8.

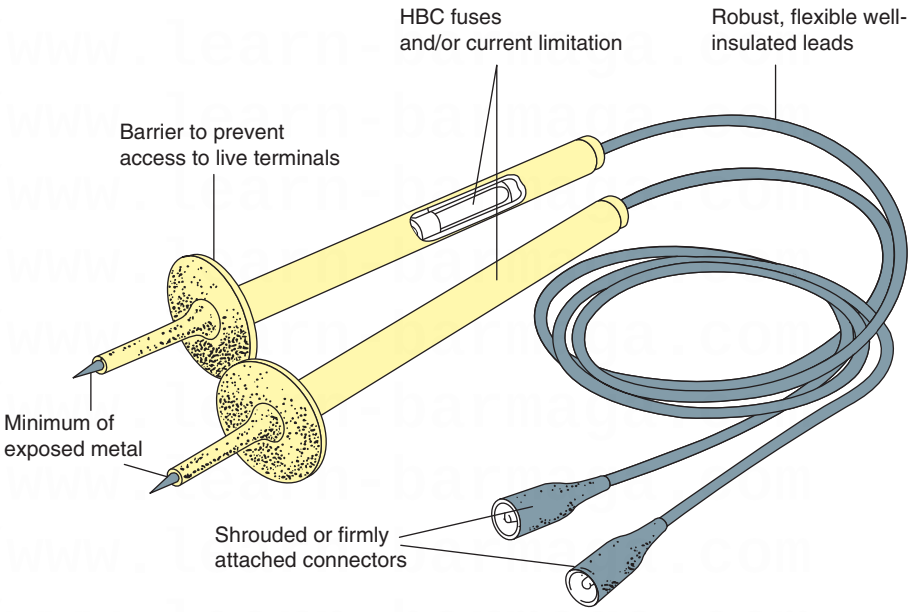

Figure 7.6 Recommended type of test probe and leads.

Figure 7.7 Typical voltage indicator.

3 Isolation devices must be 'secured' in the 'off' position as shown in Fig. 7.9.
4 Warning notices must be posted.
5 All relevant safety and functional tests must be completed before restoring the supply.

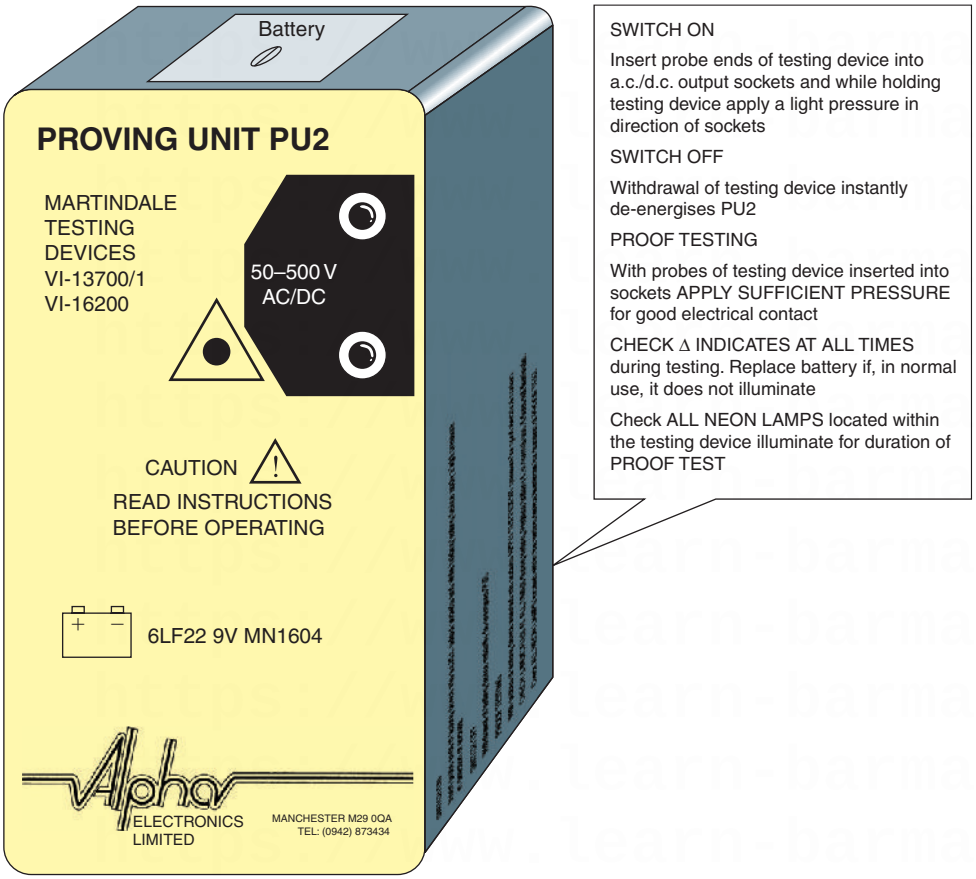

Figure 7.8 Voltage proving unit.

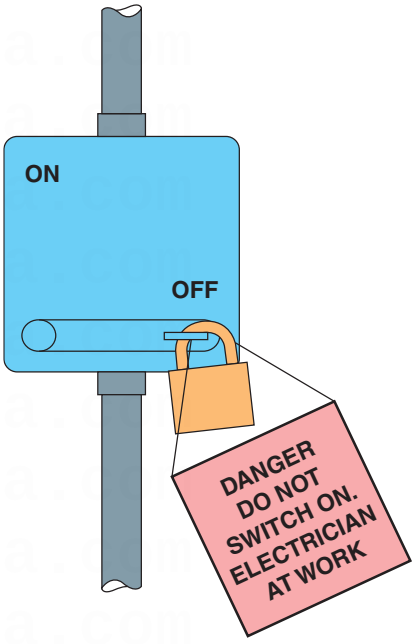

Figure 7.9 Secure isolation of a supply.

Live testing

The Electricity at Work Regulations tell us that it is 'preferable' that supplies be made dead before work commences (Regulation 4(3)). However, it does acknowledge that some work, such as fault-finding and testing, may require the electrical equipment to remain energized. Therefore, if the fault-finding and testing can only be successfully carried out 'live', then the person carrying out the fault diagnosis must:

- be trained so that he understands the equipment and the potential hazards of working live and can, therefore, be deemed to be 'competent' to carry out the activity;
- only use approved test equipment;
- set up barriers and warning notices so that the work activity does not create a situation dangerous to others.

Note that while live testing may be required in order to find the fault, live repair work must not be carried out. The individual circuit or item of equipment must first be isolated.

Definition

The *Electricity at Work Regulations* tells us that it is 'preferable' that supplies be made dead before work commences (Regulation 4(3)).

Safety first

Note that while live testing may be required in order to find the fault, live repair work must not be carried out. The individual circuit or item of equipment must first be isolated.

Isolation of supply

The Electricity at Work Regulations are very specific in describing the procedure to be used for isolation of the electrical supply. Regulation 12(1) tells us that *isolation* means the disconnection and separation of the electrical equipment

from every source of electrical energy in such a way that this disconnection and separation is secure. Regulation 4(3) tells us that we must also prove the conductors dead before work commences and that the test instrument used for this purpose must itself be proved immediately before, and immediately after, testing the conductors. To isolate an individual circuit or item of equipment successfully, competently and safely we must follow a procedure such as that given by the flow diagram in Fig. 7.10. Start at the top and work your way down the flowchart. When you get to the heavy-outlined amber boxes, pause and ask yourself whether everything is satisfactory up to this point. If the answer is yes, move on. If no, go back as indicated by the diagram.

Definition

Isolation means the disconnection and separation of the electrical equipment from every source of electrical energy in such a way that this disconnection and separation is secure.

Inspection and testing techniques

The testing of an installation implies the use of instruments to obtain readings. However, a test is unlikely to identify a cracked socket outlet, a chipped or loose switch plate or a missing conduit-box lid or saddle, so it is also necessary to make a visual inspection of the installation.

All new installations must be inspected and tested during erection and upon completion before being put into service. All existing installations should be periodically inspected and tested to ensure that they are safe and meet the IEE Regulations (IEE Regulations 610–634).

The method used to test an installation may inject a current into the system. This current must not cause danger to any person or equipment in contact with the installation, even if the circuit being tested is faulty. The test results must be compared with any relevant data, including the tables in the IEE Regulations, and the test procedures must be followed carefully and in the correct sequence, as indicated by IEE Regulation 612.1. This ensures that the protective conductors are correctly connected and secure before the circuit is energized.

Definition

The aim of the *visual inspection* is to confirm that all equipment and accessories are undamaged and comply with the relevant British and European Standards, and also that the installation has been securely and correctly erected.

Key fact

Testing

- All new installations must be inspected and tested during erection and upon completion.
- All existing installations must be inspected and tested periodically.
- IEE Regulations 610–634.

Visual inspection

The installation must be visually inspected before testing begins. The aim of the **visual inspection** is to confirm that all equipment and accessories are undamaged and comply with the relevant British and European Standards, and also that the installation has been securely and correctly erected. IEE Regulation 611.3 gives a checklist for the initial visual inspection of an installation, including:

- connection of conductors;
- identification of conductors;
- routing of cables in safe zones;
- selection of conductors for current-carrying capacity and volt drop;
- connection of single-pole devices for protection or switching in phase conductors only;
- correct connection of socket outlets, lampholders, accessories and equipment;
- presence of fire barriers, suitable seals and protection against thermal effects;
- methods of 'Basic Protection' against electric shock, including the insulation of live parts and placement of live parts out of reach by fitting appropriate barriers and enclosures;
- methods of 'Fault Protection' against electric shock including the presence of earthing conductors for both protective bonding and supplementary bonding.
- prevention of detrimental influences (e.g. corrosion);

Safety first

Live working

- **NEVER** work **LIVE**
- Some 'live testing' is allowed by 'competent persons'
- Otherwise, isolate and secure the isolation
- Prove the supply dead before starting work.

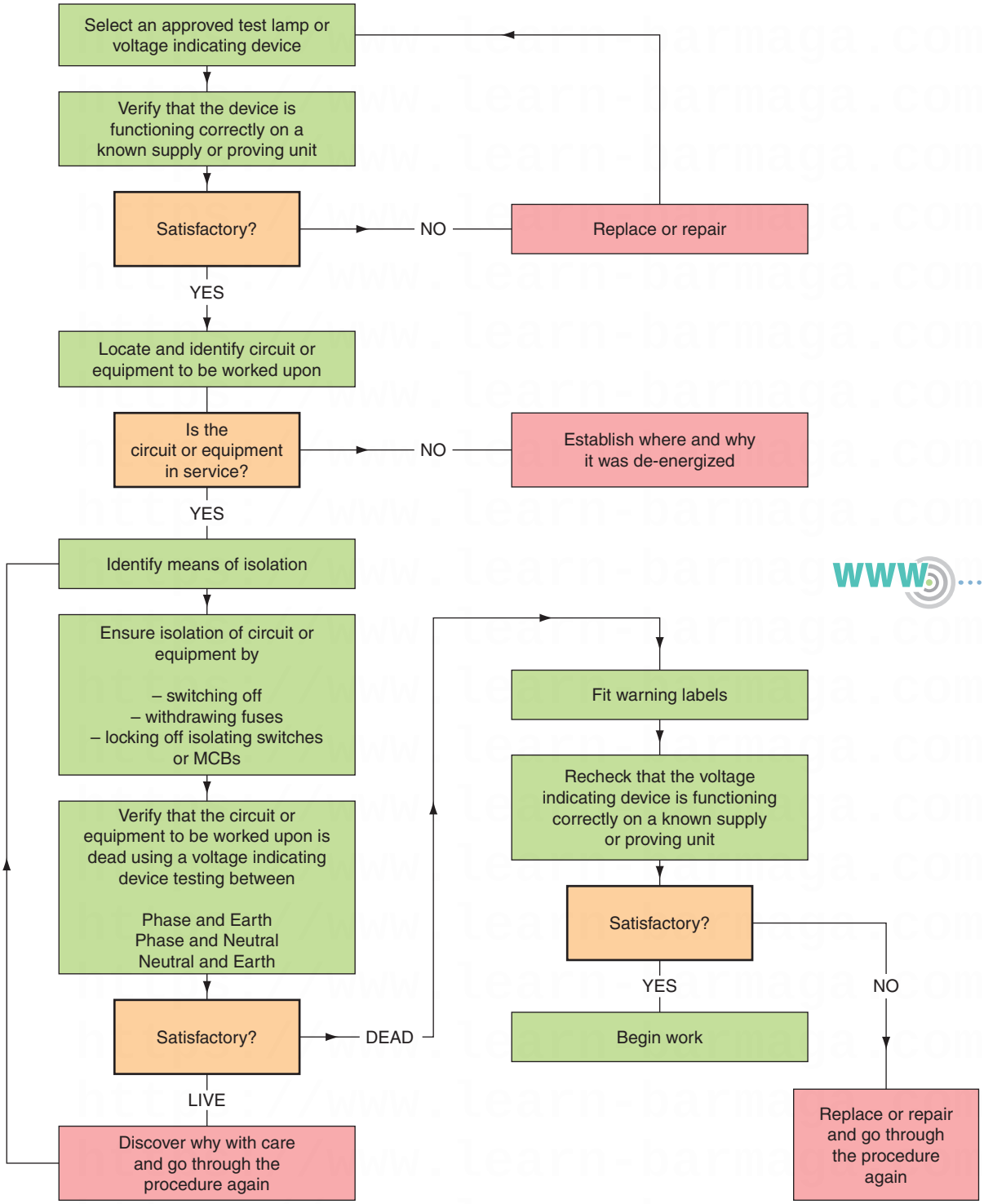

Figure 7.10 Flowchart for a secure isolation procedure.

- presence of appropriate devices for isolation and switching;
- presence of undervoltage protection devices;
- choice and setting of protective devices;
- labelling of circuits, fuses, switches and terminals;
- selection of equipment and protective measures appropriate to external influences;

- adequate access to switchgear and equipment;
- presence of danger notices and other warning notices;
- presence of diagrams, instructions and similar information;
- appropriate erection method.

The checklist is a guide. It is not exhaustive or detailed, and should be used to identify relevant items for inspection, which can then be expanded upon. For example, the first item on the checklist, connection of conductors, might be further expanded to include the following:

- Are connections secure?
- Are connections correct? (conductor identification)
- Is the cable adequately supported so that no strain is placed on the connections?
- Does the outer sheath enter the accessory?
- Is the insulation undamaged?
- Does the insulation proceed up to, but not *into*, the connection?

This is repeated for each appropriate item on the checklist.

Those tests which are relevant to the installation must then be carried out in the sequence given in IEE Regulation 612.1 for reasons of safety and accuracy. These tests are as follows:

Before the supply is connected:

1. Test for continuity of protective conductors, including protective equipotential and supplementary bonding.
2. Test the continuity of all ring final circuit conductors.
3. Test for insulation resistance.
4. Test for polarity using the continuity method.
5. Test the earth electrode resistance.

With the supply connected:

6. Recheck polarity using a voltmeter or approved test lamp.
7. Test the earth fault loop impedance.
8. Carry out additional protection testing (e.g. operation of residual current devices, RCDs).

If any test fails to comply with the IEE Regulations, then *all* the preceding tests must be repeated after the fault has been rectified. This is because the earlier test results may have been influenced by the fault (IEE Regulation 612.1).

There is an increased use of electronic devices in electrical installation work; for example, in dimmer switches and ignitor circuits of discharge lamps. These devices should temporarily be disconnected so that they are not damaged by the test voltage of, for example, the insulation resistance test (IEE Regulation 612.3).

Definition

The *test instruments and test leads* used by the electrician for testing an electrical installation must meet all the requirements of the relevant regulations.

Approved test instruments

The **test instruments and test leads** used by the electrician for testing an electrical installation must meet all the requirements of the relevant regulations. The HSE has published guidance note GS 38 for test equipment used by electricians. The IEE Regulations (BS 7671) also specify the test voltage or current required to carry out particular tests satisfactorily. All test equipment must be chosen to comply with the relevant parts of BS EN 61557. All testing must, therefore, be carried out using an 'approved' test instrument if the

test results are to be valid. The test instrument must also carry a calibration certificate, otherwise the recorded results may be void. *Calibration certificates* usually last for a year. Test instruments must, therefore, be tested and recalibrated each year by an approved supplier. This will maintain the accuracy of the instrument to an acceptable level, usually within 2% of the true value.

Definition

Calibration certificates usually last for a year. Test instruments must, therefore, be tested and recalibrated each year by an approved supplier.

Modern digital test instruments are reasonably robust, but to maintain them in good working order they must be treated with care. An approved test instrument costs as much as a good-quality camera; it should, therefore, receive the same care and consideration.

Let us now look at the requirements of four often used test meters.

Continuity tester

To measure accurately the resistance of the conductors in an electrical installation, we must use an instrument which is capable of producing an open circuit voltage of between 4 and 24 V a.c. or d.c., and delivering a short-circuit current of not less than 200 mA (IEE Regulation 612.2.1). The functions of continuity testing and insulation resistance testing are usually combined in one test instrument.

Insulation resistance tester

The test instrument must be capable of detecting insulation leakage between live conductors and between live conductors and earth. To do this and comply with IEE Regulation 612.3 the test instrument must be capable of producing a test voltage of 250, 500 or 1000 V and delivering an output current of not less than 1 mA at its normal voltage.

Earth fault loop impedance tester

The test instrument must be capable of delivering fault currents as high as 25 A for up to 40 ms using the supply voltage. During the test, the instrument does an Ohm's law calculation and displays the test result as a resistance reading.

RCD tester

Where circuits are protected by an RCD we must carry out a test to ensure that the device will operate very quickly under fault conditions and within the time limits set by the IEE Regulations. The instrument must, therefore, simulate a fault and measure the time taken for the RCD to operate. The instrument is, therefore, calibrated to give a reading measured in milliseconds to an in-service accuracy of 10%.

If you purchase good-quality 'approved' test instruments and leads from specialist manufacturers they will meet all the regulations and standards and therefore give valid test results. However, to carry out all the tests required by the IEE Regulations will require a number of test instruments and this will represent a major capital investment in the region of £1000.

Definition

A 'competent person' is someone who has the necessary technical skills, training and expertise to safely carry out a particular activity.

Let us now consider the individual tests.

1 Testing for continuity of protective conductors, including main and supplementary equipotential bonding (612.2.1)

The object of the test is to ensure that the circuit protective conductor (CPC) is correctly connected, is electrically sound and has a total resistance which is low enough to permit the overcurrent protective device to operate within the disconnection time requirements of IEE Regulation 411.4.6, should an earth fault occur. Every protective conductor must be separately tested from

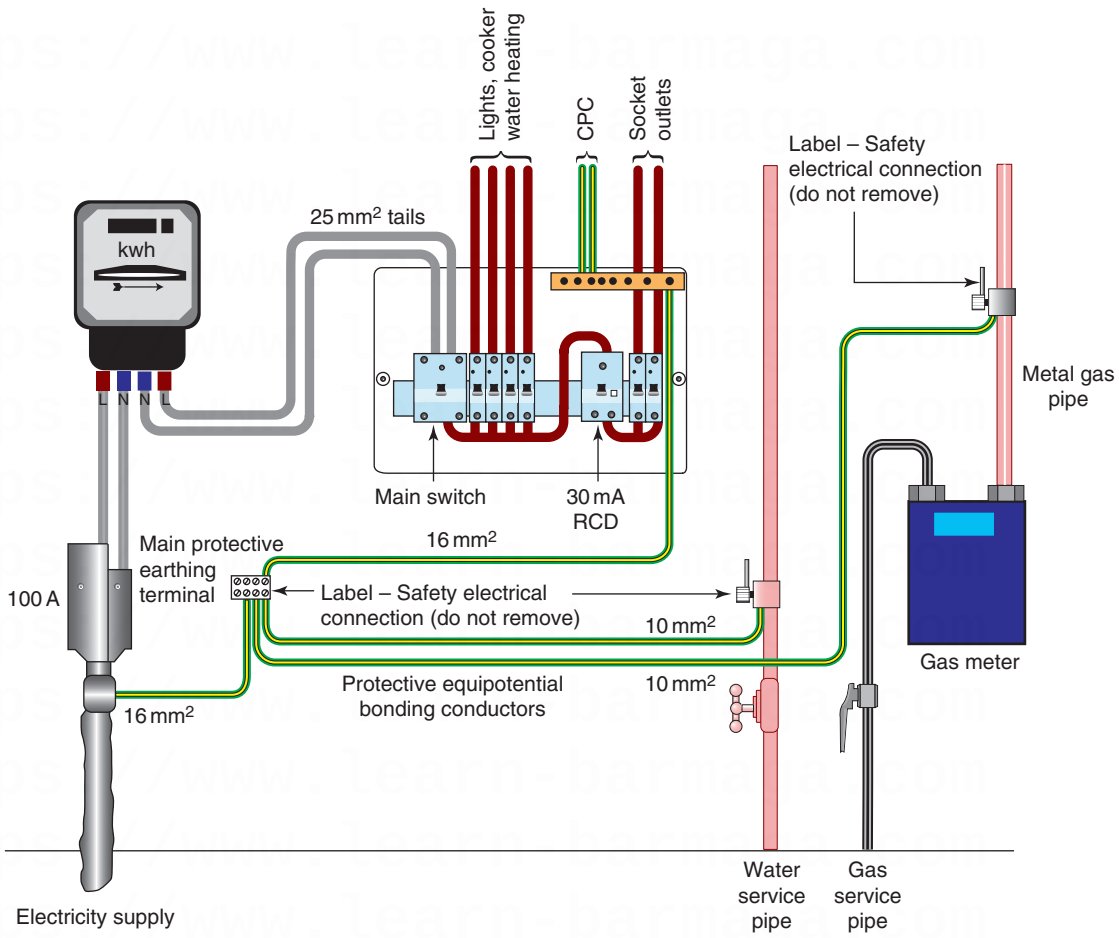

Figure 7.11 Cable Sheath Earth Supplies (TN-S System): Showing earthing and main protective equipotential bonding arrangements.

the consumer's main protective earthing terminal to verify that it is electrically sound and correctly connected, including the protective equipotential and supplementary bonding conductors as shown in Fig. 7.11. The IEE Regulations describe the need to consider additional protection by supplementary equipotential bonding in situations where there is a high risk of electric shock such as kitchens and bathrooms (IEE Regulation 415.2).

A d.c. test using an ohmmeter continuity tester is suitable where the protective conductors are of copper or aluminium up to 35 mm^2. The test is made with the supply disconnected, measuring from the consumer's main protective earthing terminal to the far end of each CPC, as shown in Fig. 7.12. The resistance of the long test lead is subtracted from these readings to give the resistance value of the CPC. The result is recorded on an installation schedule such as that given in Appendix 6 of the IEE Regulations.

A satisfactory test result for the bonding conductors will be in the order of 0.05 Ω or less (IEE Guidance Note 3).

Where steel conduit or trunking forms the protective conductor, the standard test described above may be used, but additionally the enclosure must be visually checked along its length to verify the integrity of all the joints.

If the inspecting engineer has grounds to question the soundness and quality of these joints then the phase earth loop impedance test described later in this chapter should be carried out.

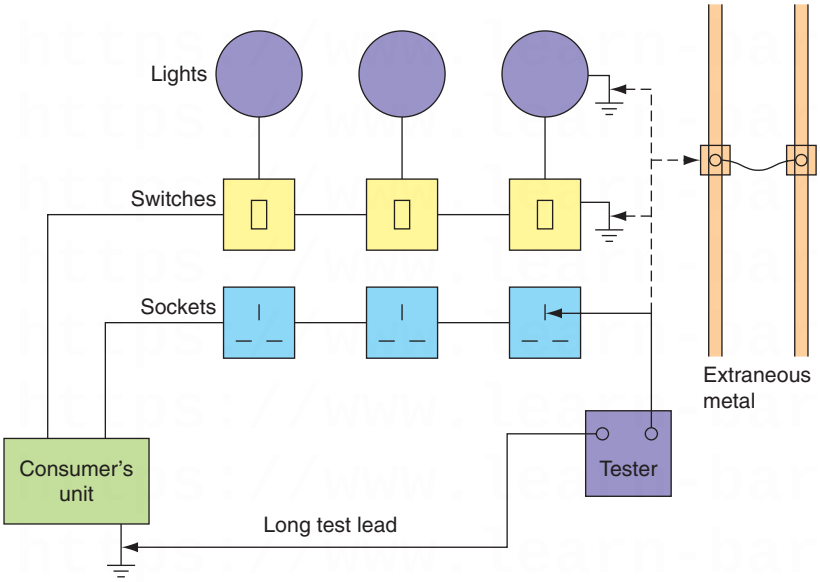

Figure 7.12 Testing continuity of protective conductors.

Table 7.1 Resistance values of some metallic containers

Metallic sheath	Size (mm)	Resistance at 20°C (mΩ/m)
Conduit	20	1.25
	25	1.14
	32	0.85
Trunking	50 × 50	0.949
	75 × 75	0.526
	100 × 100	0.337

If, after carrying out this further test, the inspecting engineer still questions the quality and soundness of the protective conductor formed by the metallic conduit or trunking, then a further test can be done using an a.c. voltage not greater than 50 V at the frequency of the installation and a current approaching 1.5 times the design current of the circuit, but not greater than 25 A.

This test can be done using a low-voltage transformer and suitably connected ammeters and voltmeters, but a number of commercial instruments are available, such as the Clare tester, which give a direct reading in ohms.

Because fault currents will flow around the earth fault loop path, the measured resistance values must be low enough to allow the overcurrent protective device to operate quickly. For a satisfactory test result, the resistance of the protective conductor should be consistent with those values calculated for a line conductor of similar length and cross-sectional area. Values of resistance per metre for copper and aluminium conductors are given in Table 9A of the On Site Guide. The resistances of some other metallic containers are given in Table 7.1.

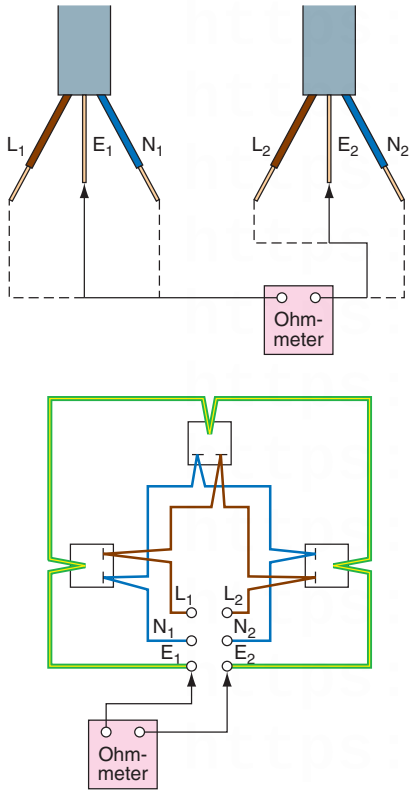

Figure 7.13 Step 1 test: measuring the resistance of phase, neutral and protective conductors.

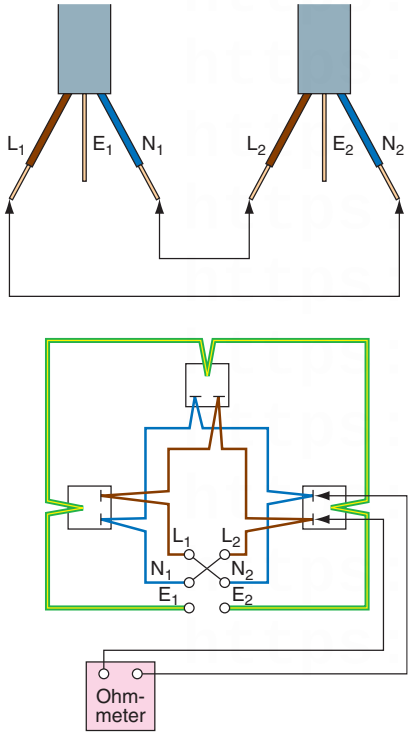

Figure 7.14 Step 2 test: connection of mains conductors and test circuit conditions.

Example

The CPC for a ring final circuit is formed by a 1.5 mm^2 copper conductor of 50 m approximate length. Determine a satisfactory continuity test value for the CPC using the value given in Table 9A of the On Site Guide.

Table 9A gives resistance/metre for a 1.5 mm^2 copper conductor
$= 12.10\,\text{m}\Omega/\text{m}$

Therefore, the resistance of 50 m $= 50 \times 12.10 \times 10^{-3}$
$= 0.605\,\Omega$

The protective conductor resistance values calculated by this method can only be an approximation since the length of the CPC can only be estimated. Therefore, in this case, a satisfactory test result would be obtained if the resistance of the protective conductor was about 0.6 Ω. A more precise result is indicated by the earth fault loop impedance test which is carried out later in the sequence of tests.

2 Testing for continuity of ring final circuit conductors (612.2.2)

The object of the test is to ensure that all ring circuit cables are continuous around the ring; that is, that there are no breaks and no interconnections in the ring, and that all connections are electrically and mechanically sound. This test also verifies the polarity of each socket outlet.

The test is made with the supply disconnected, using an ohmmeter as follows:

Disconnect and separate the conductors of both legs of the ring at the main fuse. There are three steps to this test:

Step 1

Measure the resistance of the line conductors (L_1 and L_2), the neutral conductors (N_1 and N_2) and the protective conductors (E_1 and E_2) at the mains position as shown in Fig. 7.13. End-to-end live and neutral conductor readings should be approximately the same (i.e. within 0.05 Ω) if the ring is continuous. The protective conductor reading will be 1.67 times as great as these readings if 2.5/1.5 mm cable is used. Record the results on a table such as that shown in Table 7.2.

Step 2

The live and neutral conductors should now be temporarily joined together as shown in Fig. 7.14. An ohmmeter reading should then be taken between live and neutral at *every* socket outlet on the ring circuit. The readings obtained should be substantially the same, provided that there are no breaks or multiple loops in the ring. Each reading should have a value of approximately half the live and neutral ohmmeter readings measured in Step 1 of this test. Sockets connected as a spur will have a slightly higher value of resistance because they are fed by only one cable, while each socket on the ring is fed by two cables. Record the results on a table such as that shown in Table 7.2.

Table 7.2 Table which may be used to record the readings taken when carrying out the continuity of ring final circuit conductors tests according to IEE Regulation 612.2.2

Test	Ohmmeter connected to	Ohmmeter readings	This gives a value for
Step 1	L_1 and L_2		r_1
	N_1 and N_2		
	E_1 and E_2		r_2
Step 2	Live and neutral at each socket		
Step 3	Live and earth at each socket		$R_1 + R_2$
As a check $(R_1 + R_2)$ value should equal $(r_1 + r_2)/4$.			

Step 3

Where the CPC is wired as a ring, for example where twin and earth cables or plastic conduit is used to wire the ring, temporarily join the live and CPCs together as shown in Fig. 7.15. An ohmmeter reading should then be taken between live and earth at *every* socket outlet on the ring. The readings obtained should be substantially the same provided that there are no breaks or multiple loops in the ring. This value is equal to $R_1 + R_2$ for the circuit. Record the results on an installation schedule such as that given in Appendix 6 of the IEE Regulations or a table such as that shown in Table 8.2. The Step 3 value of $R_1 + R_2$ should be equal to $(r_1 + r_2)/4$, where r_1 and r_2 are the ohmmeter readings from Step 1 of this test (see Table 7.2).

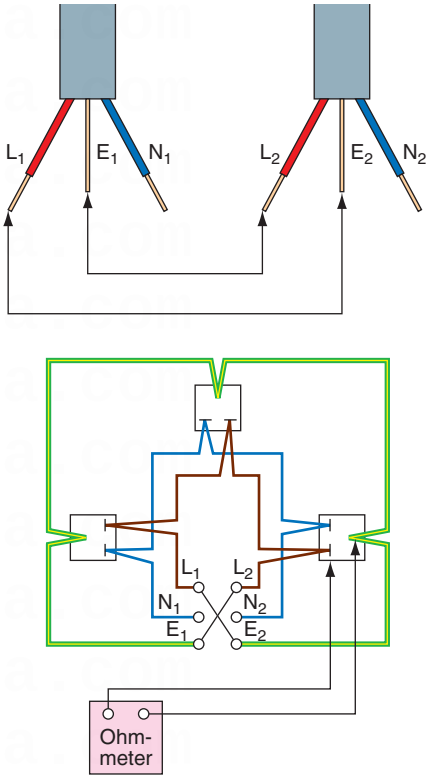

Figure 7.15 Step 3 test: connection of mains conductors and test circuit conditions.

3 Testing insulation resistance (612.3)

The object of the test is to verify that the quality of the insulation is satisfactory and has not deteriorated or short-circuited. The test should be made at the consumer's unit with the mains switch off, all fuses in place and all switches closed. Neon lamps, capacitors and electronic circuits should be disconnected, since they will respectively glow, charge up and be damaged by the test.

There are two tests to be carried out using an insulation resistance tester which must have a test voltage of 500 V d.c. for 230 V and 400 V installations. These are line and neutral conductors to earth and between line conductors. The procedures are:

Line and neutral conductors to earth:

1. Remove all lamps.
2. Close all switches and circuit breakers.
3. Disconnect appliances.
4. Test separately between the line conductor and earth *and* between the neutral conductor and earth, for *every* distribution circuit at the consumer's unit as shown in Fig. 7.16a. Record the results on a schedule of test results such as that given in Appendix 6 of the IEE Regulations.

Between line conductors:

1. Remove all lamps.
2. Close all switches and circuit breakers.

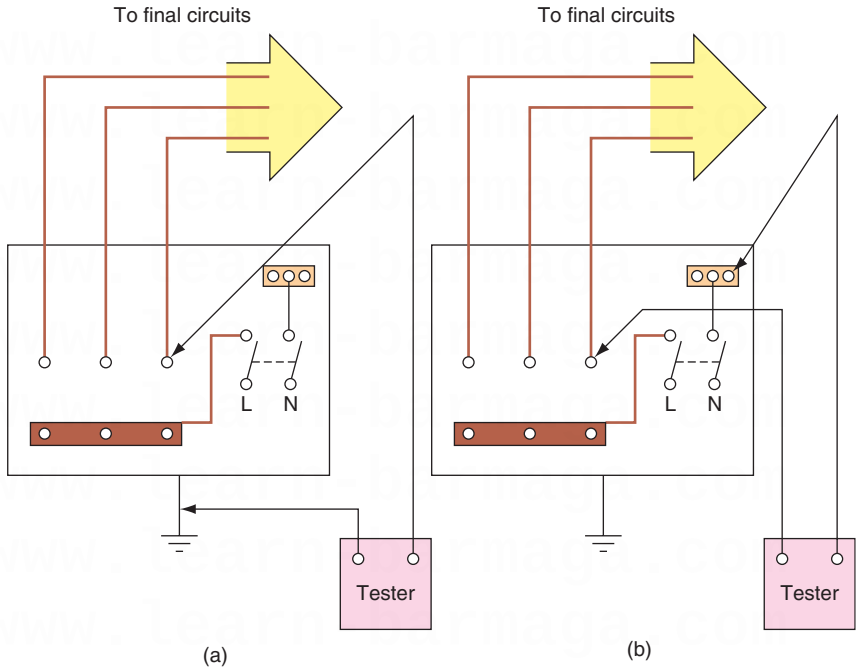

Figure 7.16 Insulation resistance test.

3 Disconnect appliances.
4 Test between line and neutral conductors of *every* distribution circuit at the consumer's unit as shown in Fig. 7.16b and record the result.

The insulation resistance readings for each test must be not less than 1.0 MΩ for a satisfactory result (IEE Regulation 612.3.2).

Where the circuit includes electronic equipment which might be damaged by the insulation resistance test, a measurement between all live conductors (i.e. live and neutral conductors connected together) and the earthing arrangements may be made. The insulation resistance of these tests should be not less than 1.0 MΩ (IEE Regulation 612.3.3).

Although an insulation resistance reading of 1.0 MΩ complies with the regulations, the IEE guidance notes tell us that much higher values than this can be expected and that a reading of less than 2 MΩ might indicate a latent, but not yet visible, fault in the installation. In these cases each circuit should be separately tested to obtain a reading greater than 2 MΩ.

4 Testing polarity (612.6)

The object of this test is to verify that all fuses, circuit breakers and switches are connected in the line or live conductor only, that all socket outlets are correctly wired and that Edison screw-type lampholders have the centre contact connected to the live conductor. It is important to make a polarity test on the installation since a visual inspection will only indicate conductor identification.

The test is done with the supply disconnected using an ohmmeter or continuity tester as follows:

1 Switch off the supply at the main switch.
2 Remove all lamps and appliances.
3 Fix a temporary link between the line and earth connections on the consumer's side of the main switch.

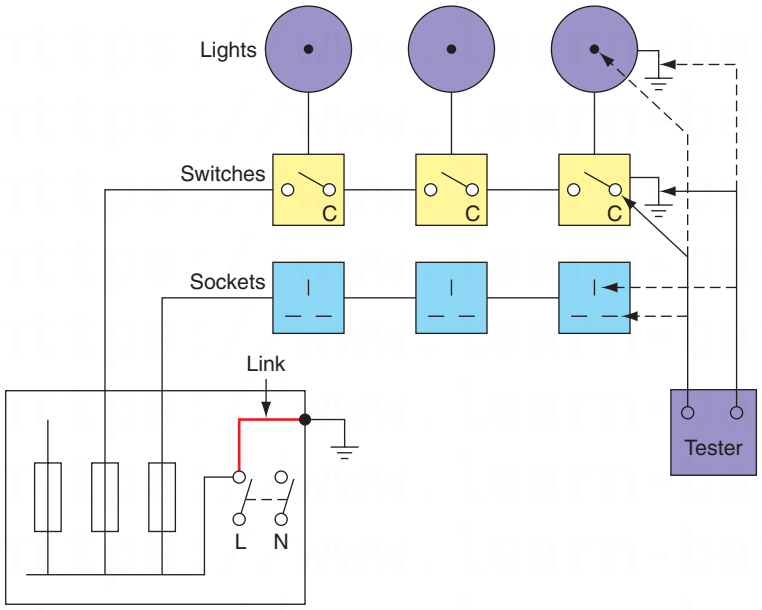

Figure 7.17 Polarity test.

4 Test between the 'common' terminal and earth at each switch position.
5 Test between the centre pin of any Edison screw lampholders and any convenient earth connection.
6 Test between the live pin (i.e. the pin to the right of earth) and earth at each socket outlet as shown in Fig. 7.17.

For a satisfactory test result the ohmmeter or continuity meter should read very close to zero for each test.

Remove the test link and record the results on a schedule of test results such as that given in Appendix 6 of the IEE Regulations.

5 Testing earth electrode resistance (612.7)

When an earth electrode has been sunk into the general mass of earth, it is necessary to verify the resistance of the electrode. The general mass of earth can be considered as a large conductor which is at zero potential. Connection to this mass through earth electrodes provides a reference point from which all other voltage levels can be measured. This is a technique which has been used for a long time in power distribution systems.

The resistance to earth of an electrode will depend upon its shape, size and the resistance of the soil. Earth rods form the most efficient electrodes. A rod of about 1 m will have an earth electrode resistance of between 10 and 200 Ω. Even in bad earthing conditions, a rod of about 2 m will normally have an earth electrode resistance which is less than 500 Ω in the United Kingdom. In countries which experience long dry periods of weather the earth electrode resistance may be thousands of ohms.

In the past, electrical engineers used the metal pipes of water mains as an earth electrode, but the recent increase in the use of PVC pipe for water mains now prevents the use of water pipes as the means of earthing in the United Kingdom, although this practice is still permitted in some countries. IEE Regulation 542.2.1 recognizes the use of the following types of earth electrodes:

- earth rods or pipes
- earth tapes or wires

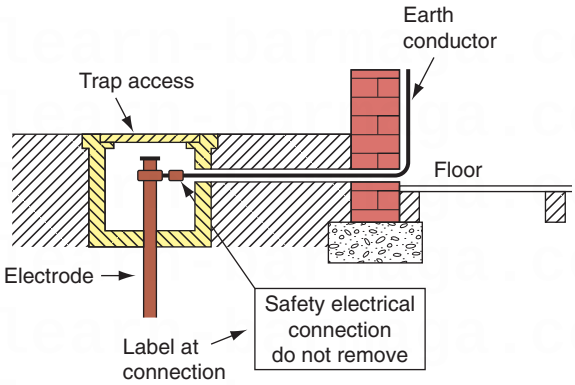

Figure 7.18 Termination of an earth electrode.

- earth plates
- earth electrodes embedded in foundations
- welded metallic reinforcement of concrete structures
- other suitable underground metalwork
- lead sheaths or other metallic coverings of cables.

The earth electrode is sunk into the ground, but the point of connection should remain accessible (IEE Regulation 542.4.2). The connection of the earthing conductor to the earth electrode must be securely made with a copper conductor complying with Table 54.1 and IEE Regulation 542.3.2 as shown in Fig. 7.18.

The installation site must be chosen so that the resistance of the earth electrode does not increase above the required value due to climatic conditions such as the soil drying out or freezing, or from the effects of corrosion (IEE Regulations 542.2.2 and 3).

Under fault conditions the voltage appearing at the earth electrode will radiate away from the electrode like the ripples radiating away from a pebble thrown into a pond. The voltage will fall to a safe level in the first 2 or 3 m away from the point of the earth electrode.

The basic method of measuring earth electrode resistance is to pass a current into the soil through the electrode and to measure the voltage required to produce this current.

IEE Regulation 612.9 demands that where earth electrodes are used they should be tested.

If the electrode under test forms part of the earth return for a TT installation in conjunction with an RCD, Guidance Note 3 of the IEE Regulations describes the following method:

1. Disconnect the installation protective equipotential bonding from the earth electrode to ensure that the test current passes only through the earth electrode.
2. Switch off the consumer's unit to isolate the installation.
3. Using a line earth loop impedance tester, test between the incoming line conductor and the earth electrode.
4. Reconnect the protective bonding conductors when the test is completed.

Record the result on a schedule of test results such as that given in Appendix 6 of the IEE Regulations.

The IEE Guidance Note 3 tells us that an acceptable value for the measurement of the earth electrode resistance would be less than 200 Ω.

Providing the first five tests were satisfactory, the supply may now be switched on and the final tests completed with the supply connected.

6 Testing polarity – supply connected

Using an approved voltage indicator such as that shown at Fig. 7.7 or test lamp and probes which comply with the HSE Guidance Note GS 38, again carry out a polarity test to verify that all fuses, circuit breakers and switches are connected in the live conductor. Test from the common terminal of switches to earth, the live pin of each socket outlet to earth and the centre pin of any Edison screw lampholders to earth. In each case the voltmeter or test lamp should indicate the supply voltage for a satisfactory result.

7 Testing earth fault loop impedance – supply connected (612.9)

The object of this test is to verify that the impedance of the whole earth fault current loop line to earth is low enough to allow the overcurrent protective device to operate within the disconnection time requirements of IEE Regulations 411.3.2.2, 411.4.6 and 411.4.7, should a fault occur.

The whole earth fault current loop examined by this test is comprised of all the installation protective conductors, the main protective earthing terminal and protective earth conductors, the earthed neutral point and the secondary winding of the supply transformer and the line conductor from the transformer to the point of the fault in the installation.

The test will, in most cases, be done with a purpose-made line earth loop impedance tester which circulates a current in excess of 10 A around the loop for a very short time, so reducing the danger of a faulty circuit. The test is made with the supply switched on, and carried out from the furthest point of *every* final circuit, including lighting, socket outlets and any fixed appliances. Record the results on a schedule of test results.

Purpose-built testers give a readout in ohms and a satisfactory result is obtained when the loop impedance does not exceed the appropriate values given in Tables 41.2 and 41.3 of the IEE Regulations.

8 Additional protection: Testing of RCD – supply connected (612.10)

The object of the test is to verify the effectiveness of the RCD, that it is operating with the correct sensitivity and proving the integrity of the electrical and mechanical elements. The test must simulate an appropriate fault condition and be independent of any test facility incorporated in the device.

When carrying out the test, all loads normally supplied through the device are disconnected.

The testing of a ring circuit protected by a general-purpose RCD to BS EN 61008 in a split-board consumer unit is carried out as follows:

1. Using the standard lead supplied with the test instrument, disconnect all other loads and plug in the test lead to the socket at the centre of the ring (i.e. the socket at the furthest point from the source of supply).
2. Set the test instrument to the tripping current of the device and at a phase angle of 0°.
3. Press the test button – the RCD should trip and disconnect the supply within 200 ms.

4 Change the phase angle from 0° to 180° and press the test button once again. The RCD should again trip within 200 ms. Record the highest value of these two results on a schedule of test results such as that given in Appendix 6 of the IEE Regulations.
5 Now set the test instrument to 50% of the rated tripping current of the RCD and press the test button. The RCD should *not trip* within 2 seconds. This test is testing the RCD for inconvenience or nuisance tripping.
6 Finally, the effective operation of the test button incorporated within the RCD should be tested to prove the integrity of the mechanical elements in the tripping device. This test should be repeated every 3 months.

If the RCD fails any of the above tests it should be changed for a new one.

Where the RCD has a rated tripping current not exceeding 30 mA and has been installed to reduce the risk associated with 'basic' and/or 'fault' protection, as indicated in IEE Regulation 411.1, a residual current of 150 mA should cause the circuit breaker to open within 40 ms.

Certification and reporting

Following the completion of all new electrical work or additional work to an existing installation, the installation must be inspected and tested and an installation certificate issued and signed by a competent person. The 'competent person' must have a sound knowledge of the type of work undertaken, be fully versed in the inspection and testing procedures contained in the IEE Regulations (BS 7671) and employ adequate testing equipment.

A certificate and test results shall be issued to those ordering the work in the format given in Appendix 6 of the IEE Regulations.

All installations must be periodically tested and inspected, and for this purpose a periodic inspection report should be issued (IEE Regulation 631.2). The standard format is again shown in Appendix 6 of the IEE Regulations.

In both cases the certificate must include the test values which verify that the installation complies with the IEE Regulations at the time of testing.

Suggested frequency of periodic inspection intervals are given below:

- Domestic installations – 10 years
- Commercial installations – 5 years
- Industrial installations – 3 years
- Agricultural installations – 3 years
- Caravan site installations – 1 year
- Caravans – 3 years
- Temporary installations on construction sites – 3 months.

Safe working procedures when testing

Whether you are carrying out the test procedure (i) as a part of a new installation (ii) upon the completion of an extension to an existing installation (iii) because you are trying to discover the cause of a fault on an installation or (iv) because you are carrying out a periodic test and inspection of a building, you must always be aware of your safety, the safety of others using the building and the possible damage which your testing might cause to other systems in the building.

For your own safety:

- Always use 'approved' test instruments and probes.
- Ensure that the test instrument carries a valid calibration certificate otherwise the results may be invalid.
- Secure all isolation devices in the 'off' position.
- Put up warning notices so that other workers will know what is happening.
- Notify everyone in the building that testing is about to start and for approximately how long it will continue.
- Obtain a 'permit-to-work' if this is relevant.
- Obtain approval to have systems shut down which might be damaged by your testing activities. For example, computer systems may 'crash' when supplies are switched off. Ventilation and fume extraction systems will stop working when you disconnect the supplies.

For the safety of other people:

- Fix warning notices around your work area.
- Use cones and highly visible warning tape to screen off your work area.
- Make an effort to let everyone in the building know that testing is about to begin. You might be able to do this while you carry out the initial inspection of the installation.
- Obtain verbal or written authorization to shut down information technology, emergency operation or stand-by circuits.

To safeguard other systems:

- Computer systems can be severely damaged by a loss of supply or the injection of a high test voltage from, for example, an insulation resistance test. Computer systems would normally be disconnected during the test period but this will generally require some organization before the testing begins. Commercial organizations may be unable to continue to work without their computer systems and, in these circumstances, it may be necessary to test outside the normal working day.
- Any resistance measurements made on electronic equipment or electronic circuits must be achieved with a battery-operated ohmmeter in order to avoid damaging the electronic circuits.
- Farm animals are creatures of habit and may become very grumpy to find you testing their milking parlour equipment at milking time.
- Hospitals and factories may have emergency stand-by generators which re-energize essential circuits in the event of a mains failure. Your isolation of the circuit for testing may cause the emergency systems to operate. Discuss any special systems with the person authorizing the work before testing begins.

Portable appliance testing

A quarter of all serious electrical accidents involve portable electrical appliances; that is, equipment which has a cable lead and plug and which is normally moved around or can easily be moved from place to place. This includes, for example, floor cleaners, kettles, heaters, portable power tools, fans, televisions, desk lamps, photocopiers, fax machines and desktop computers. There is a requirement under the Health and Safety at Work Act for employers to take adequate steps to protect users of portable appliances from the hazards of electric shock and fire. The responsibility for safety applies equally to small as

well as large companies. The Electricity at Work Regulations 1989 also place a duty of care upon employers to ensure that the risks associated with the use of electrical equipment are controlled.

Against this background the HSE has produced guidance notes HS(G) 107 *Maintaining Portable and Transportable Electrical Equipment* and leaflets *Maintaining Portable Electrical Equipment in Offices* and *Maintaining Portable Electrical Equipment in Hotels and Tourist Accommodation.* In these publications the HSE recommends that a three-level system of inspection can give cost-effective maintenance of portable appliances. These are:

- user checking;
- visual inspection by an appointed person;
- combined inspection and testing by a competent person or contractor.

A user visually checking the equipment is probably the most important maintenance procedure. About 95% of faults or damage can be identified by just looking. The user should check for obvious damage using common sense. The use of potentially dangerous equipment can then be avoided. Possible dangers to look for are as follows:

- Damage to the power cable or lead which exposes the colours of the internal conductors, which are brown, blue and green with a yellow stripe.
- Damage to the plug itself. The plug pushes into the wall socket, usually a square pin 13 A socket in the United Kingdom, to make an electrical connection. With the plug removed from the socket the equipment is usually electrically 'dead'. If the bakelite plastic casing of the plug is cracked, broken or burned, or the contact pins are bent, do not use it.
- Non-standard joints in the power cable, such as taped joints.
- Poor cable retention. The outer sheath of the power cable must be secured and enter the plug at one end and the equipment at the other. The coloured internal conductors must not be visible at either end.
- Damage to the casing of the equipment such as cracks, pieces missing, loose or missing screws or signs of melted plastic, burning, scorching or discolouration.
- Equipment which has previously been used in unsuitable conditions such as a wet or dusty environment.

If any of the above dangers are present, the equipment should not be used until the person appointed by the company to make a 'visual inspection' has had an opportunity to do so.

A **visual inspection** will be carried out by an appointed person within a company, such person having been trained to carry out this task. In addition to the user checks described above, an inspection could include the removal of the plug top cover to check that:

- a fuse of the correct rating is being used and also that a proper cartridge fuse is being used and not a piece of wire, a nail or silver paper;
- the cord grip is holding the sheath of the cable and not the coloured conductors;
- the wires (conductors) are connected to the correct terminals of the plug top as shown in Fig. 7.19;
- the coloured insulation of each conductor wire goes right up to the terminal so that no bare wire is visible;

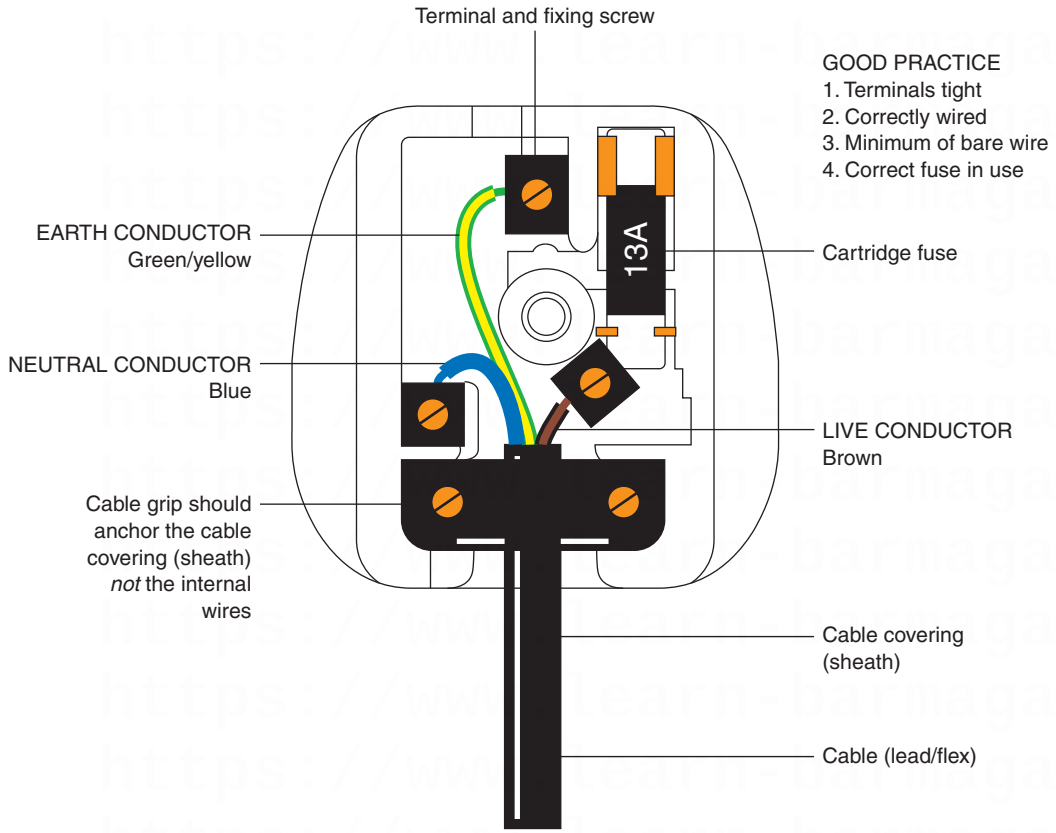

Figure 7.19 Correct connection of plug.

- the terminal fixing screws hold the conductor wires securely and the screws are tight;
- all the conductor wires are secured within the terminal;
- there are no internal signs of damage such as overheating, excessive 'blowing' of the cartridge fuse or the intrusion of foreign bodies such as dust, dirt or liquids.

The above inspection cannot apply to 'moulded plugs', which are moulded on to the flexible cable by the manufacturer in order to prevent some of the bad practice described above. In the case of a moulded plug top, only the fuse can be checked. The visual inspection checks described above should also be applied to extension leads and their plugs. The HSE recommends that a simple procedure be written to give guidance to the 'appointed person' carrying out the visual inspection.

Combined inspection and testing is also necessary on some equipment because some faults cannot be seen by just looking – for example, the continuity and effectiveness of earth paths. For some portable appliances the earth is essential to the safe use of the equipment and, therefore, all earthed equipment and most extension leads should be periodically tested and inspected for these faults. All portable appliance test instruments (PAT Testers) will carry out two important tests, earth bonding and insulation resistance.

Earth bonding tests apply a substantial test current, typically about 25 A, down the earth pin of the plug top to an earth probe, which should be connected to

any exposed metalwork on the portable appliance being tested. The PAT Tester will then calculate the resistance of the earth bond and either give an actual reading or indicate pass or fail. A satisfactory result for this test would typically be a reading of less than 0.1 Ω. The earth bond test is, of course, not required for double insulated portable appliances because there will be no earthed metalwork.

Insulation resistance tests apply a substantial test voltage, typically 500 V, between the live and neutral bonded together and the earth. The PAT Tester then calculates the insulation resistance and either gives an actual reading or indicates pass or fail. A satisfactory result for this test would typically be a reading greater than 2 MΩ.

Some PAT Testers offer other tests in addition to the two described above. These are described below.

A flash test tests the insulation resistance at a higher voltage than the 500 V test described above. The flash test uses 1.5 kV for Class 1 portable appliances, that is earthed appliances, and 3 kV for Class 2 appliances, which are double insulated. The test establishes that the insulation will remain satisfactory under more stringent conditions but must be used with caution, since it may overstress the insulation and will damage electronic equipment. A satisfactory result for this test would typically be less than 3 mA.

A fuse test tests that a fuse is in place and that the portable appliance is switched on prior to carrying out other tests. A visual inspection will be required to establish that the *size* of the fuse is appropriate for that particular portable appliance.

An earth leakage test measures the leakage current to earth through the insulation. It is a useful test to ensure that the portable appliance is not deteriorating and liable to become unsafe. It also ensures that the tested appliances are not responsible for nuisance 'tripping' of RCDs (RCDs – see Chapter 4). A satisfactory reading is typically less than 3 mA.

An operation test proves that the preceding tests were valid (i.e. that the unit was switched on for the tests), that the appliances will work when connected to the appropriate voltage supply and will not draw a dangerously high current from that supply. A satisfactory result for this test would typically be less than 3.2 kW for 230 V equipment and less than 1.8 kW for 110 V equipment.

All PAT Testers are supplied with an operating manual, giving step-by-step instructions for their use and pass and fail scale readings. The HSE suggested intervals for the three levels of checking and inspection of portable appliances in offices and other low-risk environments are given in Table 7.3.

Who does what?

When actual checking, inspecting and testing of portable appliances takes place, will depend upon the company's safety policy and risk assessments. In low-risk environments such as offices and schools, the three-level system of checking, inspection and testing recommended by the HSE should be carried out. Everyone can use common sense and carry out the user checks described earlier. Visual inspections must be carried out by a 'competent person' but that person does not need to be an electrician or electronics service engineer. Any sensible member of staff who has received training can carry out this duty. They will need to know what to look for and what to do, but more importantly, they will need to be able to avoid danger to themselves and to others. The HSE recommends that the appointed

Table 7.3 HSE suggested intervals for checking, inspecting and testing of portable appliances in offices and other low-risk environments

Equipment/ environment	User checks	Formal visual inspection	Combined visual inspection and electrical testing
Battery-operated: (less than 20 V)	No	No	No
Extra low voltage: (less than 50 V a.c.) e.g. telephone equipment, low voltage desk lights	No	No	No
Information technology: e.g. desktop computers, VDU screens	No	Yes, 2–4 years	No if double insulated – otherwise up to 5 years
Photocopiers, fax machines: *not* hand-held, rarely moved	No	Yes, 2–4 years	No if double insulated – otherwise up to 5 years
Double insulated equipment: *not* hand-held, moved occasionally, e.g. fans, table lamps, slide projectors	No	Yes, 2–4 years	No
Double insulated equipment: *hand-held*, e.g. power tools	Yes	Yes, 6 months to 1 year	No
Earthed equipment (Class 1): e.g. electric kettles, some floor cleaners, power tools	Yes	Yes, 6 months to 1 year	Yes, 1–2 years
Cables (leads) and plugs connected to the above	Yes	Yes, 6 months to 4 years depending on the type of equipment it is connected to	Yes, 1–5 years depending on the type of equipment it is connected to
Extension leads (mains voltage)	Yes	As above	As above

Safety first

Power tools

- Look at the power tools that you use at work.
- Do they have a PAT Test label?
- Is it 'in date'?

person follows a simple written procedure for each visual inspection. A simple tick sheet would meet this requirement. For example:

1. Is the correct fuse fitted? Yes/No
2. Is the cord grip holding the cable sheath? Yes/No

The tick sheet should incorporate all the appropriate visual checks and inspections described earlier.

Testing and inspection require a much greater knowledge than is required for simple checks and visual inspections. This more complex task need not

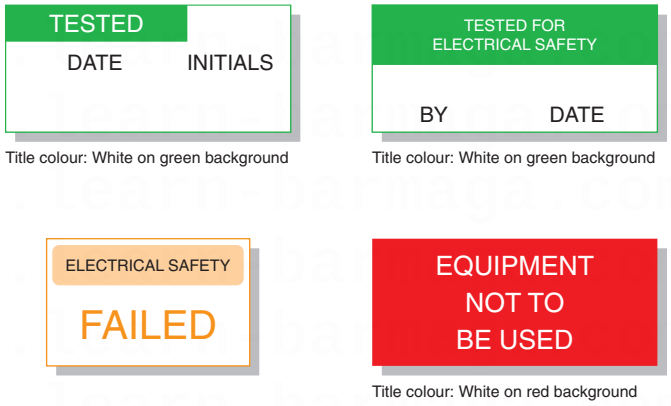

Figure 7.20 Typical PAT test labels.

necessarily be carried out by a qualified electrician or electronics service engineer. However, the person carrying out the test must be trained to use the equipment and to interpret the results. Also, greater knowledge will be required for the inspection of the range of portable appliances which might be tested.

Keeping records

Records of the inspecting and testing of portable appliances are not required by law but within the Electricity at Work Regulations 1989 it is generally accepted that some form of recording of results is required to implement a quality control system. The control system should:

- ensure that someone is nominated to have responsibility for portable appliance inspection and testing;
- maintain a log or register of all portable appliance test results to ensure that equipment is inspected and tested when it is due;
- label tested equipment with the due date for its next inspection and test as shown in Fig. 7.20.

Any piece of equipment which fails a PAT Test should be disabled and taken out of service (usually by cutting off the plug), labelled as faulty and sent for repair.

The register of PAT Test results will help managers to review their maintenance procedures and the frequency of future visual inspections and testing. Combined inspection and testing should be carried out where there is a reason to suspect that the equipment may be faulty, damaged or contaminated but this cannot be verified by visual inspection alone. Inspection and testing should also be carried out after any repair or modification to establish the integrity of the equipment or at the start of a maintenance system, to establish the initial condition of the portable equipment being used by the company.

Commissioning electrical systems

The commissioning of the electrical and mechanical systems within a building is a part of the 'handing-over' process of the new building by the architect and main contractor to the client or customer in readiness for its occupation and intended use. To 'commission' means to give authority to someone to check that everything is in working order. If it is out of commission, it is not in working order.

Following the completion, inspection and testing of the new electrical installation, the functional operation of all the electrical systems must be tested before they are handed over to the customer. It is during the commissioning period that any design or equipment failures become apparent, and this testing is one of the few quality controls possible on a building services installation.

This is the role of the commissioning engineer, who must assure himself that all the systems are in working order and that they work as they were designed to work. He must also instruct the client's representative, or the staff who will use the equipment, in the correct operation of the systems, as part of the handover arrangements.

The commissioning engineer must test the operation of all the electrical systems, including the motor controls, the fan and air conditioning systems, the fire alarm and emergency lighting systems. However, before testing the emergency systems, he must first notify everyone in the building of his intentions so that alarms may be ignored during the period of testing.

Commissioning has become one of the most important functions within the building project's completion sequence. The commissioning engineer will therefore have access to all relevant contract documents, including the building specifications and the electrical installation certificates as required by the IEE Regulations (BS 7671), and have a knowledge of the requirements of the Electricity at Work Regulations and the Health and Safety at Work Act.

The building will only be handed over to the client if the commissioning engineer is satisfied that all the building services meet the design specification in the contract documents.

Check your understanding

When you have completed these questions, check out the answers at the back of the book.

Note: more than one multiple choice answer may be correct.

1 A tong test instrument can also correctly be called:
   a. a continuity tester
   b. a clip-on ammeter
   c. an insulation resistance tester
   d. a voltage indicator.

2 All electrical test probes and leads must comply with the standards set by the:
   a. BS EN 60898
   b. BS 7671
   c. HSE Guidance Note GS 38
   d. IEE Regulations Part 2.

3 When making a test to determine the presence or absence of a voltage, the HSE recommends that for our own safety we should use:
   a. any old tester bought at a car-boot sale
   b. a multimeter set to the correct voltage
   c. a proprietary test lamp
   d. a voltage indicator.

4 For electrical test results to be valid the test instruments used:
   a. must be new
   b. must be of an approved type
   c. must have a calibration certificate
   d. must have a digital readout.

5 The test required by the IEE Regulations to ascertain that the CPC is correctly connected is called:
   a. a basic protection
   b. continuity of ring final circuit conductors
   c. continuity of protective conductors
   d. earth electrode resistance.

6 One objective of the polarity test is to verify that:
   a. lampholders are correctly earthed
   b. final circuits are correctly fused
   c. the CPC is continuous throughout the installation
   d. the protective devices are connected in the live conductor.

7 When testing a 230 V installation an insulation resistance tester must supply a voltage of:
   a. less than 50 V
   b. 500 V
   c. less than 500 V
   d. greater than twice the supply voltage but less than 1000 V.

8 The value of a satisfactory insulation resistance test on each final circuit of a 230 V installation must be:
   a. less than 1 Ω
   b. less than 0.5 MΩ
   c. not less than 0.5 MΩ
   d. not less than 1 MΩ

9 Instrument calibration certificates are usually valid for a period of:
   a. 3 months
   b. 1 year
   c. 3 years
   d. 5 years.

10 The maximum inspection and re-test period for a domestic electrical installation is:
   a. 3 months
   b. 3 years
   c. 5 years
   d. 10 years.

11 A visual inspection of a new installation must be carried out:
   a. during the erection period
   b. during testing upon completion
   c. after testing upon completion
   d. before testing upon completion.

12 'To ensure that all the systems within a building work as they were intended to work' is one definition of the purpose of:
   a. testing electrical equipment
   b. inspecting electrical systems
   c. commissioning electrical systems
   d. isolating electrical systems.

13 Use bullet points to state three reasons for testing a new electrical installation.

14 State five of the most important safety factors to be considered before electrical testing begins.

15 State the seven requirements of GS 38 when selecting probes, voltage indicators and measuring instruments.

16 Use bullet points to describe a safe isolation procedure of a final circuit fed from an MCB in a distribution board.

17 IEE Regulation 611.3 gives a checklist of about twenty items to be considered in the initial visual inspection of an electrical installation. Make

a list of ten of the most important items to be considered in the visual inspection process. (Perhaps by joining together similar items.)

18 State three reasons why electricians must only use 'approved' test instruments.

19 State the first five tests to be carried out on a new electrical installation following a satisfactory 'inspection'. For each test:
   i. state the object (reason for) the test
   ii. state a satisfactory test result.

20 State the certification process for a
   i. new electrical installation and
   ii. an electrical installation that is being re-tested as a part of the periodic inspection process
   iii. what will be indicated on the test certificates
   iv. who will receive the test certificates and
   v. who will issue the certificates
   vi. Finally, who will carry out the actual testing (A.....person).

21 State three safe working procedures relevant to your own safety when carrying out electrical testing.

22 State three safe working procedures relevant to the safety of other people when carrying out electrical testing.

23 State three safe working procedures relevant to the safety of other electrical systems when carrying out electrical testing.

24 State the two important tests that a PAT tester carries out on a portable appliance.

25 Use bullet points to state the reasons for commissioning a new building upon its completion.

CHAPTER 8

Fault diagnosis and repair

Unit 308 of the City and Guilds 2357 syllabus

Understanding the principles, practices and legislation for diagnosing and correcting electrical faults in electrotechnical systems and equipment in buildings, structures and the environment.

Online Material WWW

This chapter has free associated content, including animations and instructional videos, to support your learning

When you see the logo, visit the website below to access this material:

www.elsevierdirect.com/companions/9780080966281

To diagnose and find faults in electrical installations and equipment is probably one of the most difficult tasks undertaken by an electrician. The knowledge of fault finding and the diagnosis of faults can never be completely 'learned' because no two fault situations are exactly the same. As the systems we install become more complex, then the faults developed on these systems become more complicated to solve. To be successful the individual must have a thorough knowledge of the installation or piece of equipment and have a broad range of the skills and competences associated with the electrotechnical industries.

The ideal person will tackle the problem using a reasoned and logical approach, recognize his own limitations and seek help and guidance where necessary.

The tests recommended by the IEE Regulations can be used as a diagnostic tool but the safe working practices described by the Electricity at Work Regulations and elsewhere must always be observed during the fault-finding procedures.

If possible, fault finding should be planned ahead to avoid inconvenience to other workers and to avoid disruption of the normal working routine. **However, a faulty piece of equipment or a fault in the installation is not normally a planned event and usually occurs at the most inconvenient time.** The diagnosis and rectification of a fault is therefore often carried out in very stressful circumstances.

Basic Electrical Installation Work. 978-0-08-096628-1

Symptoms of an electrical fault

The basic symptoms of an electrical fault may be described in one or a combination of the following ways:

1. There is a complete loss of power.
2. There is partial or localized loss of power.
3. The installation or piece of equipment is failing because of the following:
   - an individual component is failing;
   - the whole plant or piece of equipment is failing;
   - the insulation resistance is low;
   - the overload or protective devices operate frequently;
   - electromagnetic relays will not latch, giving an indication of undervoltage.

Causes of electrical faults

Definition

A *fault* is not a natural occurrence; it is an unplanned event which occurs unexpectedly.

A **fault** *is not a natural occurrence; it is an unplanned event which occurs unexpectedly.* The fault in an electrical installation or piece of equipment may be caused by:

- negligence – that is, lack of proper care and attention;
- misuse – that is, not using the equipment properly or correctly;
- abuse – that is, deliberate ill-treatment of the equipment.

If the installation was properly designed in the first instance to perform the tasks required of it by the user, then the *negligence, misuse or abuse* must be the fault of the user. However, if the installation does not perform the tasks required of it by the user, then the negligence is due to the electrical contractor not designing the installation to meet the needs of the user.

Negligence on the part of the user may be due to insufficient maintenance or lack of general care and attention, such as not repairing broken equipment or removing covers or enclosures which were designed to prevent the ingress of dust or moisture.

Misuse of an installation or piece of equipment may occur because the installation is being asked to do more than it was originally designed to do, because of the expansion of a company, for example. Circuits are sometimes overloaded because a company grows and a greater demand is placed on the existing installation by the introduction of new or additional machinery and equipment.

Where do electrical faults occur?

1. Faults occur in wiring systems, but not usually along the length of the cable, unless it has been damaged by a recent event such as an object being driven through it or a JCB digger pulling up an underground cable. Cable faults usually occur at each end, where the human hand has been at work at the point of cable interconnections. This might result in broken conductors, trapped conductors or loose connections in joint boxes, accessories or luminaires.

   All cable connections must be made mechanically and electrically secure. They must also remain accessible for future inspection, testing and

maintenance (IEE Regulation 526.3). The only exceptions to this rule are when:

- underground cables are connected in a compound-filled or encapsulated joint;
- floor warming or ceiling warming heating systems are connected to a cold tail;
- a joint is made by welding, brazing, soldering or a compression tool.

Since they are accessible, cable interconnections are an obvious point of investigation when searching out the cause of a fault.

2 Faults also occur at cable terminations. The IEE Regulations require that a cable termination of any kind must securely anchor all conductors to reduce mechanical stresses on the terminal connections. All conductors of flexible cords must be terminated within the terminal connection otherwise the current carrying capacity of the conductor is reduced, which may cause local heating. Flexible cords are delicate – has the terminal screw been over-tightened, thus breaking the connection as the conductors flex or vibrate? Cables and flexible cords must be suitable for the temperature to be encountered at the point of termination or must be provided with additional insulation sleeves to make them suitable for the surrounding temperatures (IEE Regulation 522.2).

3 Faults also occur at accessories such as switches, sockets, control gear, motor contactors or at the point of connection with electronic equipment. The source of a possible fault is again at the point of human contact with the electrical system and again the connections must be checked as described in the first two points above. Contacts that make and break a circuit are another source of wear and possible failure, so switches and motor contactors may fail after extensive use. Socket outlets that have been used extensively and loaded to capacity, in say kitchens, are another source of fault due to overheating or loose connections. Electronic equipment can be damaged by the standard tests described in the IEE Regulations and must, therefore, be disconnected before testing begins.

4 Faults occur on instrumentation panels either as a result of a faulty instrument or as a result of a faulty monitoring probe connected to the instrument. Many panel instruments are standard sizes connected to CTs or VTs and this is another source of possible faults of the types described in points 1–3.

5 Faults occur in protective devices for the reasons given in points 1–3 above but also because they may have been badly selected for the job in hand and do not offer adequate protection or discrimination as described in Chapter 4 of this book.

6 Faults often occur in luminaires (light fittings) because the lamp has expired. Discharge lighting (fluorescent fittings) also require a ‘starter’ to be in good condition, although many fluorescent luminaires these days use starter-less electronic control gear. The points made in 1–3 about cable and flexible cord connections are also relevant to luminaire faults.

7 Faults occur when terminating flexible cords as a result of the flexible cable being of a smaller cross-section than the load demands, because it is not adequately anchored to reduce mechanical stresses on the connection or because the flexible cord is not suitable for the ambient temperature to be encountered at the point of connection. When terminating flexible cords, the insulation should be carefully removed without cutting out any flexible cord strands of wire because this effectively reduces the cross-section of the conductor. The conductor strands should be twisted together and then doubled over, if possible, and terminated in the appropriate connection.

Safety first

Cable fault

- faults do occur in wiring systems,
- but not usually along the cable length,
- faults usually occur at each end,
- where the human hand has been at work making connections.

The connection screws should be opened fully so that they will not snag the flexible cord as it is eased into the connection. The insulation should go up to, but not into, the termination. The terminal screws should then be tightened.

8 Faults occur in electrical components, equipment and accessories such as motors, starters, switch gear, control gear, distribution panels, switches, sockets and luminaires because these all have points at which electrical connections are made. It is unusual for an electrical component to become faulty when it is relatively new because it will have been manufactured and tested to comply with the appropriate British Standard. Through overuse or misuse components and equipment do become faulty but most faults are caused by poor installation techniques.

Modern electrical installations using new materials can now last longer than fifty years. Therefore, they must be properly installed. Good design, good workmanship and the use of proper materials are essential if the installation is to comply with the relevant regulations (IEE Regulations 133.1.1 and 134.1.1).

Fault finding

Before an electrician can begin to diagnose the cause of a fault he must:

- have a thorough knowledge and understanding of the electrical installation or electrical equipment;
- collect information about the fault and the events occurring at or about the time of the fault from the people who were in the area at the time;
- begin to predict the probable cause of the fault using his own and other people's skills and expertise;
- test some of the predictions using a logical approach to identify the cause of the fault.

Most importantly, electricians must use their detailed knowledge of electrical circuits and equipment learned through training and experience and then apply this knowledge to look for a solution to the fault.

Let us, therefore, now briefly consider some of the basic wiring circuits.

Lighting circuits

Table 1A in Appendix 1 of the *On Site Guide* deals with the assumed current demand of points, and states that for lighting outlets we should assume a current equivalent to a minimum of 100 W per lampholder. This means that for a domestic lighting circuit rated at 5A, a maximum of 11 lighting outlets could be connected to each circuit. In practice, it is usual to divide the fixed lighting outlets into a convenient number of circuits of seven or eight outlets each. In this way the whole installation is not plunged into darkness if one lighting circuit fuses (IEE Regulation 314.1).

Lighting circuits are usually wired in 1.0 or 1.5 mm cable using either a loop-in or joint-box method of installation. The loop-in method is universally employed with conduit installations or when access from above or below is prohibited after installation, as is the case with some industrial installations or blocks of flats. In this method the only joints are at the switches or lighting points, the live conductors being looped from switch to switch and the neutrals from one lighting point to another.

The use of junction boxes with fixed brass terminals is the method often adopted in domestic installations, since the joint boxes can be made accessible but are out of site in the loft area and under floorboards.

The live conductors must be broken at the switch position in order to comply with the IEE Regulations (612.7). A ceiling rose may only be connected to installations operating at 250 V maximum and must only accommodate one flexible cord unless it is specially designed to take more than one (IEE Regulations 559.6.1.2 and 3). Lampholders suspended from flexible cords must be capable of suspending the mass of the luminaire fixed to the lampholder (559.6.1.5).

The type of circuit used will depend upon the installation conditions and the customer's requirements. One light controlled by one switch is called one-way switch control. A room with two access doors might benefit from a two-way switch control so that the lights may be switched on or off at either position. A long staircase with more than two switches controlling the same lights would require intermediate switching.

One-way, two-way or intermediate switches can be obtained as plate switches for wall mounting or ceiling mounted cord switches. Cord switches can provide a convenient method of control in bedrooms or bathrooms and for independently controlling an office luminaire.

Socket outlet circuits

Where portable equipment is to be used, it should be connected by a plug to a conveniently accessible socket outlet (IEE Regulation 553.1.7). Pressing the plug into a socket outlet connects the appliance to the source of supply. **Socket outlets** therefore provide an easy and convenient method of connecting portable electrical appliances to a source of supply.

Definition

Socket outlets therefore provide an easy and convenient method of connecting portable electrical appliances to a source of supply.

Socket outlets can be obtained in 15, 13, 5 and 2A ratings, but the 13A flat pin type complying with BS 1363 is the most popular for domestic installations in the United Kingdom. Each 13A plug contains a cartridge fuse to give maximum potential protection to the flexible cord and the appliances which it serves.

Socket outlets may be wired on a ring or radial circuit and in order that every appliance can be fed from an adjacent and conveniently accessible socket outlet, the number of sockets is unlimited provided that the floor area covered by the circuit does not exceed that given in Appendix 15 of the IEE Regulations.

In a radial circuit each socket outlet is fed from the previous one. Live is connected to live, neutral to neutral and earth to earth at each socket outlet. The fuse and cable sizes are given in Appendix 15 but circuits may also be expressed with a block diagram, as shown in Fig. 8.1. The number of permitted socket

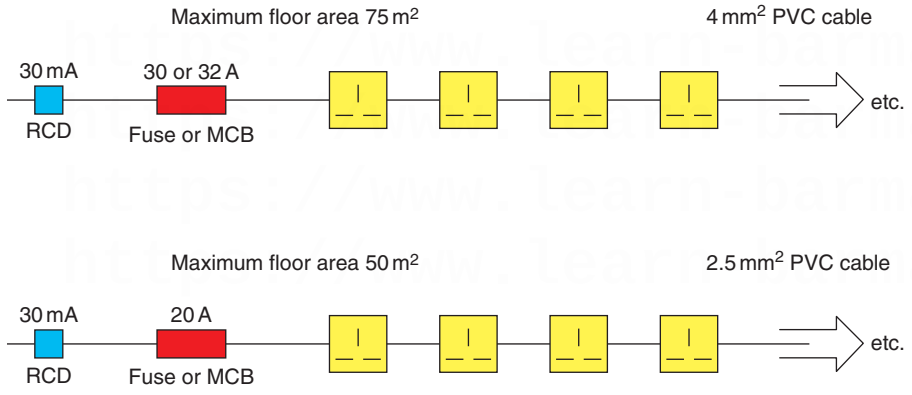

Figure 8.1 Block diagram of radial circuits.

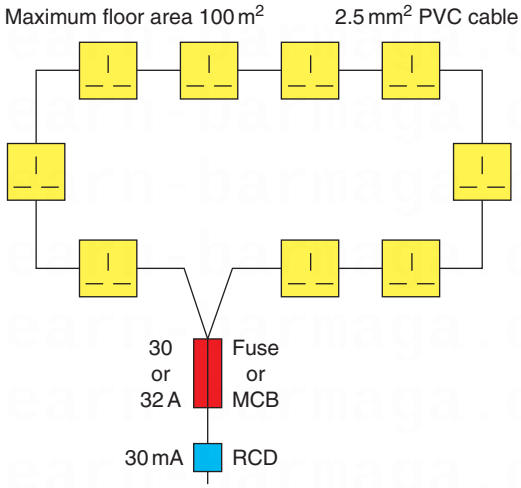

Figure 8.2 Block diagram of ring circuits.

outlets is unlimited but each radial circuit must not exceed the floor area stated and the known or estimated load.

Where two or more circuits are installed in the same premises, the socket outlets and permanently connected equipment should be reasonably shared out among the circuits, so that the total load is balanced.

When designing ring or radial circuits special consideration should be given to the loading in kitchens which may require separate circuits. This is because the maximum demand of current-using equipment in kitchens may exceed the rating of the circuit cable and protection devices.

Ring and radial circuits may be used for domestic or other premises where the maximum demand of the current-using equipment is estimated not to exceed the rating of the protective devices for the chosen circuit.

Ring circuits are very similar to radial circuits in that each socket outlet is fed from the previous one, but in ring circuits the last socket is wired back to the source of supply. Each ring final circuit conductor must be looped into every socket outlet or joint box which forms the ring and must be electrically continuous throughout its length. The number of permitted socket outlets is unlimited but each ring circuit must not cover more than 100 m^2 of floor area.

The circuit details are given in Appendix 15 of the IEE Regulations but may also be expressed by the block diagram given in Fig. 8.2.

Additional protection by 30 mA residual current device (RCD) is now required in addition to overcurrent protection for all socket outlet circuits that are to be used by ordinary persons and intended for general use.

This additional protection is provided in case basic protection or fault protection fails or if the user of the installation is careless (IEE Regulations 411.3.3 and 415.1.1).

Note: An ordinary person is one who is neither an electrically skilled nor an instructed person.

Safety first

Isolation
- NEVER work 'LIVE'
- Isolate
- Secure the isolation
- Prove the supply 'dead' before starting work.

Designing out faults

The designer of the installation cannot entirely design out the possibility of a fault occurring but he can design in 'damage limitation' should a fault occur.

For example designing in two, three or four lighting and power circuits will reduce the damaging effect of any one circuit failing because not all lighting and power will be lost as a result of a fault. Limiting faults to only one of many circuits is good practice because it limits the disruption caused by a fault. IEE Regulation 314 tells us to divide an installation into circuits as necessary so as to:

1. avoid danger and minimize inconvenience in the event of a fault occurring,
2. facilitate safe operation, inspection testing and maintenance.

Safety first

Socket outlets

All socket outlets used by ordinary persons intended for general use must have:

- 30 mA RCD protection
- IEE Regulations 411.3.3 and 415.1.1.

Requirements for successful electrical fault finding

The steps involved in successfully finding a fault can be summarized as follows:

1. Gather *information* by talking to people and looking at relevant sources of information such as manufacturer's data, circuit diagrams, charts and schedules.
2. *Analyse* the evidence and use standard tests and a visual inspection to predict the cause of the fault.
3. *Interpret* test results and diagnose the cause of the fault.
4. *Rectify* the fault.
5. *Carry out* functional tests to verify that the installation or piece of equipment is working correctly and that the fault has been rectified.

Requirements for safe working procedures

The following five safe working procedures must be applied before undertaking the fault diagnosis:

1. The circuits must be isolated using a 'safe isolation procedure', such as that described below.
2. All test equipment must be 'approved' and connected to the test circuits by recommended test probes as described by the Health and Safety Executive (HSE) Guidance Note GS 38 and shown in Fig. 8.3. The test equipment used must also be 'proved' on a known supply or by means of a proving unit such as that shown in Fig. 8.4.
3. Isolation devices must be 'secured' in the 'off' position as shown in Fig. 7.9. The key is retained by the person working on the isolated equipment.
4. Warning notices must be posted.
5. All relevant safety and functional tests must be completed before restoring the supply.

Live testing

The Electricity at Work Regulations tell us that it is 'preferable' that supplies be made dead before work commences (Regulation 4(3)). However, they do acknowledge that some work, such as fault finding and testing, may require the electrical equipment to remain energized. Therefore, if the fault finding and testing can only be successfully carried out 'live', then the person carrying out the fault diagnosis must:

- be trained so that he understands the equipment and the potential hazards of working live and can, therefore, be deemed to be 'competent' to carry out the activity;
- only use approved test equipment;

- set up barriers and warning notices so that the work activity does not create a situation dangerous to others.

Note that while live testing may be required in order to find the fault, live repair work must not be carried out. The individual circuit or item of equipment must first be isolated.

Secure electrical isolation

Definition

Isolation means the disconnection and separation of the electrical equipment from every source of electrical energy in such a way that this disconnection and separation is secure.

Electric shock occurs when a person becomes part of the electrical circuit. The level or intensity of the shock will depend upon many factors, such as age, fitness and the circumstances in which the shock is received. The lethal level is approximately 50 mA, above which muscles contract, the heart flutters and breathing stops. A shock above the 50 mA level is therefore fatal unless the person is quickly separated from the supply. Below 50 mA only an unpleasant tingling sensation may be experienced or you may be thrown across a room or shocked enough to fall from a roof or ladder, but the resulting fall may lead to serious injury.

To prevent people receiving an electric shock accidentally, all circuits contain protective devices. All exposed metal is earthed; fuses and miniature circuit breakers (MCBs) are designed to trip under fault conditions, and residual current devices (RCDs) are designed to trip below the fatal level.

Construction workers and particularly electricians do receive electric shocks, usually as a result of carelessness or unforeseen circumstances. As an electrician working on electrical equipment you must always make sure that the equipment is switched off or electrically isolated before commencing work. Every circuit must be provided with a means of isolation (IEE Regulation 132.15). When working on portable equipment or desk top units it is often simply a matter of unplugging the equipment from the adjacent supply. Larger pieces of equipment and electrical machines may require isolating at the local isolator switch before work commences. To deter anyone from re-connecting the supply while work is being carried out on equipment, a sign 'Danger – Electrician at Work' should be displayed on the isolator and the isolation 'secured' with a small padlock or the fuses removed so that no one can re-connect whilst work is being carried out on that piece of equipment. The Electricity at Work Regulations 1989 are very specific at Regulation 12(1) that we must ensure the disconnection and separation of electrical equipment from every source of supply and that this disconnection and separation is secure. Where a test instrument or voltage indicator is used to prove the supply dead, Regulation 4(3) of the Electricity at Work Regulations 1989 recommends that the following procedure is adopted.

Definition

Electrical isolation: We must ensure the disconnection and separation of electrical equipment from every source of supply and that this disconnection and separation is secure.

1. First connect the test device such as that shown in Fig. 8.3 to the supply which is to be isolated. The test device should indicate main's voltage.
2. Next, isolate the supply and observe that the test device now reads zero volts.
3. Then connect the same test device to a known live supply or proving unit such as that shown in Fig. 8.4 to 'prove' that the tester is still working correctly.
4. Finally secure the isolation and place warning signs; only then should work commence.

The test device being used by the electrician must incorporate safe test leads which comply with the Health and Safety Executive Guidance Note 38 on electrical test equipment. These leads should incorporate barriers to prevent the user touching live terminals when testing and incorporating a protective fuse and be well insulated and robust, such as those shown in Fig. 8.5.

Figure 8.3 Typical voltage indicator.

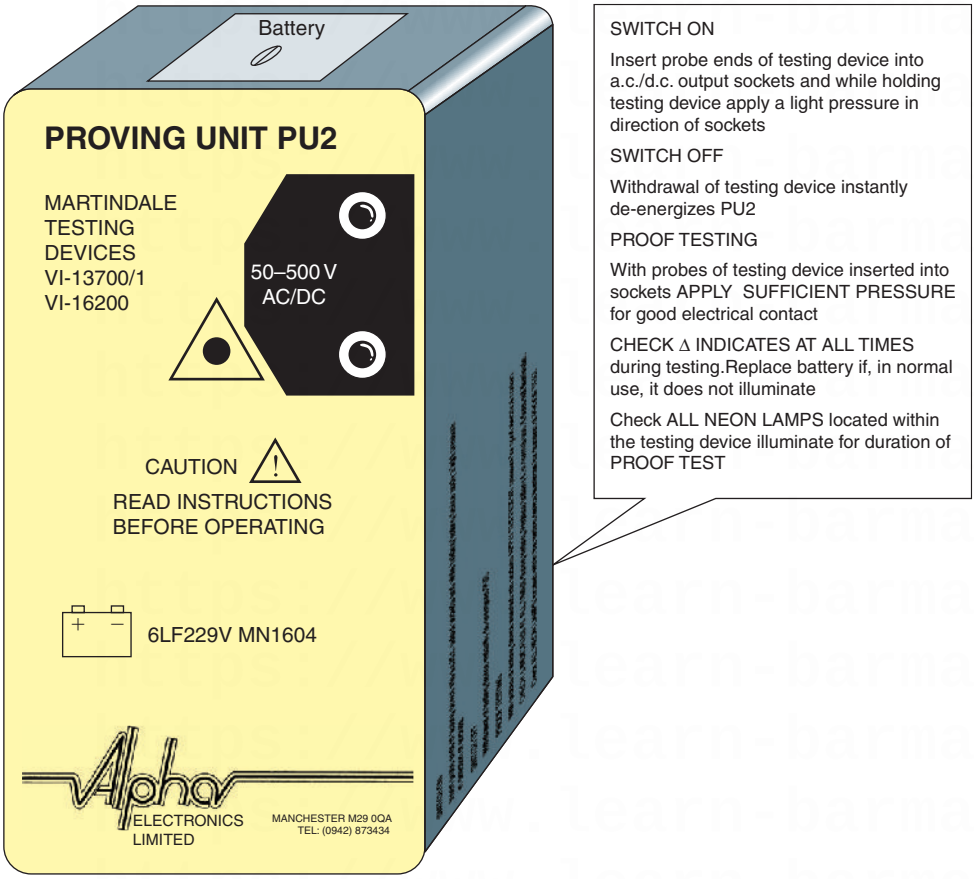

Figure 8.4 Voltage proving unit.

To isolate a piece of equipment or individual circuit successfully, competently, safely and in accordance with all the relevant regulations, we must follow a procedure such as that given by the flow diagram of Fig. 8.6. Start at the top and work down the flow diagram. When the heavy outlined amber boxes are reached,

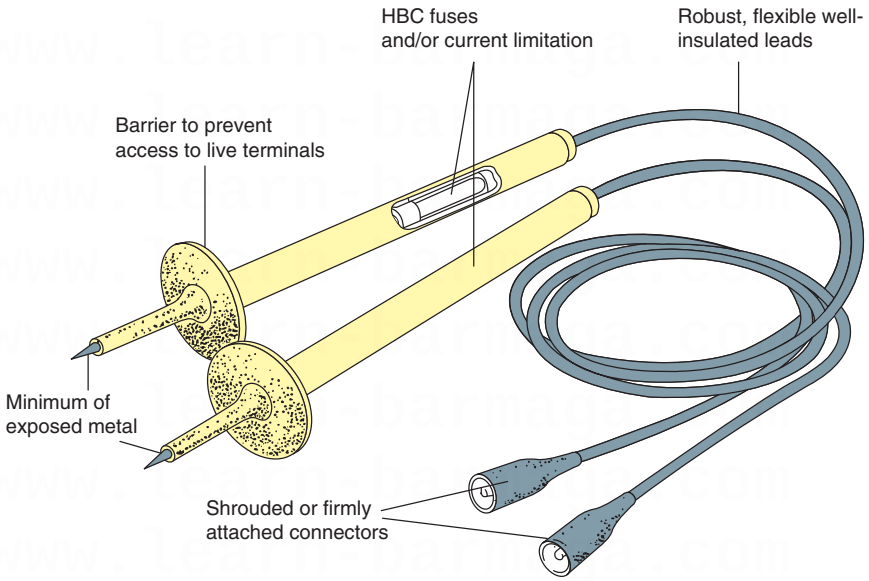

Figure 8.5 Recommended type of test probe and leads.

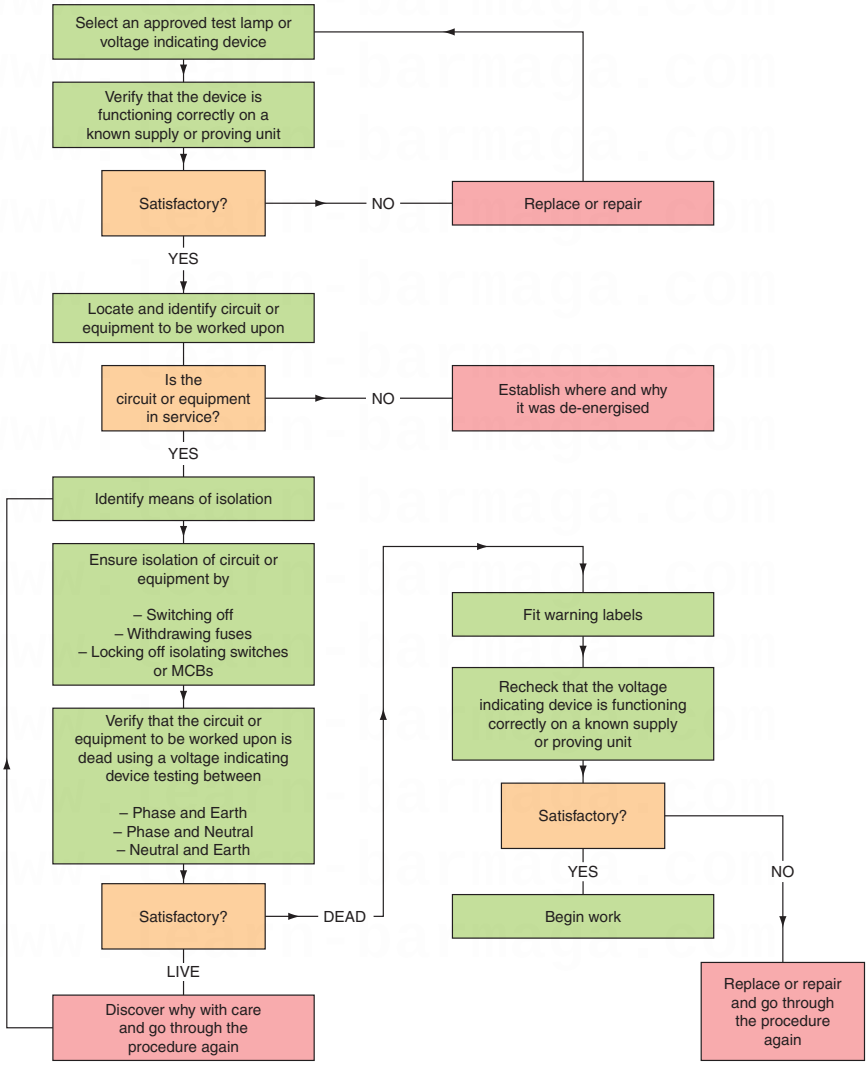

Figure 8.6 Flowchart for a secure isolation procedure.

pause and ask yourself whether everything is satisfactory up to this point. If the answer is 'yes', move on. If the answer is 'no', go back as indicated by the diagram.

Permit-to-work system

The **permit-to-work procedure** is a type of 'safe system to work' procedure used in specialized and potentially dangerous plant process situations. The procedure was developed for the chemical industry, but the principle is equally applicable to the management of complex risk in other industries or situations. For example:

- Working on part of an assembly line process where goods move through a complex, continuous process from one machine to another (e.g. the food industry).
- Repairs to railway tracks, tippers and conveyors.
- Working in confined spaces (e.g. vats and storage containers).
- Working on or near overhead crane tracks.
- Working underground or in deep trenches.
- Working on pipelines.
- Working near live equipment or unguarded machinery.
- Roof work.
- Working in hazardous atmospheres (e.g. the petroleum industry).
- Working near or with corrosive or toxic substances.

All the above situations are high-risk working situations that should be avoided unless you have received special training and will probably require the completion of a permit-to-work. Permits to work must adhere to the following eight principles:

1. Wherever possible the hazard should be eliminated so that the work can be done safely without a permit-to-work.
2. The Site Manager has overall responsibility for the permit-to-work even though he may delegate the responsibility for its issue.

Definition

The *permit-to-work procedure* is a type of 'safe system to work' procedure used in specialized and potentially dangerous plant process situations.

Faulty equipment: to repair or replace?

Having successfully diagnosed the cause of the fault we have to decide if we are to repair or replace the faulty component or piece of equipment.

In many cases the answer will be straightforward and obvious, but in some circumstances the solution will need to be discussed with the customer. Some of the issues which may be discussed are as follows:

- What is the cost of replacement? Will the replacement cost be prohibitive? Is it possible to replace only some of the components? Will the labour costs of the repair be more expensive than a replacement? Do you have the skills necessary to carry out the repair? Would the repaired piece of equipment be as reliable as a replacement?
- Is a suitable replacement available within an acceptable time? These days, manufacturers carry small stocks to keep costs down.
- Can the circuit or system be shut down to facilitate a repair or replacement?
- Can alternative or temporary supplies and services be provided while replacements or repairs are carried out?

Selecting test equipment

The HSE has published a guidance note (GS 38) which advise electricians and other electrically competent people on the selection of suitable test probes, voltage indicating devices and measuring instruments. This is because they consider suitably constructed test equipment to be as vital for personal safety as the training and practical skills of the electrician. In the past, unsatisfactory test probes and voltage indicators have frequently been the cause of accidents, and therefore all test probes must now incorporate the following features:

1. The probes must have finger barriers or be shaped so that the hand or fingers cannot make contact with the live conductors under test.
2. The probe tip must not protrude more than 2 mm, and preferably only 1 mm, be spring-loaded and screened.
3. The lead must be adequately insulated and coloured so that one lead is readily distinguished from the other.
4. The lead must be flexible and sufficiently robust.
5. The lead must be long enough to serve its purpose but not too long.
6. The lead must not have accessible exposed conductors even if it becomes detached from the probe or from the instrument.
7. Where the leads are to be used in conjunction with a voltage detector they must be protected by a fuse.

A suitable probe and lead is shown in Fig. 8.5.

GS 38 also tells us that where the test is being made simply to establish the presence or absence of a voltage, the preferred method is to use a proprietary test lamp or voltage indicator which is suitable for the working voltage, rather than a multimeter. Accident history has shown that incorrectly set multimeters or makeshift devices for voltage detection have frequently caused accidents. Figure 8.3 shows a suitable voltage indicator. Test lamps and voltage indicators are not fail-safe, and therefore GS 38 recommends that they should be regularly proved, preferably before and after use, as described previously in the flowchart for a safe isolation procedure.

The IEE Regulations (BS 7671) also specify the test voltage or current required to carry out particular tests satisfactorily. All testing must, therefore, be carried out using an 'approved' test instrument if the test results are to be valid. The test instrument must also carry a calibration certificate, otherwise the recorded results may be void. Calibration certificates usually last for a year. Test instruments must, therefore, be tested and recalibrated each year by an approved supplier. This will maintain the accuracy of the instrument to an acceptable level, usually within 2% of the true value.

Modern digital test instruments are reasonably robust, but to maintain them in good working order they must be treated with care. An approved test instrument costs as much as a good-quality camera; it should, therefore, receive the same care and consideration.

Continuity tester

To measure accurately the resistance of the conductors in an electrical installation, we must use an instrument which is capable of producing an open circuit voltage of between 4 and 24 V a.c. or d.c., and delivering a short-circuit current of not less than 200 mA (IEE Regulation 612.2.1). The functions of

continuity testing and insulation resistance testing are usually combined in one test instrument.

Insulation resistance tester

The test instrument must be capable of detecting insulation leakage between live conductors and between live conductors and earth. To do this and comply with IEE Regulation 612.3 the test instrument must be capable of producing a test voltage of 250, 500 or 1000 V and delivering an output current of not less than 1 mA at its normal voltage.

Earth fault loop impedance tester

The test instrument must be capable of delivering fault currents as high as 25A for up to 40 ms using the supply voltage. During the test, the instrument does an Ohm's law calculation and displays the test result as a resistance reading.

RCD tester

Where circuits are protected by an RCD we must carry out a test to ensure that the device will operate very quickly under fault conditions and within the time limits set by the IEE Regulations. The instrument must, therefore, simulate a fault and measure the time taken for the RCD to operate. The instrument is, therefore, calibrated to give a reading measured in milliseconds to an in-service accuracy of 10%.

If you purchase good-quality 'approved' test instruments and leads from specialist manufacturers they will meet all the regulations and standards and therefore give valid test results. However, to carry out all the tests required by the IEE Regulations will require a number of test instruments and this will represent a major capital investment in the region of £1000.

The specific tests required by the IEE Regulations: BS 7671 are described in detail in Chapter 7 of this book under the sub-heading 'Inspection and testing techniques'.

Electrical installation circuits usually carry in excess of 1A and often carry hundreds of amperes. Electronic circuits operate in the milliampere or even microampere range. The test instruments used on electronic circuits must have a *high impedance* so that they do not damage the circuit when connected to take readings. All instruments cause some disturbance when connected into a circuit because they consume some power in order to provide the torque required to move the pointer. In power applications these small disturbances seldom give rise to obvious errors, but in electronic circuits a small disturbance can completely invalidate any readings taken. We must, therefore, choose our electronic test equipment with great care as described in chapter 9 and Fig. 9.20.

So far in this chapter, I have been considering standard electrical installation circuits wired in conductors and cables using standard wiring systems. However, you may be asked to diagnose and repair a fault on a system that is unfamiliar to you or outside your experience and training. If this happens to you, I would suggest that you immediately tell the person ordering the work or your supervisor that it is beyond your knowledge and experience. I have said earlier that fault diagnosis can only be carried out successfully by someone with a broad range of experience and a thorough knowledge of the installation or equipment that is malfunctioning. The person ordering the work will not think you a fool for saying straightaway that the work is outside your experience. It is better to be respected for your honesty than to attempt something that is beyond you at the present time and which could create bigger problems and waste valuable repair time.

Let us now consider some situations where special precautions or additional skills and knowledge may need to be applied.

Special situations or locations

All electrical installations and installed equipment must be safe to use and free from the dangers of electric shock, but some installations or locations require special consideration because of the inherent dangers of the installed conditions. The danger may arise because of the corrosive or explosive nature of the atmosphere, because the installation must be used in damp or low-temperature conditions or because there is a need to provide additional mechanical protection for the electrical system. Part 7 of the IEE Regulations deals with these special installations or locations. In this section we will consider some of the installations which require special consideration.

Optical fibre cables

The introduction of fibre-optic cable systems and digital transmissions will undoubtedly affect future cabling arrangements and the work of the electrician. Networks based on the digital technology currently being used so successfully by the telecommunications industry are very likely to become the long-term standard for computer systems. Fibre-optic systems dramatically reduce the number of cables required for control and communications systems, and this will in turn reduce the physical room required for these systems. Fibre-optic cables are also immune to electrical noise when run parallel to mains cables and, therefore, the present rules of segregation and screening may change in the future. There is no spark risk if the cable is accidentally cut and, therefore, such circuits are intrinsically safe.

Optical fibre cables are communication cables made from optical-quality plastic, the same material from which spectacle lenses are manufactured. The energy is transferred down the cable as digital pulses of laser light as against current flowing down a copper conductor in electrical installation terms. The light pulses stay within the fibre-optic cable because of a scientific principle known as 'total internal refraction' which means that the laser light bounces down the cable and when it strikes the outer wall it is always deflected inwards and, therefore, does not escape out of the cable, as shown in Fig. 8.7.

The cables are very small because the optical quality of the conductor is very high and signals can be transmitted over great distances. They are cheap to produce and lightweight because these new cables are made from high-quality plastic and not high-quality copper. Single-sheathed cables are often called 'simplex' cables and twin-sheathed cables 'duplex', that is, two simplex cables together in one sheath. Multicore cables are available containing up to 24 single fibres.

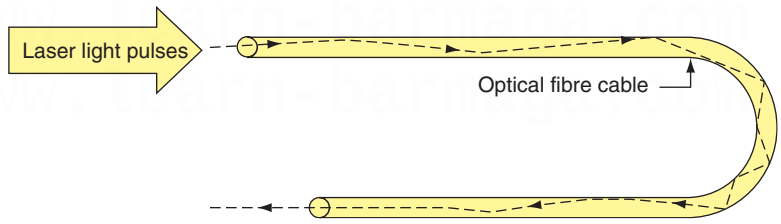

Figure 8.7 Digital pulses of laser light down an optical fibre cable.

Fibre-optic cables look like steel wire armour (SWA) cables (but of course are lighter) and should be installed in the same way and given the same level of protection as SWA cables. Avoid tight-radius bends if possible and kinks at all costs. Cables are terminated in special joint boxes which ensure cable ends are cleanly cut and butted together to ensure the continuity of the light pulses. Fibre-optic cables are Band I circuits when used for data transmission and must therefore be segregated from other mains cables to satisfy the IEE Regulations.

The testing of fibre-optic cables requires that special instruments be used to measure the light attenuation (i.e. light loss) down the cable. Finally, when working with fibre-optic cables, electricians should avoid direct eye contact with the low-energy laser light transmitted down the conductors.

Antistatic precautions

Static electricity is a voltage charge which builds up to many thousands of volts between two surfaces when they rub together. A dangerous situation occurs when the static charge has built up to a potential capable of striking an arc through the airgap separating the two surfaces.

Definition

Static electricity is a voltage charge which builds up to many thousands of volts between two surfaces when they rub together.

Static charges build up in a thunderstorm. A lightning strike is the discharge of the thunder cloud, which might have built up to a voltage of 100 MV, to the general mass of earth which is at 0 V. Lightning discharge currents are of the order of 20 kA, hence the need for lightning conductors on vulnerable buildings in order to discharge the energy safely.

Static charge builds up between any two insulating surfaces or between an insulating surface and a conducting surface, but it is not apparent between two conducting surfaces.

Definition

Static charge builds up between any two insulating surfaces or between an insulating surface and a conducting surface, but it is not apparent between two conducting surfaces.

A motor car moving through the air builds up a static charge which sometimes gives the occupants a minor shock as they step out and touch the door handle.

Static electricity also builds up in modern offices and similar carpeted areas. The combination of synthetic carpets, man-made footwear materials and dry air conditioned buildings contribute to the creation of static electrical charges building up on people moving about these buildings. Individuals only become aware of the charge if they touch earthed metalwork, such as a stair banister rail, before the static electricity has been dissipated. The effect is a sensation of momentary shock.

The precautions against this problem include using floor coverings that have been 'treated' to increase their conductivity or that contain a proportion of natural fibres that have the same effect. The wearing of leather-soled footwear also reduces the likelihood of a static charge persisting, as does increasing the humidity of the air in the building.

A nylon overall and nylon bed sheets build up static charge which is the cause of the 'crackle' when you shake them. Many flammable liquids have the same properties as insulators, and therefore liquids, gases, powders and paints moving through pipes build up a static charge.

Petrol pumps, operating theatre oxygen masks and car spray booths are particularly at risk because a spark in these situations may ignite the flammable liquid, powder or gas.

So how do we protect ourselves against the risks associated with static electrical charges? I said earlier that a build-up of static charge is not apparent between two conducting surfaces, and this gives a clue to the solution. Bonding surfaces

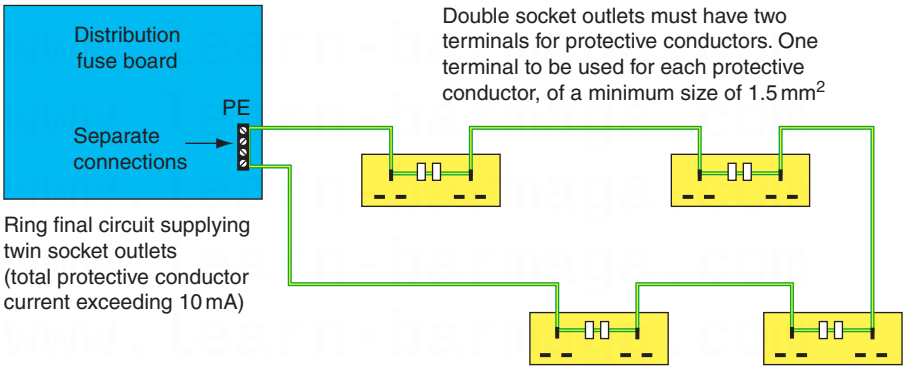

Figure 8.8 Recommended method of connecting IT equipment to socket outlets.

together with protective equipotential bonding conductors prevents a build-up of static electricity between the surfaces. If we use large-diameter pipes, we reduce the flow rates of liquids and powders and, therefore, we reduce the build-up of static charge. Hospitals use cotton sheets and uniforms, and use protective equipotential bonding extensively in operating theatres. Rubber, which contains a proportion of graphite, is used to manufacture antistatic trolley wheels and surgeons' boots. Rubber constructed in this manner enables any build-up of static charge to 'leak' away. Increasing humidity also reduces static charge because the water droplets carry away the static charge, thus removing the hazard.

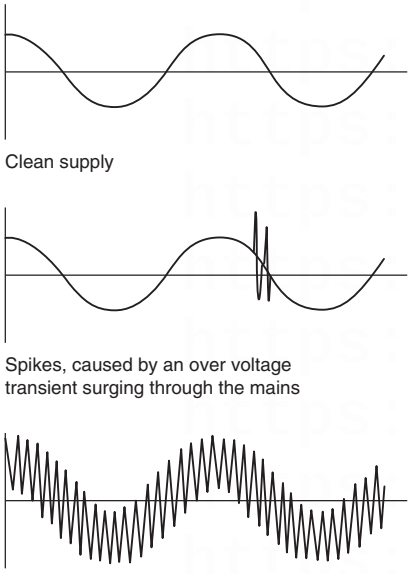

Figure 8.9 Distortions in the a.c. mains supply.

Avoiding shutdown of IT equipment

Every modern office now contains computers, and many systems are linked together or networked. Most computer systems are sensitive to variations or distortions in the mains supply and many computers incorporate filters which produce high-protective conductor currents of around 2 or 3 mA. This is clearly not a fault current, but is typical of the current which flows in the circuit protective conductor of IT equipment under normal operating conditions. IEE Regulations 543.7.1 and 4 deal with the earthing requirements for the installation of equipment having high-protective conductor currents. IEE Guidance Note 7 recommends that IT equipment should be connected to double sockets as shown in Fig. 8.8.

Clean supplies

Supplies to computer circuits must be 'clean' and 'secure'. Mainframe computers and computer networks are sensitive to mains distortion or interference, which is referred to as 'noise'. Noise is mostly caused by switching an inductive circuit which causes a transient spike, or by brush gear making contact with the commutator segments of an electric motor. These distortions in the mains supply can cause computers to 'crash' or provoke errors and are shown in Fig. 8.9.

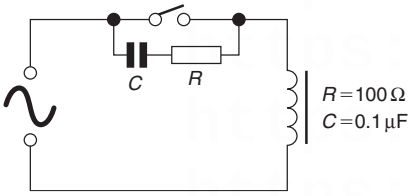

Figure 8.10 A simple noise suppressor.

To avoid this, a 'clean' supply is required for the computer network. This can be provided by taking the ring or radial circuits for the computer supplies from a point as close as possible to the intake position of the electrical supply to the building. A clean earth can also be taken from this point, which is usually one core of the cable and not the armour of an SWA cable, and distributed around the final wiring circuit. Alternatively, the computer supply can be cleaned by means of a filter such as that shown in Fig. 8.10.

Secure supplies

The mains electrical supply in the United Kingdom is extremely reliable and secure. However, the loss of supply to a mainframe computer or computer network for even a second can cause the system to 'crash', and hours, or even days, of work can be lost.

One solution to this problem is to protect 'precious' software systems with an uninterruptible power supply (UPS). A **UPS** is essentially a battery supply electronically modified to provide a clean and secure a.c. supply. The UPS is plugged into the mains supply and the computer systems are plugged into the UPS.

A UPS to protect a small network of, say, six PCs is physically about the size of one PC hard drive and is usually placed under or at the side of an operator's desk.

It is best to dedicate a ring or radial circuit to the UPS and either to connect the computer equipment permanently or to use non-standard outlets to discourage the unauthorized use and overloading of these special supplies by, for example, kettles.

Finally, remember that most premises these days contain some computer equipment and systems. Electricians intending to isolate supplies for testing or modification should *first check and then check again* before they finally isolate the supply in order to avoid loss or damage to computer systems.

Definition

A UPS is essentially a battery supply electronically modified to provide a clean and secure a.c. supply.

Damage to electronic devices by 'overvoltage'

The use of electronic circuits in all types of electrical equipment has increased considerably over recent years. Electronic circuits and components can now be found in leisure goods, domestic appliances, motor starting and control circuits, discharge lighting, emergency lighting, alarm circuits and special-effects lighting systems. All electronic circuits are low-voltage circuits carrying very small currents.

Electrical installation circuits usually carry in excess of 1A and often carry hundreds of amperes. Electronic circuits operate in the milliampere or even microampere range. The test instruments used on electronic circuits must have a *high impedance* so that they do not damage the circuit when connected to take readings.

The use of an insulation resistance test as described by the IEE Regulations (described in Chapter 7 of this book), must be avoided with any electronic equipment. The working voltage of this instrument can cause total devastation to modern electronic equipment. When carrying out an insulation resistance test as part of the prescribed series of tests for an electrical installation, all electronic equipment must first be disconnected or damage will result.

Any resistance measurements made on electronic circuits must be achieved with a battery-operated ohmmeter, with a high impedance to avoid damaging the electronic components.

Risks associated with high frequency or large capacitive circuits

Induction heating processes use high-frequency power to provide very focused heating in industrial processes.

Definition

Induction heating processes use high-frequency power to provide very focused heating in industrial processes.

The induction heater consists of a coil of large cross-section. The work-piece or object to be heated is usually made of ferrous metal and is placed inside the coil. When the supply is switched on, eddy currents are induced into the work-piece and it heats up very quickly so that little heat is lost to conduction and convection.

The frequency and size of the current in the coil determines where the heat is concentrated in the work-piece:

- the higher the current, the greater is the surface penetration;
- the longer the current is applied, the deeper the penetration;
- the higher the frequency, the less is the depth of heat penetration.

For shallow penetration, high frequency, high current, short time application is typically used for tool tempering. Other applications are brazing and soldering industrial and domestic gas boiler parts.

When these machines are not working they look very harmless but when they are working they operate very quietly and there is no indication of the intense heat that they are capable of producing. Domestic and commercial microwave ovens operate at high frequency. The combination of risks of high frequency and intense heating means that before any maintenance, repair work or testing is carried out, the machine must first be securely isolated and no one should work on these machines unless they have received additional training to enable them to do so safely.

Industrial wiring systems are very inductive because they contain many inductive machines and circuits, such as electric motors, transformers, welding plants and discharge lighting. The inductive nature of the industrial load causes the current to lag behind the voltage and creates a bad power factor. Power factor is the percentage of current in an alternating current circuit that can be used as energy for the intended purpose. A power factor of say 0.7 indicates that 70% of the current supplied is usefully employed by the industrial equipment.

An inductive circuit, such as that produced by an electric motor, induces an electromagnetic force which opposes the applied voltage and causes the current waveform to lag the voltage waveform. Magnetic energy is stored up in the load during one half cycle and returned to the circuit in the next half cycle. If a capacitive circuit is employed, the current leads the voltage since the capacitor stores energy as the current rises and discharges it as the current falls. So here we have the idea of a solution to the problem of a bad power factor created by inductive industrial loads. Power factor and power factor improvement is discussed below.

Definition

The *power factor* of the consumer is governed entirely by the electrical plant and equipment that is installed and operated within the consumer's buildings.

The **power factor** at which consumers take their electricity from the local electricity supply authority is outside the control of the supply authority. The power factor of the consumer is governed entirely by the electrical plant and equipment that is installed and operated within the consumer's buildings. Domestic consumers do not have a bad power factor because they use very little inductive equipment. Most of the domestic load is neutral and at unity power factor.

Electricity supply authorities discourage the use of equipment and installations with a low power factor because they absorb part of the capacity of the generating plant and the distribution network to no useful effect. They, therefore, penalize industrial consumers with a bad power factor through a maximum demand tariff, metered at the consumer's intake position. If the power factor falls below a datum level of between 0.85 and 0.9 then extra charges are incurred. In this way industrial consumers are encouraged to improve their power factor.

Power factor improvement of most industrial loads is achieved by connecting capacitors to either:

- individual items of equipment or,
- banks of capacitors may be connected to the main busbars of the installation at the intake position.

The method used will depend upon the utilization of the installed equipment by the industrial or commercial consumer. If the load is constant then banks of capacitors at the mains intake position would be indicated. If the load is variable then power factor correction equipment could be installed adjacent to the machine or piece of equipment concerned.

Power factor correction by capacitors is the most popular method because of the following:

- They require no maintenance.
- Capacitors are flexible and additional units may be installed as an installation or system is extended.
- Capacitors may be installed adjacent to individual pieces of equipment or at the mains intake position. Equipment may be placed on the floor or fixed high up and out of the way.

Capacitors store charge and must be disconnected before the installation or equipment is tested in accordance with Section 6 of the IEE Regulations BS 7671.

Small power factor correction capacitors, as used in discharge lighting, often incorporate a high-value resistor connected across the mains terminals. This discharges the capacitor safely when not in use. Banks of larger capacity capacitors may require discharging to make them safe when not in use. To discharge a capacitor safely and responsibly it must be discharged slowly over a period in excess of five 'time-constants' through a suitable discharge resistor. Capacitors and time-constants are discussed later in this book in Chapter 9 under the sub-heading 'Electrostatics'.

Definition

Power factor improvement of most industrial loads is achieved by connecting capacitors to either:

- individual items of equipment or,
- banks of capacitors.

Presence of storage batteries

Since an emergency occurring in a building may cause the mains supply to fail, the **emergency lighting** should be supplied from a source which is independent from the main supply. A battery's ability to provide its output instantly makes it a very satisfactory source of standby power. In most commercial, industrial and public service buildings housing essential services, the alternative power supply would be from batteries, but generators may also be used. Generators can have a large capacity and duration, but a major disadvantage is the delay of time while the generator runs up to speed and takes over the load. In some premises a delay of more than 5 seconds is considered unacceptable, and in these cases a battery supply is required to supply the load until the generator can take over.

The emergency lighting supply must have an adequate capacity and rating for the specified duration of time (IEE Regulation 313.2). BS 5266 and BS EN 1838 states that after a battery is discharged by being called into operation for its specified duration of time, it should be capable of once again operating for the specified duration of time following a recharge period of not longer than 24 hours. The duration of time for which the emergency lighting should operate will be specified by a statutory authority but is normally 1–3 hours. The British Standard states that escape lighting should operate for a minimum of 1 hour.

Definition

Since an emergency occurring in a building may cause the mains supply to fail, the *emergency lighting* should be supplied from a source which is independent from the main supply.

Standby lighting operation time will depend upon financial considerations and the importance of continuing the process or activity within the premises after the mains supply has failed.

The contractor installing the emergency lighting should provide a test facility which is simple to operate and secure against unauthorized interference. The emergency lighting installation must be segregated completely from any other wiring, so that a fault on the main electrical installation cannot damage the emergency lighting installation (IEE Regulation 528.1).

The batteries used for the emergency supply should be suitable for this purpose. Motor vehicle batteries are not suitable for emergency lighting applications, except in the starter system of motor-driven generators. The fuel supply to a motor-driven generator should be checked. The battery room of a central battery system must be well ventilated and, in the case of a motor-driven generator, adequately heated to ensure rapid starting in cold weather.

The British Standard recommends that the full load should be carried by the emergency supply for at least 1 hour in every 6 months. After testing, the emergency system must be carefully restored to its normal operative state. A record should be kept of each item of equipment and the date of each test by a qualified or responsible person. It may be necessary to produce the record as evidence of satisfactory compliance with statutory legislation to a duly authorized person.

Self-contained units are suitable for small installations of up to about 12 units. The batteries contained within these units should be replaced about every 5 years, or as recommended by the manufacturer.

Definition

Storage batteries are secondary cells. A secondary cell has the advantage of being rechargeable. If the cell is connected to a suitable electrical supply, electrical energy is stored on the plates of the cell as chemical energy. When the cell is connected to a load, the chemical energy is converted to electrical energy.

Storage batteries are secondary cells. A secondary cell has the advantage of being rechargeable. If the cell is connected to a suitable electrical supply, electrical energy is stored on the plates of the cell as chemical energy. When the cell is connected to a load, the chemical energy is converted to electrical energy.

A lead-acid cell is a secondary cell. Each cell delivers about 2 V, and when six cells are connected in series a 12 V battery is formed.

A lead-acid battery is constructed of lead plates which are deeply ribbed to give maximum surface area for a given weight of plate. The plates are assembled in groups, with insulating separators between them. The separators are made of a porous insulating material, such as wood or ebonite, and the whole assembly is immersed in a dilute sulphuric acid solution in a plastic container.

The capacity of a cell to store charge is a measure of the total quantity of electricity which it can cause to be displaced around a circuit after being fully charged. It is stated in ampere-hours, abbreviation Ah, and calculated at the 10-hour rate which is the steady load current which would completely discharge the battery in 10 hours. Therefore, a 50 Ah battery will provide a steady current of 5A for 10 hours.

Maintenance of lead-acid batteries

- The plates of the battery must always be covered by dilute sulphuric acid. If the level falls, it must be topped up with distilled water.
- Battery connections must always be tight and should be covered with a thin coat of petroleum jelly.
- The specific gravity or relative density of the battery gives the best indication of its state of charge. A discharged cell will have a specific gravity of 1.150, which will rise to 1.280 when fully charged. The specific gravity of a cell can be tested with a hydrometer.

- To maintain a battery in good condition it should be regularly trickle-charged. A rapid charge or discharge encourages the plates to buckle, and may cause permanent damage. Most batteries used for standby supplies today are equipped with constant voltage chargers. The principle of these is that after the battery has been discharged by it being called into operation, the terminal voltage will be depressed and this enables a relatively large current (1–5A) to flow from the charger to recharge the battery. As the battery becomes more fully charged its voltage will rise until it reaches the constant voltage level where the current output from the charger will drop until it is just sufficient to balance the battery's internal losses. The main advantage of this system is that the battery controls the amount of charge it receives and is therefore automatically maintained in a fully charged condition without human intervention and without the use of any elaborate control circuitry.
- The room used to charge the emergency supply storage batteries must be well ventilated because the charged cell gives off hydrogen and oxygen, which are explosive in the correct proportions.

Working alone

Some working situations are so potentially hazardous that not only must PPE be worn but you must also never work alone and safe working procedures must be in place before your work begins to reduce the risk.

It is unsafe to work in isolation in the following situations:

- when working above ground,
- when working below ground,
- when working in confined spaces,
- when working close to unguarded machinery,
- when a fire risk exists,
- when working close to toxic or corrosive substances.

Working above ground

The new Work at Height Regulations 2005 tells us that a person is at height if that person could be injured by falling from it. The Regulations require that:

- We should avoid working at height if at all possible.
- No work should be done at height which can be done on the ground. For example, equipment can be assembled on the ground then taken up to height, perhaps for fixing.
- Ensure the work at height is properly planned.
- Take account of any risk assessments carried out under Regulation 3 of the Management of Health and Safety at Work Regulations.

Working below ground

Working below ground might be working in a cellar or an unventilated basement with only one entrance/exit. There is a risk that this entrance/exit might become blocked by materials, fumes or fire. When working in trenches there is always the risk of the sides collapsing if they are not adequately supported by temporary steel sheets. There is also the risk of falling objects so always:

- wear a hard hat,
- never go into an unsupported excavation,

- erect barriers around the excavation,
- provide good ladder access,
- ensure the work is properly planned,
- take account of the risk assessment before starting work.

Working in confined spaces

When working in confined spaces there is always the risk that you may become trapped or overcome by a lack of oxygen or by gas, fumes, heat or an accumulation of dust. Examples of confined spaces are:

- storage tanks and silos on farms,
- enclosed sewer and pumping stations,
- furnaces,
- ductwork.

In my experience, electricians spend a lot of time on their knees in confined spaces because many electrical cable systems run out of sight away from the public areas of a building.

The Confined Spaces Regulations 1997 require that:

- A risk assessment is carried out before work commences.
- If there is a serious risk of injury in entering the confined space then the work should be done on the outside of the vessel.
- Follow a safe working procedure such as a 'permit-to-work procedure' which is discussed later in this chapter, and put adequate emergency arrangements in place before work commences.

Working near unguarded machinery

There is an obvious risk in working close to unguarded machinery and indeed, most machinery will be guarded but in some production processes and with overhead travelling cranes, this is not always possible. To reduce the risks associated with these hazards:

- have the machinery stopped during your work activity if possible,
- put temporary barriers in place,
- make sure that the machine operator knows that you are working on the equipment,
- identify the location of emergency stop buttons,
- take account of the risk assessment before work commences.

A risk of fire

When working in locations containing stored flammable materials such as petrol, paraffin, diesel or bottled gas, there is always the risk of fire. To minimize the risk:

- take account of the risk assessment before work commences,
- keep the area well ventilated,
- locate the fire extinguishers,
- secure your exit from the area,
- locate the nearest fire alarm point,
- follow a safe working procedure and put adequate emergency arrangements in place before work commences.

Safety first

Working alone

- Never work alone in:
  - confined spaces
  - storage tanks
  - enclosed ductwork.

Hazardous area installations

The British Standards concerned with hazardous areas were first published in the 1920s and were concerned with the connection of electrical apparatus in the mining industry. Since those early days many national and international standards, as well as codes of practice, have been published to inform the manufacture, installation and maintenance of electrical equipment in all hazardous areas.

The relevant British Standards for Electrical Apparatus for Potentially Explosive Atmospheres are BS 5345, BS EN 60079 and BS EN 50014: 1998.

They define a **hazardous area** as 'any place in which an explosive atmosphere may occur in such quantity as to require special precautions to protect the safety of workers'. Clearly these regulations affect the petroleum industry, but they also apply to petrol filling stations.

Most flammable liquids only form an explosive mixture between certain concentration limits. Above and below this level of concentration the mix will not explode. The lowest temperature at which sufficient vapour is given off from a flammable substance to form an explosive gas–air mixture is called the **flashpoint**. A liquid which is safe at normal temperatures will require special consideration if heated to flashpoint. An area in which an explosive gas–air mixture is present is called a **hazardous area**, as defined by the British Standards, and any electrical apparatus or equipment within a hazardous area must be classified as flameproof.

Flameproof electrical equipment is constructed so that it can withstand an internal explosion of the gas for which it is certified, and prevent any spark or flame resulting from that explosion leaking out and igniting the surrounding atmosphere. This is achieved by manufacturing flameproof equipment to a robust standard of construction. All access and connection points have wide machined flanges which damp the flame in its passage across the flange. Flanged surfaces are firmly bolted together with many recessed bolts, as shown in Fig. 8.11. Wiring systems within a hazardous area must be to flameproof fittings using an appropriate method, such as:

- PVC cables encased in solid drawn heavy-gauge screwed steel conduit terminated at approved enclosures having wide flanges and bolted covers.

Definition

They define a *hazardous area* as 'any place in which an explosive atmosphere may occur in such quantity as to require special precautions to protect the safety of workers'.

Definitions

The lowest temperature at which sufficient vapour is given off from a flammable substance to form an explosive gas–air mixture is called the *flashpoint*.

An area in which an explosive gas–air mixture is present is called a *hazardous area*, as defined by the British Standards, and any electrical apparatus or equipment within a hazardous area must be classified as flameproof.

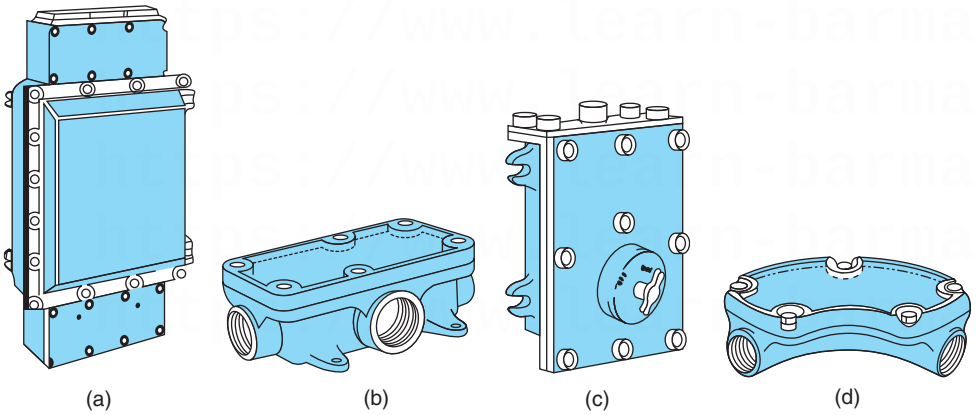

Figure 8.11 Flameproof fittings: (a) flameproof distribution board; (b) flameproof rectangular junction box; (c) double-pole switch; (d) flameproof inspection bend.

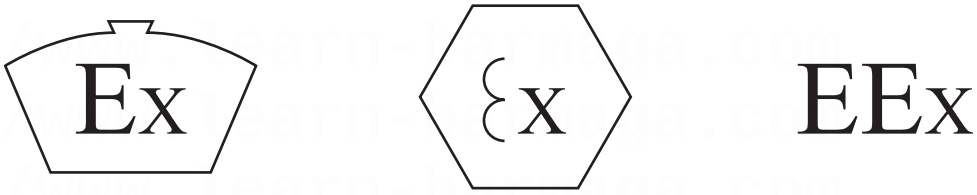

Figure 8.12 Flameproof equipment markings.

- Mineral insulated cables terminated into accessories with approved flameproof glands. These have a longer gland thread than normal MICC glands of the type shown in Fig. 5.23 in Chapter 5 of this book. Where the cable is laid underground, it must be protected by a PVC sheath and laid at a depth of not less than 500 mm.
- PVC armoured cables terminated into accessories with approved flameproof glands or any other wiring system which is approved by the British Standard. All certified flameproof enclosures will be marked Ex, indicating that they are suitable for potentially explosive situations, or EEx, where equipment is certified to the harmonized European Standard. All the equipment used in a flameproof installation must carry the appropriate markings, as shown in Fig. 8.12, if the integrity of the wiring system is to be maintained.

Flammable and explosive installations are to be found in the petroleum and chemical industries, which are classified as group II industries. Mining is classified as group I and receives special consideration from the Mining Regulations because of the extreme hazards of working underground. Petrol filling pumps must be wired and controlled by flameproof equipment to meet the requirements of the Petroleum Regulation Act 1928 and 1936 and any local licensing laws concerning the keeping and dispensing of petroleum spirit.

Hazardous area classification

The British Standard divides the risk associated with inflammable gases and vapours into three classes or zones.

- Zone 0 is the most hazardous, and is defined as a zone or area in which an explosive gas–air mixture is *continuously present* or present for long periods. ('Long periods' is usually taken to mean that the gas–air mixture will be present for longer than 1000 h per year.)
- Zone 1 is an area in which an explosive gas–air mixture is *likely to occur* in normal operation. (This is usually taken to mean that the gas–air mixture will be present for up to 1000 h per year.)
- Zone 2 is an area in which an explosive gas–air mixture is *not likely* to occur in normal operation and if it does occur it will exist for a very short time. (This is usually taken to mean that the gas–air mixture will be present for less than 10 h per year.)

If an area is not classified as zone 0, 1 or 2, then it is deemed to be non-hazardous, so that normal industrial electrical equipment may be used.

The electrical equipment used in zone 2 will contain a minimum amount of protection. For example, normal sockets and switches cannot be installed in a zone 2 area, but oil-filled radiators may be installed if they are directly connected and controlled from outside the area. Electrical equipment in this area should be marked Ex'o' for oil-immersed or Ex'p' for powder-filled.

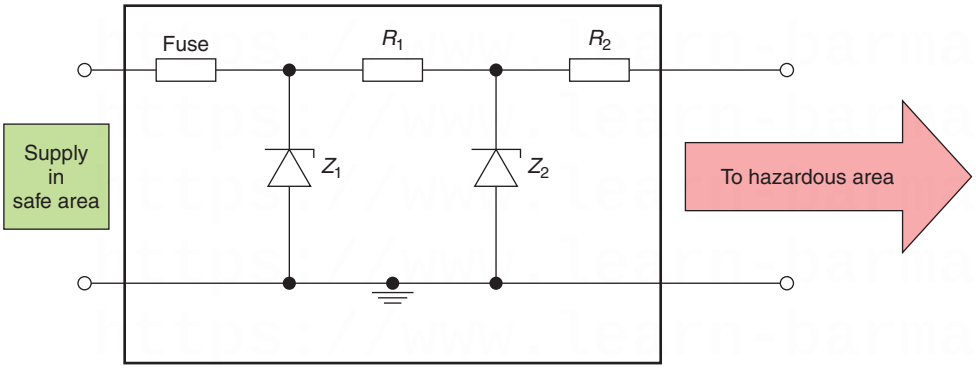

Figure 8.13 Zener safety barrier.

In zone 1 all electrical equipment must be flameproof, as shown in Fig. 8.11, and marked Ex'd' to indicate a flameproof enclosure.

Ordinary electrical equipment cannot be installed in zone 0, even when it is flameproof protected. However, many chemical and oil-processing plants are entirely dependent upon instrumentation and data transmission for their safe operation. Therefore, very low-power instrumentation and data-transmission circuits can be used in special circumstances, but the equipment must be *intrinsically safe*, and used in conjunction with a 'safety barrier' installed outside the hazardous area. Intrinsically safe equipment must be marked Ex'ia' or Ex's', specially certified for use in zone 0.

Intrinsic safety

By definition, an **intrinsically safe circuit** is one in which no spark or thermal effect is capable of causing ignition of a given explosive atmosphere. The intrinsic safety of the equipment in a hazardous area is assured by incorporating a Zener diode safety barrier into the control circuit such as that shown in Fig. 8.13. In normal operation, the voltage across a Zener diode is too low for it to conduct, but if a fault occurs, the voltage across Z_1 and Z_2 will rise, switching them on and blowing the protective fuse. Z_2 is included in the circuit as a 'back-up' in case the first Zener diode fails.

An intrinsically safe system, suitable for use in zone 0, is one in which *all* the equipment, apparatus and interconnecting wires and circuits are intrinsically safe.

Definition

An *intrinsically safe circuit* is one in which no spark or thermal effect is capable of causing ignition of a given explosive atmosphere.

Index of Protection (IP) BS EN 60529

IEE Regulation 612.4.5 tells us that where barriers and enclosures have been installed to prevent direct contact with live parts, they must afford a degree of protection not less than IP2X and IP4X, but what does this mean?

The Index of Protection is a code which gives us a means of specifying the suitability of equipment for the environmental conditions in which it will be used. The tests to be carried out for the various degrees of protection are given in the British and European Standard BS EN 60529.

The code is written as IP (Index of Protection) followed by two numbers XX. The first number gives the degree of protection against the penetration of solid objects into the enclosure. The second number gives the degree of protection against water penetration. For example, a piece of equipment classified as IP45

will have barriers installed which prevent a 1 mm diameter rigid steel bar from making contact with live parts and be protected against the ingress of water from jets of water applied from any direction. Where a degree of protection is not specified, the number is replaced by an 'X' which simply means that the degree of protection is not specified although some protection may be afforded. The 'X' is used instead of '0' since '0' would indicate that no protection was given. The index of protection codes is shown in Fig. 8.14.

First number (DEGREE OF PROTECTION AGAINST SOLID OBJECT PENETRATION)		**Second number** (DEGREE OF PROTECTION AGAINST WATER PENETRATION)	
0	Non-protected.	0	Non-protected.
1	Protected against a solid object greater than 50 mm, such as a hand.	1	Protected against water dripping vertically, such as condensation.
2	Protected against a solid object greater than 12 mm, such as a finger.	2	Protected against dripping water when tilted up to 15°.
3	Protected against a solid object greater than 2.5 mm, such as a tool or wire.	3	Protected against water spraying at an angle of up to 60°.
4	Protected against a solid object greater than 1.0 mm, such as thin wire or strips.	4	Protected against water splashing from any direction.
5	Dust protected. Prevents ingress of dust sufficient to cause harm.	5	Protected against jets of water from any direction.
6	Dust tight. No dust ingress.	6	Protected against heavy seas or powerful jets of water. Prevents ingress sufficient to cause harm.
		7	Protected against harmful ingress of water when immersed to a depth of between 150 mm and 1 m.
		8	Protected against submersion. Suitable for continuous immersion in water.

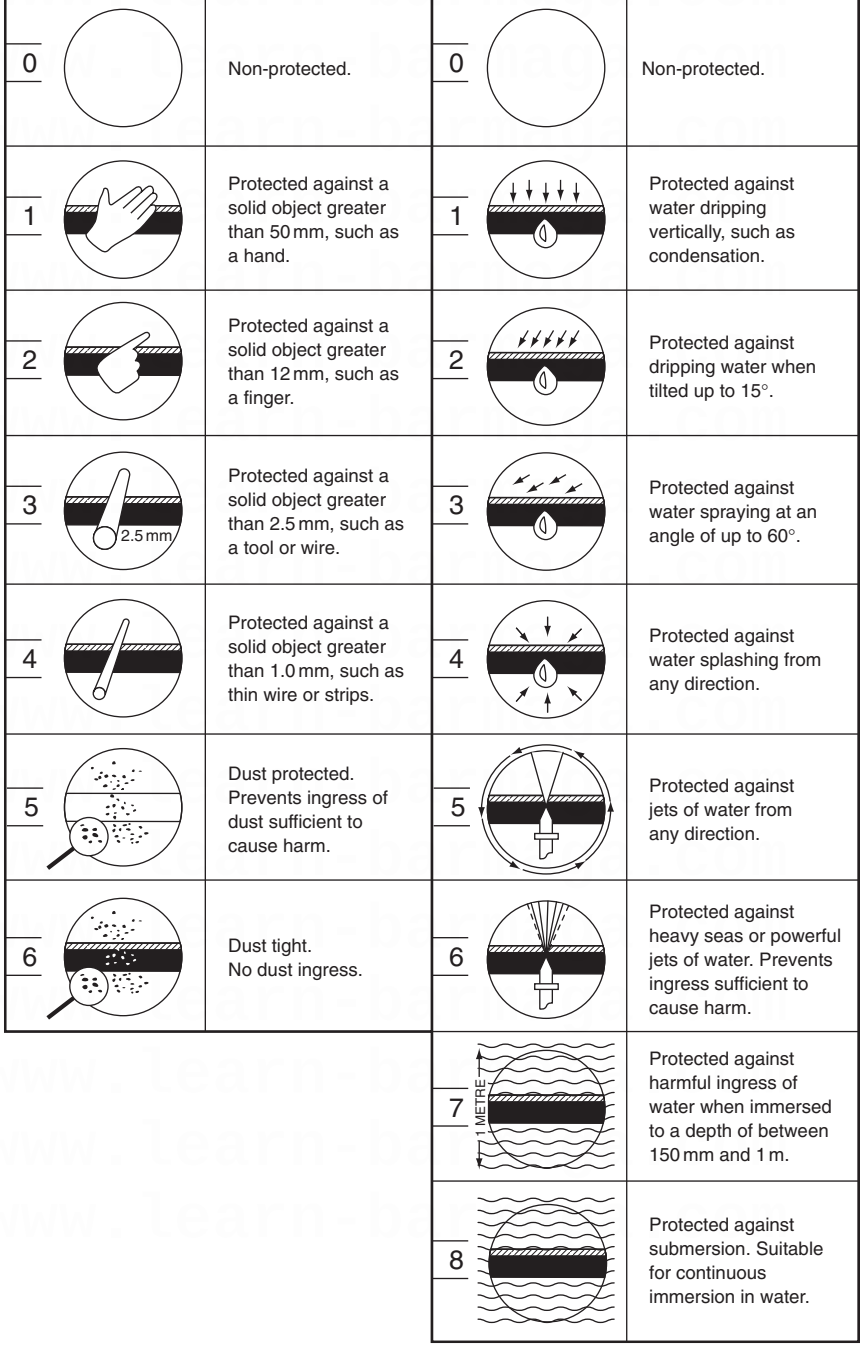

Figure 8.14 Index of protection codes.

Temporary construction site installations

Temporary electrical supplies provided on construction sites can save many man hours of labour by providing the energy required for fixed and portable tools and lighting which speeds up the completion of a project. However, construction sites are dangerous places and the temporary electrical supply which is installed to assist the construction process must comply with all of the relevant wiring regulations for permanent installations (IEE Regulation 110.1). All equipment must be of a robust construction in order to fulfil the on-site electrical requirements while being exposed to rough handling, vehicular nudging, the wind, rain and sun. All equipment socket outlets, plugs and couplers must be of the industrial type to BS EN 60439 and BS EN 60309 and specified by IEE Regulation 704.511.1 as shown in Fig. 8.15.

Where an electrician is not permanently on site, MCBs are preferred so that overcurrent protection devices can be safely reset by an unskilled person. The British Standards Code of Practice 1017, *The Distribution of Electricity on Construction and Building Sites*, advises that protection against earth faults may be obtained by first providing a low impedance path, so that overcurrent devices can operate quickly as described in Chapter 4, and secondly by fitting an RCD in addition to the overcurrent protection device (IEE Regulation 704.410.3.10). The 17th edition of the IEE Regulations considers construction sites very special locations, devoting the whole of Section 704 to their requirements. A construction site installation should be tested and inspected in accordance with Part 6 of the IEE Regulations every 3 months throughout the construction period.

The source of supply for the temporary installation may be from a petrol or diesel generating set or from the local supply company. When the local electricity company provides the supply, the incoming cable must be terminated in a waterproof and locked enclosure to prevent unauthorized access and provide metering arrangements.

IEE Regulations 704.313, 704.410.3.10 and 411.8 tell us that reduced low voltage is strongly *preferred* for portable hand lamps and tools used on construction and demolition sites.

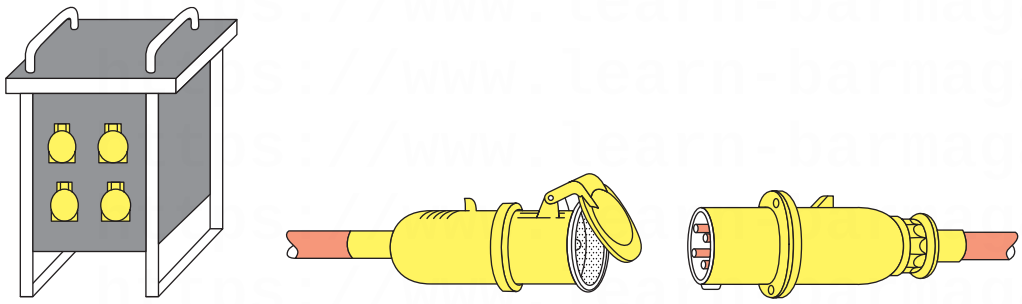

(a) (b)

Figure 8.15 110V distribution unit and cable connector, suitable for construction site electrical supplies: (a) reduced-voltage distribution unit incorporating industrial sockets to BS EN 60309 and (b) industrial plug and connector.

The distribution of electrical supplies on a construction site would typically be as follows:

- 400 V three phase for supplies to major items of plant having a rating above 3.75 kW such as cranes and lifts. These supplies must be wired in armoured cables.
- 230 V single phase for supplies to items of equipment which are robustly installed such as floodlighting towers, small hoists and site offices. These supplies must be wired in armoured cable unless run inside the site offices.
- 110 V single phase for supplies to all mobile hand tools and all mobile lighting equipment. The supply is usually provided by a reduced voltage distribution unit which incorporates splashproof sockets fed from a centre-tapped 110 V transformer. This arrangement limits the voltage to earth to 55 V, which is recognized as safe in most locations. A 110 V distribution unit is shown in Fig. 8.15. Edison screw lamps are used for 110 V lighting supplies so that they are not interchangeable with 230 V site office lamps.

Safety first

Construction sites
- low voltage or
- battery tools must be used.

There are occasions when even a 110 V supply from a centre-tapped transformer is too high; for example, supplies to inspection lamps for use inside damp or confined places. In these circumstances a safety extra-low voltage (SELV) supply would be required.

Industrial plugs have a keyway which prevents a tool from one voltage being connected to the socket outlet of a different voltage. They are also colour coded for easy identification as follows:

400 V – red

230 V – blue

110 V – yellow

50 V – white

25 V – violet.

Agricultural and horticultural installations

Especially adverse installation conditions are to be encountered on agricultural and horticultural installations because of the presence of livestock, vermin, dampness, corrosive substances and mechanical damage. The 17th edition of the IEE Wiring Regulations considers these installations very special locations and has devoted the whole of Section 705 to their requirements. In situations accessible to livestock the electrical equipment should be of a type which is appropriate for the external influences likely to occur, and should have at least protection IP44; that is, protection against solid objects and water splashing from any direction (IEE Regulation 705.512.2, see also Fig. 8.14).

In buildings intended for livestock, all fixed wiring systems must be inaccessible to the livestock and cables liable to be attacked by vermin must be suitably protected (IEE Regulation 705.513.2).

PVC cables enclosed in heavy-duty PVC conduit are suitable for installations in most agricultural buildings. All exposed and extraneous metalwork must be provided with supplementary equipotential bonding in areas where livestock is kept (IEE Regulation 705.415.2.1). In many situations, waterproof socket outlets to BS 196 must be installed. All socket outlet circuits must be protected by an

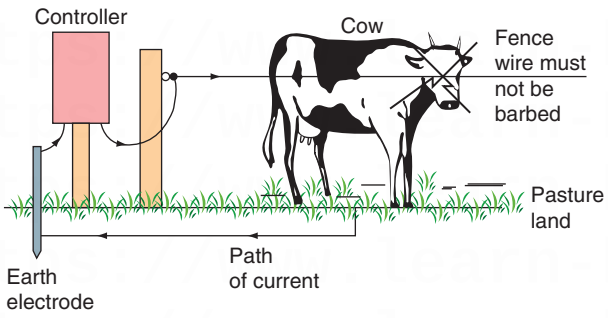

Figure 8.16 Farm animal control by electric fence.

RCD complying with the appropriate British Standard and the operating current must not exceed 30 mA.

Cables buried on agricultural or horticultural land should be buried at a depth of not less than 600 mm, or 1000 mm where the ground may be cultivated, and the cable must have an armour sheath and be further protected by cable tiles. Overhead cables must be insulated and installed so that they are clear of farm machinery or placed at a minimum height of 6 m to comply with IEE Regulation 705.522.

Horses and cattle have a very low body resistance, which makes them susceptible to an electric shock at voltages lower than 25 V r.m.s. The sensitivity of farm animals to electric shock means that they can be contained by an electric fence. An animal touching the fence receives a short pulse of electricity which passes through the animal to the general mass of earth and back to an earth electrode sunk near the controller, as shown in Fig. 8.16. The pulses are generated by a capacitor–resistor circuit inside the controller which may be mains or battery operated (capacitor–resistor circuits are discussed in Chapter 9). There must be no risk to any human coming into contact with the controller, which should be manufactured to BS 2632. The output voltage of the controller must not exceed 10 kV and the energy must not be greater than 5 J. The duration of the pulse must not be greater than 1.5 ms and the pulse must never have a frequency greater than one pulse per second. This shock level is very similar to that which can be experienced by touching a spark plug lead on a motor car. The energy levels are very low at 5 J. There are 3.6 million joules of energy in 1 kWh.

Earth electrodes connected to the earth terminal of an electric fence controller must be separate from the earthing system of any other circuit and should be situated outside the resistance area of any electrode used for protective earthing. The electric fence controller and the fence wire must be installed so that they do not come into contact with any power, telephone or radio systems, including poles. Agricultural and horticultural installations should be tested and inspected in accordance with Part 6 of the Wiring Regulations every 3 years.

Caravans and caravan sites

The electrical installations on caravan sites, and within caravans, must comply in all respects with the wiring regulations for buildings. All the dangers which exist in buildings are present in and around caravans, including the added dangers associated with repeated connection and disconnection of the supply and the flexing of the caravan installation in a moving vehicle. The 17th edition of the IEE

Safety first

Electric shock

- Animals and humans must be protected against electric shock.

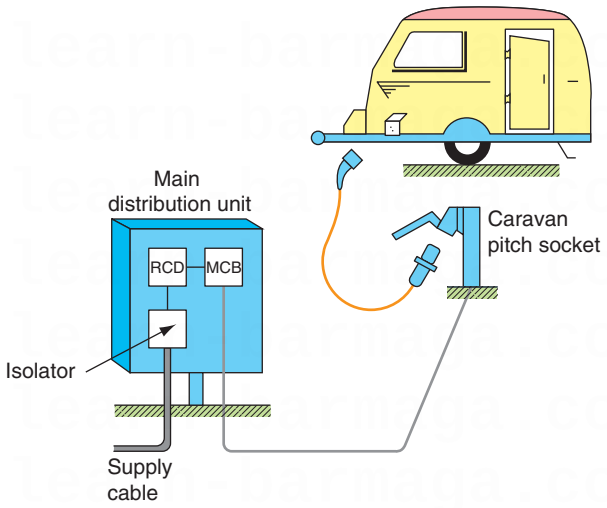

Figure 8.17 Electrical supplies to caravans.

Regulations has devoted Section 721 to the electrical installation in caravans and motor caravans and Section 708 to caravan parks.

Touring caravans must be supplied from a 16A industrial type socket outlet adjacent to the caravan park pitch, similar to that shown in Fig. 8.15. Each socket outlet must be provided with individual overcurrent protection and an individual residual current circuit breaker with a rated tripping current of 30 mA (IEE Regulations 708.553.1.12 and 708.553.1.13). The distance between the caravan connector and the site socket outlet must not be more than 20 m (IEE Regulation 708.512.3). These requirements are shown in Fig. 8.17.

The supply cables must be installed outside the pitch area and be buried at a depth of at least 0.6 m (IEE Regulation 708.521.1.1).

The caravan or motor caravan must be provided with a mains isolating switch and an RCD to break all live conductors (IEE Regulation 721.411). An adjacent notice detailing how to connect and disconnect the supply safely must also be provided, as shown in IEE Regulation 721.514. Electrical equipment must not be installed in fuel storage compartments (IEE Regulation 721.528.3.5). Caravans flex when being towed, and therefore the installation must be wired in flexible or stranded conductors of at least 1.5 mm cross-section. The conductors must be supported on horizontal runs at least every 25 cm and the metalwork of the caravan and chassis must be bonded with 4.0 mm^2 cable.

The wiring of the extra low-voltage battery supply must be run in such a way that it does not come into contact with the 230 V wiring system (IEE Regulation 721.528.1).

The caravan should be connected to the pitch socket outlet by means of a flexible cable, not longer than 25 m and having a minimum cross-sectional area of 2.5 mm^2 or as detailed in Section 721 of the IEE Regulations.

Because of the mobile nature of caravans it is recommended that the electrical installation be tested and inspected at intervals considered appropriate, between 1 and 3 years but not exceeding 3 years (IEE Regulation 721.514.1).

Key fact

Caravans

- every caravan pitch must have at least one 16A industrial socket
- each socket must have RCD and overcurrent protection
- IEE Regulation 708.553.

Bathroom installations

Rooms containing a fixed bath tub or shower basin are considered an area of increased shock risk and, therefore, additional regulations are specified in

Section 701 of the IEE Regulations. This is to reduce the risk of electric shock to people in circumstances where body resistance is lowered because of contact with water. The regulations can be summarized as follows:

- Socket outlets must not be installed and no provision is made for connection of portable appliances unless the socket outlet can be fixed 3 metres horizontally beyond the zone 1 boundary within the bath or shower room (IEE Regulation 701.512.4).
- Only shaver sockets which comply with BS EN 60742, that is those which contain an isolating transformer, may be installed in zone 2 or outside the zones in the bath or shower room (IEE Regulation 701.512.4).
- All circuits in a bath or shower room, that is both power and lighting, must be additionally protected by an RCD having a rated maximum operating current of 30 mA (IEE Regulation 701.411.3.3).
- There are restrictions as to where appliances, switchgear and wiring accessories may be installed. See *Zones for bath and shower rooms* below.
- Local supplementary equipotential bonding (IEE Regulation 701.415.2) must be provided to all gas, water and central heating pipes in addition to metallic baths, *unless the following two requirements are both met*:
  - (i) all bathroom circuits, both lighting and power, are protected by a 30 mA RCD and
  - (ii) the bath or shower is located in a building with protective equipotential bonding in place as described in Fig. 7.11 (IEE Regulation 411.3.1.2).

Note: Local supplementary equipotential bonding may be an additional requirement of the Local Authority regulations in, for example, licensed premises, student accommodation and rented property.

Zones for bath and shower rooms

Locations that contain a bath or shower are divided into zones or separate areas as shown in Fig. 8.18.

Zone 0 – the bath tub or shower basin itself, which can contain water and is, therefore, the most dangerous zone

Zone 1 – the next most dangerous zone in which people stand in water

Zone 2 – the next most dangerous zone in which people might be in contact with water

Outside Zones – people are least likely to be in contact with water but are still in a potentially dangerous environment and the general IEE Regulations apply.

- spaces under the bath which are accessible '*only with the use of a tool*' are outside zones
- spaces under the bath which are accessible '*without the use of a tool*' are zone 1.

Electrical equipment and accessories are restricted within the zones.

Zone 0 – being the most potentially dangerous zone, for all practical purposes no electrical equipment can be installed in this zone. However, the IEE Regulations permit that where SELV fixed equipment with a rated voltage not exceeding 12 V a.c. cannot be located elsewhere, it may be installed in this zone (IEE Regulation 701.55). The electrical equipment must have at least IPX7 protection against total immersion in water (IEE Regulation 701.512.2).

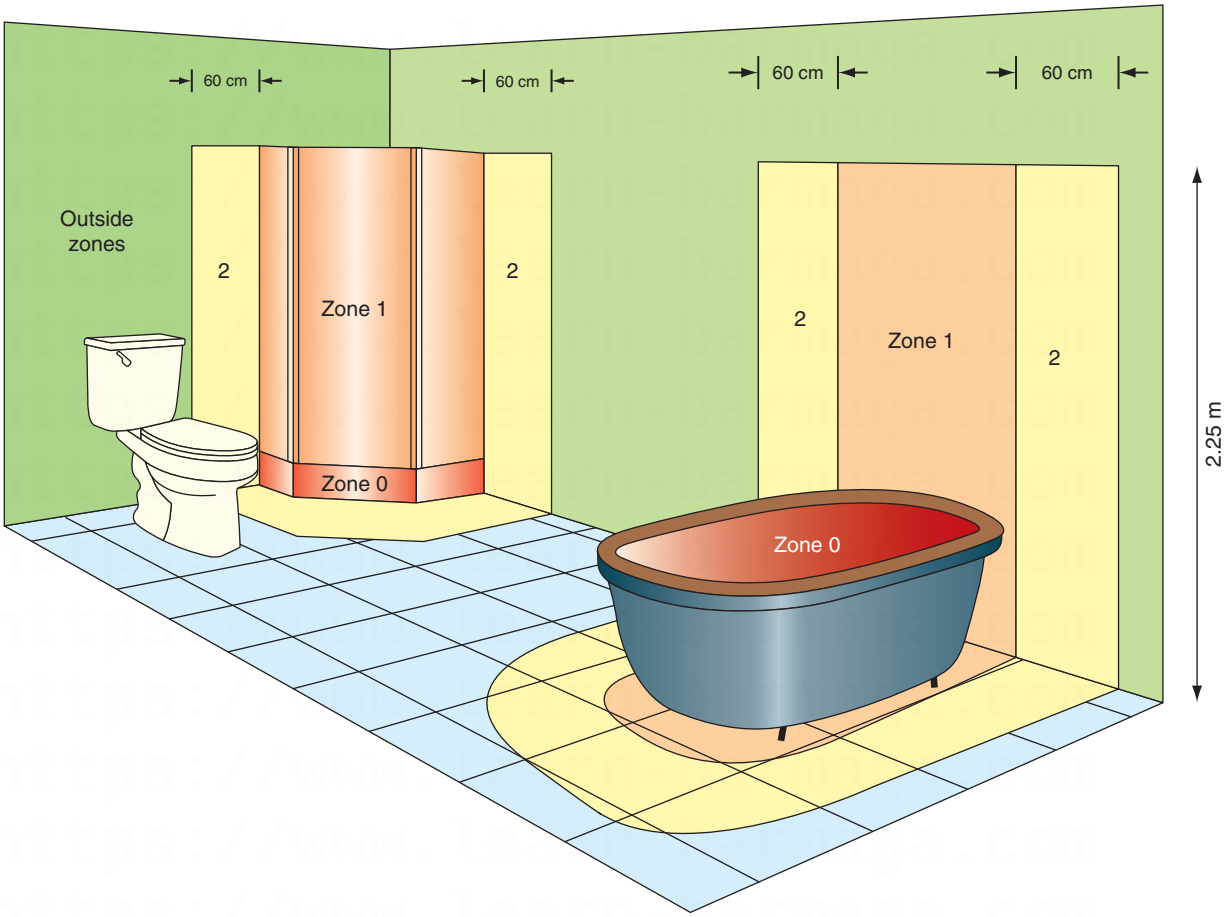

Figure 8.18 Bathroom zone dimensions. (Any window recess is zone 2.)

Zone 1 – water heaters, showers and shower pumps and SELV fixed equipment may be installed in zone 1. The electrical equipment must have at least IPX4 protection against water splashing from any direction. If the electrical equipment may be exposed to water jets from, for example, commercial cleaning equipment, then the electrical equipment must have IPX5 protection. (The Index of Protection codes were discussed earlier and are shown in Fig. 8.14.)

Zone 2 – luminaires and fans, and equipment from zone 1 plus shaver units to BS EN 60742 may be installed in zone 2. The electrical equipment must be suitable for installation in that zone according to the manufacturer's instructions and have at least IPX4 protection against splashing or IPX5 protection if commercial cleaning is anticipated.

Outside Zones – appliances are allowed plus accessories except socket outlets unless the location containing the bath or shower is very big and the socket outlet can be installed at least 3 m horizontally beyond the zone 1 boundary (IEE Regulation 701.512.3) and has additional RCD protection (IEE Regulation 701.411.3.3).

If underfloor heating is installed in these areas it must have an overall earthed metallic grid or the heating cable must have an earthed metallic sheath, which is connected to the protective conductor of the supply circuit (IEE Regulation 701.753).

Key fact

Bathrooms

- All bathroom circuits, both power and lighting, must have additional RCD protection.

Supplementary equipotential bonding

Modern plumbing methods make considerable use of non-metals (PTFE tape on joints, for example). Therefore, the metalwork of water and gas installations cannot be relied upon to be continuous throughout.

The IEE Regulations describe the need to consider additional protection by supplementary equipotential bonding in situations where there is a high risk of electric shock (e.g. in kitchens and bathrooms) (IEE Regulation 415.2).

In kitchens, supplementary bonding of hot and cold taps, sink tops and exposed water and gas pipes *is only required* if an earth continuity test proves that they are not already effectively and reliably connected to the protective equipotential bonding, having negligible impedance, by the soldered pipe fittings of the installation. If the test proves unsatisfactory, the metalwork must be bonded using a single-core copper conductor with PVC green/yellow insulation, which will normally be 4 mm^2 for domestic installations but must comply with IEE Regulation 543.1.1.

In rooms containing a fixed bath or shower, supplementary equipotential bonding conductors *must* be installed to reduce to a minimum the risk of an electric shock unless the following *two* conditions are met:

(i) all bathroom circuits are protected by a fuse or MCB plus a 30 mA RCD and
(ii) the bathroom is located in a building with a protective equipotential bonding system in place (IEE Regulation 701.415.2). Such a system is shown in Fig. 7.11.

Supplementary equipotential bonding conductors in domestic premises will normally be of 4 mm^2 copper with PVC insulation to comply with IEE Regulation 543.1.1 and must be connected between all exposed metalwork (e.g. between metal baths, bath and sink taps, shower fittings, metal waste pipes and radiators) as shown in Fig. 8.19.

The bonding connection must be made to a cleaned pipe, using a suitable bonding clip. Fixed at, or near, the connection must be a permanent label saying 'Safety electrical connection – do not remove' (IEE Regulation 514.3) as shown in Fig. 8.20.

Restoring systems to working order

When the fault has been identified and repaired as described in this chapter, the circuit, system or equipment must be inspected, tested and functional checks carried out as required by IEE Regulations Chapter 61.

The purpose of inspecting and testing the repaired circuit, system or equipment is to confirm the electrical integrity of the system before it is re-energized.

The tests recommended by Part 6 of the IEE Regulations are:

1. Test the continuity of the protective conductors including the protective equipotential and supplementary bonding conductors.
2. Test the continuity of all ring final circuit conductors.
3. Test the insulation resistance between live conductors and earth.
4. Test the polarity to verify that single pole control and protective devices are connected in the line conductor only.
5. Test the earth electrode resistance where the installation incorporates an earth electrode as a part of the earthing system.

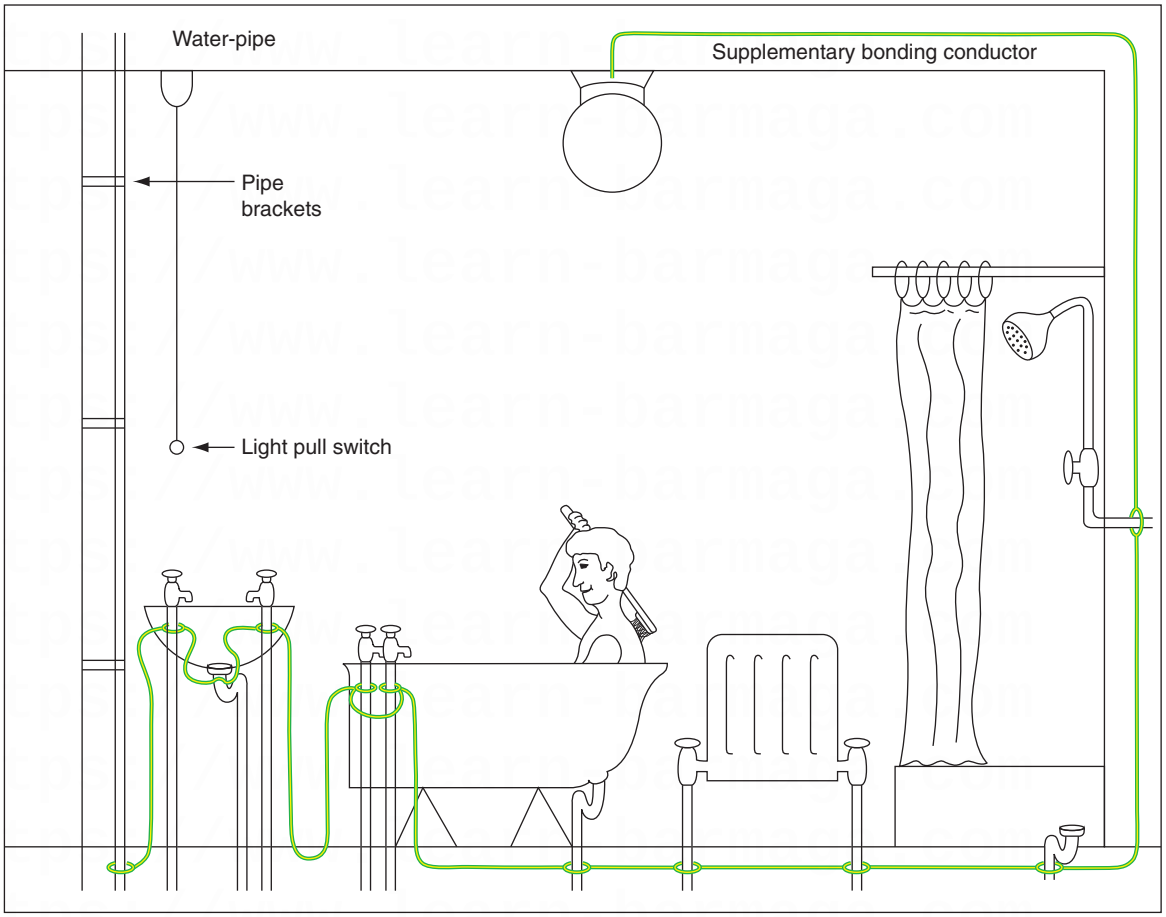

Figure 8.19 Supplementary equipotential bonding in bathrooms to metal pipework.

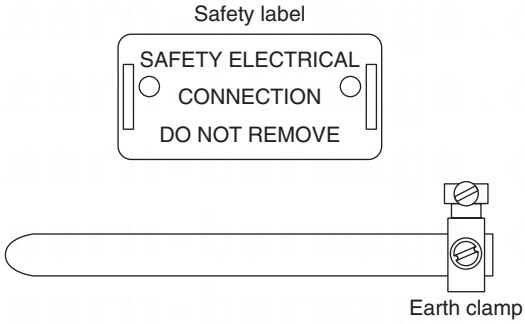

Figure 8.20 Typical earth bonding clamp.

The supply may now be connected and the following tests carried out:

6 Test the polarity using an approved test lamp or voltage indicator.
7 Test the earth fault loop impedance where the protective measures used require a knowledge of earth fault loop impedance.

These tests *where relevant* must be carried out in the order given above to comply with IEE Regulation 612.1.

If any test indicates a failure, that test and any preceding test must be repeated after the fault has been rectified. This is because the earlier tests may have been influenced by the fault.

The above tests are described in Chapter 7 of this book, in Part 6 of the IEE Regulations and in Guidance Note 3 published by the IEE.

Functional testing (IEE Regulation 612.13)

Following the carrying out of the relevant tests described above we must carry out functional testing to ensure that:

- the circuit, system or equipment works correctly;
- it works as it did before the fault occurred;
- it continues to comply with the original specification;
- it is electrically safe;
- it is mechanically safe;
- it meets all the relevant regulations, in particular the IEE Regulations (BS 7671).

IEE Regulation 612.13 tells us to check the effectiveness of the following assemblies to show that they are properly mounted, adjusted and installed:

- Residual current devices (RCDs)
- Switchgear
- Control gear
- Controls and interlocks.

Safety first

Testing

The tests indicated in Part 6 of the Regulations:

- must be carried out in the order given so that essential safety features are proved first.
- IEE Regulation 612.1.

Restoration of the building structure

If the structure, or we sometimes call it the fabric, of the building has been damaged as a result of your electrical repair work, it must be made good before you hand the installation, system or equipment back to the client.

Where a wiring system passes through elements of the building construction such as floors, walls, roofs, ceilings, partitions or cavity barriers, the openings remaining after the passage of the wiring system must be sealed according to the degree of fire resistance demonstrated by the original building material (IEE Regulation 527.2).

You should always make good the structure of the building using appropriate materials ***before*** you leave the job so that the general building structural performance and fire safety are not reduced. If additionally there is a little cosmetic plastering and decorating to be done, then who actually will carry out this work is a matter of negotiation between the client and the electrical contractor.

Disposal of waste

Having successfully diagnosed the electrical fault and carried out the necessary repairs or having completed any work in the electrotechnical industry, we come to the final practical task, leaving the site in a safe and clean condition and the removal of any waste material. This is an important part of your company's 'good customer relationships' with the client. We also know from Chapter 1 of this book that we have a 'duty of care' for the waste that we produce as an electrical company (see Chapter 1, under the sub-heading Controlled Waste Regulations 1998).

We have also said many times in this book that having a good attitude to health and safety, working conscientiously and neatly, keeping passageways clear

Safety first

Fire

If your electrical activities cause damage to the fabric of the building then:

- the openings remaining must be sealed according to the degree of fire resistance demonstrated by the original building material.
- IEE Regulation 527.2.

and regularly tidying up the workplace is the sign of a good and competent craftsman. But what do you do with the rubbish that the working environment produces? Well:

- All the packaging material for electrical fittings and accessories usually goes into either your employer's skip or the skip on site designated for that purpose.
- All the off-cuts of conduit, trunking and tray also go into the skip.
- In fact, most of the general site debris will probably go into the skip and the waste disposal company will take the skip contents to a designated local council landfill area for safe disposal.
- The part coils of cable and any other reusable leftover lengths of conduit, trunking or tray will be taken back to your employer's stores area. Here it will be stored for future use and the returned quantities deducted from the costs allocated to that job.
- What goes into the skip for normal disposal into a landfill site is usually a matter of common sense. However, some substances require special consideration and disposal. We will now look at asbestos and large quantities of used fluorescent tubes which are classified as 'special waste' or 'hazardous waste'.

Asbestos is a mineral found in many rock formations. When separated it becomes a fluffy, fibrous material with many uses. It was used extensively in the construction industry during the 1960s and 1970s for roofing material, ceiling and floor tiles, fire resistant board for doors and partitions, for thermal insulation and commercial and industrial pipe lagging.

In the buildings where it was installed some 40 years ago, when left alone, it does not represent a health hazard, but those buildings are increasingly becoming in need of renovation and modernization. It is in the dismantling and breaking up of these asbestos materials that the health hazard increases. Asbestos is a serious health hazard if the dust is inhaled. The tiny asbestos particles find their way into delicate lung tissue and remain embedded for life, causing constant irritation and eventually, serious lung disease.

Working with asbestos materials is not a job for anyone in the electrotechnical industry. If asbestos is present in situations or buildings where you are expected to work, it should be removed by a specialist contractor before your work commences. Specialist contractors, who will wear fully protective suits and use breathing apparatus, are the only people who can safely and responsibly carry out the removal of asbestos. They will wrap the asbestos in thick plastic bags and store them temporarily in a covered and locked skip. This material is then disposed of in a special landfill site with other toxic industrial waste materials and the site monitored by the local authority for the foreseeable future.

There is a lot of work for electrical contractors in many parts of the country, updating and improving the lighting in government buildings and schools. This work often involves removing the old fluorescent fittings hanging on chains or fixed to beams and installing a suspended ceiling and an appropriate number of recessed modular fluorescent fittings. So what do we do with the old fittings? Well, the fittings are made of sheet steel, a couple of plastic lampholders, a little cable, a starter and ballast. All of these materials can go into the ordinary skip. However, the fluorescent tubes contain a little mercury and fluorescent powder with toxic elements, which cannot be disposed of in the normal land fill sites. Hazardous Waste Regulations were introduced in July 2005 and under these regulations lamps and tubes are classified as hazardous. While each

lamp contains only a small amount of mercury, vast numbers of lamps and tubes are disposed of in the United Kingdom every year resulting in a significant environmental threat.

The environmentally responsible way to dispose of fluorescent lamps and tubes is to recycle them.

The process usually goes like this:

- Your employer arranges for the local electrical wholesaler to deliver a plastic waste container of an appropriate size for the job.
- Expired lamps and tubes are placed whole into the container, which often has a grating inside to prevent the tubes breaking when being transported.
- When the container is full of used lamps and tubes, you telephone the electrical wholesaler and ask them to pick up the filled container and deliver it to one of the specialist recycling centres.
- Your electrical company will receive a 'Duty of Care Note' and full recycling documents which ought to be filed safely as proof that the hazardous waste was recycled safely.
- The charge is approximately 50 p for each 1800 mm tube and this cost is passed on to the customer through the final account.

The Control of Substances Hazardous to Health (COSHH) Regulations and the Controlled Waste Regulations 1998 have encouraged specialist companies to set up businesses dealing with the responsible disposal of toxic waste material. Specialist companies have systems and procedures which meet the relevant regulation, and they will usually give an electrical company a certificate to say that they have disposed of a particular waste material responsibly. The system is called 'Waste Transfer Notes'. The notes will identify the type of waste, by whom it was taken and its final place of disposal. The person handing over the waste material to the waste disposal company will be given a copy of the notes and this must be filed in a safe place, probably in the job file or a dedicated file. It is the proof that your company has carried out its duty of care to dispose of the waste responsibly. The cost of this service is then passed on to the customer. These days, large employers and local authorities insist that waste is disposed of properly.

The Environmental Health Officer at your local Council Offices will always give advice and point you in the direction of specialist companies dealing with toxic waste disposal.

Safety first

Waste

- Clean up before you leave the job.
- Put waste in the correct skip.
- Recycle used lamps and tubes.
- Get rid of all waste responsibly.

Hand over to the client

Handing over the repaired circuit, system or equipment is an important part of the fault diagnosis and repair process. You are effectively saying to the client 'here is your circuit, system or equipment, it is now safe to use and it works as it should work'.

The client will probably be interested in the following:

- What has been done to identify and repair the fault?
- The possible reasons why the fault occurred and recommendations which will prevent a recurrence of the problem.
- A demonstration of the operation of the circuit, system or equipment to show that the fault has been fully rectified.
- Finally, the handing over of certificates of test results and manufacturer's instructions, if new equipment has been installed.

Check your understanding

When you have completed these questions, check out the answers at the back of the book.

Note: more than one multiple choice answer may be correct.

1 To diagnose and find electrical faults the ideal person will:
   a. first isolate the whole system
   b. use a logical and methodical approach
   c. carry out the relevant tests recommended by Part 6 of the IEE Regulations
   d. recognize his own limitations and seek help and guidance where necessary.

2 The 'symptoms' of an electrical fault might be:
   a. there is a complete loss of power
   b. nothing unusual is happening
   c. there is a local or partial loss of power
   d. the local isolator switch is locked off.

3 A fault is not a natural occurrence, it is not planned and occurs unexpectedly. It may be caused by:
   a. regular maintenance
   b. negligence
   c. misuse
   d. abuse.

4 The main lighting in a room having only one entrance would probably be controlled by a:
   a. pull switch
   b. intermediate switch
   c. two-way switch
   d. one-way switch.

5 The main lighting in a room having two entrances would probably be controlled by a:
   a. pull switch
   b. intermediate switch
   c. two-way switch
   d. one-way switch.

6 Electrical test equipment must always:
   a. work on a.c. and d.c. supplies
   b. have an in date calibration certificate
   c. incorporate a range selector switch
   d. incorporate probes which comply with GS 38.

7 A final circuit feeding socket outlets with a rated current of less than 20A and used by ordinary persons for general use must always have:
   a. overcurrent protection
   b. 30 mA RCD protection
   c. splash proof protection
   d. incorporate an industrial type socket outlet.

8 The IEE Regulation test for 'continuity of conductors' tests:
   a. line conductors
   b. neutral conductors
   c. CPCs
   d. protective equipotential bonding conductors.

9 The IEE Regulation test for 'continuity of ring final circuit conductors' tests:
   a. line conductors
   b. neutral conductors
   c. CPCs
   d. protective equipotential bonding conductors.

10 The IEE Regulation test for 'insulation resistance' tests:
   a. the effectiveness of conductors' insulation
   b. the earth loop impedance
   c. the earth conductors to the earth electrode
   d. that protective devices are connected in the line conductor.

11 The IEE Regulation test for 'polarity' tests:
   a. the earth loop impedance
   b. the effective operation of RCDs
   c. the effective operation of controls and switchgear
   d. that protective devices are connected in the line conductor.

12 The IEE Regulation test for 'functional testing' tests:
   a. the earth loop impedance
   b. the effective operation of RCDs
   c. the effective operation of controls and switchgear
   d. that protective devices are connected in the line conductor.

13 State three symptoms of an electrical fault.

14 State three causes of electrical faults.

15 Make a list of 10 places where faults might occur on an electrical system.

16 List four steps involved in fault finding.

17 State five requirements for safe working procedures when fault finding.

18 State four factors that might influence the decision to either repair or replace faulty equipment.

19 State four safety features you would look for before selecting test equipment.

20 State the advantages and dangers associated with optical fibre cables.

21 State briefly the meaning of ‘static electricity’. What action is taken to reduce the build-up of a static charge on an electrical system?

22 State the problems which an unexpected mains failure of IT equipment would create.

23 Use a sketch to describe ‘clean supplies’, ‘spikes’ and ‘noise’ on IT supplies.

24 Briefly describe what we mean by secure supplies and UPS with regard to IT equipment.

25 Emergency supplies are often provided by storage batteries that are secondary cells. What is the advantage of a secondary cell in these circumstances?

26 Use bullet points to list very briefly the requirements of testing and commissioning an installation following the repair of a fault.

27 Use bullet points to list very briefly the six reasons for carrying out functional testing following the repair of a fault.

28 The IEE Regulation 612.13 advises us to check the effectiveness of four assemblies to show that they are properly mounted, adjusted and installed. Name them.

29 State the reasons why it is important to make good any damage to the fabric of a building as a result of your electrotechnical activities. State how you would make good damage to a brick wall and a concrete floor where a 100×100 mm trunking passes through.

30 Very briefly state the responsibilities of an electrotechnical company with regard to the disposal of waste material.

31 State what we mean by ‘ordinary waste’ and ‘hazardous waste’ and give examples of each.

32 Very briefly describe the system of ‘Waste Transfer Notes’.

33 Very briefly describe four points you would discuss with a client when handing over a repaired faulty system, circuit or piece of equipment.

CHAPTER 9

Electrical scientific theory

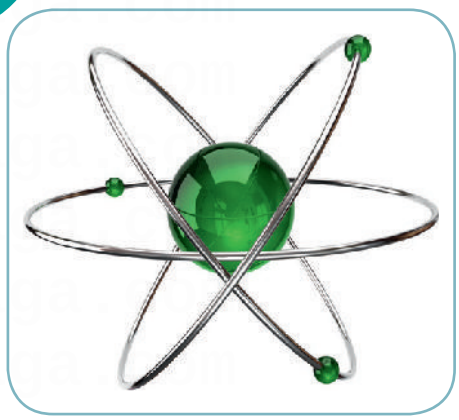

Unit 309 of the City and Guilds 2357 syllabus

Understanding the electrical principles associated with the design, building, installation and maintenance of electrical equipment and systems.

Online Material WWW

This chapter has free associated content, including animations and instructional videos, to support your learning

When you see the logo, visit the website below to access this material:

www.elsevierdirect.com/companions/9780080966281

In this final chapter of Basic Electrical Installation Work we look at the electrical scientific principles and competencies required of a qualified electrician. This chapter covers the requirements of the City and Guilds 2357 Diploma in Installing Electrotechnical Systems and Equipment (Buildings, Structures and the Environment) unit number 309.

Units

Very early units of measurement were based on the things easily available – the length of a stride, the distance from the nose to the outstretched hand, the weight of a stone and the time-lapse of one day. Over the years, new units were introduced and old ones were modified. Different branches of science and engineering were working in isolation, using their own units, and the result was an overwhelming variety of units.

In all branches of science and engineering there is a need for a practical system of units which everyone can use. In 1960, the General Conference of Weights and Measures agreed to an international system called the Système International d'Unités (abbreviated to **SI units**).

SI units are based upon a small number of fundamental units from which all other units may be derived. Table 9.1 describes some of the basic units that we shall be using in our electrical studies.

Definition

SI units are based upon a small number of fundamental units from which all other units may be derived.

Basic Electrical Installation Work. 978-0-08-096628-1

Table 9.1 Basic SI units

Quantity	Measure of	Basic unit	Symbol	Notes
Area	Length × length	Metre squared	m^2	
Current I	Electric current	Ampere	A	
Energy	Ability to do work	Joule	J	Joule is a very small unit 3.6×10^6 J = 1 kWh
Force	The effect on a body	Newton	N	
Frequency	Number of cycles	Hertz	Hz	Mains frequency is 50 Hz
Length	Distance	Metre	m	
Mass	Amount of material	Kilogram	Kg	One metric tonne = 1000 kg
Magnetic flux Φ	Magnetic energy	Weber	Wb	
Magnetic flux density B	Number of lines of magnetic flux	Tesla	T	
Potential or pressure	Voltage	Volt	V	
Period T	Time taken to complete one cycle	Second	s	The 50 Hz mains supply has a period of 20 ms
Power	Rate of doing work	Watt	W	
Resistance	Opposition to current flow	Ohm	Ω	
Resistivity	Resistance of a sample piece of material	Ohm metre	ρ	Resistivity of copper is $17.5 \times 10^{-9}\,\Omega$m
Temperature	Hotness or coldness	Kelvin	K	0°C = 273 K. A change of 1 K is the same as 1°C
Time	Time	Second	s	60 s = 1 min 60 min = 1 h
Weight	Force exerted by a mass	Kilogram	kg	1000 kg = 1 tonne

Note: A more detailed description can be found in this chapter.

Table 9.2 Symbols and multiples for use with SI units

Prefix	Symbol	Multiplication factor		
Mega	M	$\times 10^6$	or	×1,000,000
Kilo	k	$\times 10^3$	or	×1000
Hecto	h	$\times 10^2$	or	×100
Deca	da	×10	or	×10
Deci	d	$\times 10^{-1}$	or	÷10
Centi	c	$\times 10^{-2}$	or	÷100
Milli	m	$\times 10^{-3}$	or	÷1000
Micro	μ	$\times 10^{-6}$	or	÷1,000,000

Like all metric systems, SI units have the advantage that prefixes representing various multiples or sub-multiples may be used to increase or decrease the size of the unit by various powers of 10. Some of the more common prefixes and their symbols are shown in Table 9.2.

Basic circuit theory

All matter is made up of atoms which arrange themselves in a regular framework within the material. The atom is made up of a central, positively charged nucleus, surrounded by negatively charged electrons. The electrical properties of a material depend largely upon how tightly these electrons are bound to the central nucleus.

A **conductor** is a material in which the electrons are loosely bound to the central nucleus and are, therefore, free to drift around the material at random from one atom to another, as shown in Fig. 9.1(a). Materials which are good conductors include copper, brass, aluminium and silver.

An **insulator** is a material in which the outer electrons are tightly bound to the nucleus, so there are no free electrons to move around the material. Good insulating materials are PVC, rubber, glass and wood.

If a battery is attached to a conductor as shown in Fig. 9.1(b), the free electrons drift purposefully in one direction only. The free electrons close to the positive plate of the battery are attracted to it since unlike charges attract, and the free electrons near the negative plate will be repelled from it. For each electron entering the positive terminal of the battery, one will be ejected from the negative terminal, so the number of electrons in the conductor remains constant.

The drift of electrons within a conductor is known as an **electric current**, measured in amperes and given the symbol *I*.

For a current to continue to flow, there must be a complete circuit for the electrons to move around. If the circuit is broken by opening a switch, for example, the electron flow and therefore the current will stop immediately.

To cause a current to flow continuously around a circuit, a driving force is required, just as a circulating pump is required to drive water around a central heating system. This driving force is the *electromotive force* (e.m.f.). Each time an

Definition

A *conductor* is a material in which the electrons are loosely bound to the central nucleus and are, therefore, free to drift around the material at random from one atom to another, as shown in Fig. 9.1(a). Materials which are good conductors include copper, brass, aluminium and silver.

Definition

An *insulator* is a material in which the outer electrons are tightly bound to the nucleus, so there are no free electrons to move around the material. Good insulating materials are PVC, rubber, glass and wood.

Definition

The drift of electrons within a conductor is known as an *electric current*, measured in amperes and given the symbol *I*.

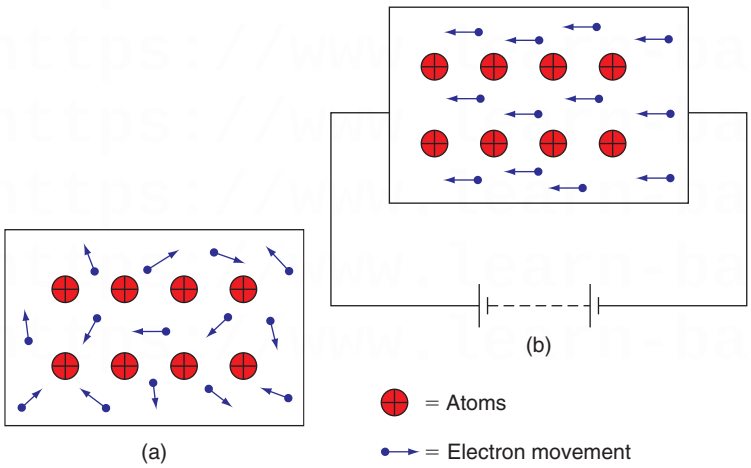

Figure 9.1 Atoms and electrons on a material.

Definition

The *potential difference* (p.d.) is the change in energy levels measured across the load terminals. This is also called the volt drop or terminal voltage, since e.m.f. and p.d. are both measured in volts.

Definition

Every circuit offers some opposition to current flow, which we call the circuit *resistance,* measured in ohms (symbol Ω).

WWW

Definition

Ohm's law, which says that the current passing through a conductor under constant temperature conditions is proportional to the potential difference across the conductor.

electron passes through the source of e.m.f., more energy is provided to send it on its way around the circuit.

An e.m.f. is always associated with energy conversion, such as chemical to electrical in batteries and mechanical to electrical in generators. The energy introduced into the circuit by the e.m.f. is transferred to the load terminals by the circuit conductors.

The **potential difference** (p.d.) is the change in energy levels measured across the load terminals. This is also called the volt drop or terminal voltage, since e.m.f. and p.d. are both measured in volts. **Resistance** in every circuit offers some opposition to current flow, which we call the circuit *resistance*, measured in ohms (symbol Ω), to commemorate the famous German physicist Georg Simon Ohm, who was responsible for the analysis of electrical circuits.

Ohm's law

In 1826, Ohm published details of an experiment he had done to investigate the relationship between the current passing through and the potential difference between the ends of a wire. As a result of this experiment, he arrived at a law, now known as **Ohm's law**, which says that the current passing through a conductor under constant temperature conditions is proportional to the potential difference across the conductor. This may be expressed mathematically as

$$V = I \times R(V)$$

Transposing this formula, we also have

$$I = \frac{V}{R}(\text{A}) \quad \text{and} \quad R = \frac{V}{I}(\Omega)$$

Example 1

An electric heater, when connected to a 230 V supply, was found to take a current of 4 A. Calculate the element resistance.

$$R = \frac{V}{I}$$

$$\therefore R = \frac{230\ \text{V}}{4\ \text{A}} = 57.5\,\Omega$$

Example 2

The insulation resistance measured between phase conductors on a 400 V supply was found to be 2 MΩ. Calculate the leakage current.

$$I = \frac{V}{R}$$

$$\therefore I = \frac{400\ \text{V}}{2 \times 10^6\ \Omega} = 200 \times 10^{-6}\ \text{A} = 200\ \mu\text{A}$$

Example 3

When a 4 Ω resistor was connected across the terminals of an unknown d.c. supply, a current of 3 A flowed. Calculate the supply voltage.

$$V = I \times R$$
$$\therefore V = 3\text{A} \times 4\Omega = 12\text{V}$$

Resistivity

The resistance or opposition to current flow varies for different materials, each having a particular constant value. If we know the resistance of, say, 1 m of a material, then the resistance of 5 m will be five times the resistance of 1 m.

The **resistivity** (symbol ρ – the Greek letter 'rho') of a material is defined as the resistance of a sample of unit length and unit cross-section. Typical values are given in Table 9.3. Using the constants for a particular material we can calculate the resistance of any length and thickness of that material from the equation

$$R = \frac{\rho l}{a}(\Omega)$$

where

ρ = the resistivity constant for the material (Ω m)
l = the length of the material (m)
a = the cross-sectional area of the material (m^2).

Table 9.3 gives the resistivity of silver as $16.4 \times 10^{-9}\,\Omega\,\text{m}$, which means that a sample of silver 1 m long and 1 m in cross-section will have a resistance of $16.4 \times 10^{-9}\,\Omega$.

Definition

The *resistivity* (symbol ρ – the Greek letter 'rho') of a material is defined as the resistance of a sample of unit length and unit cross-section.

Example 1

Calculate the resistance of 100 m of copper cable of 1.5 mm^2 cross-sectional area (csa) if the resistivity of copper is taken as $17.5 \times 10^{-9}\,\Omega\,\text{m}$.

$$R = \frac{\rho l}{a}(\Omega)$$

$$\therefore R = \frac{17.5 \times 10^{-9}\ \Omega\ \text{m} \times 100\ \text{m}}{1.5 \times 10^{-6}\ \text{m}^2} = 1.16\ \Omega$$

Key fact

Resistance: If the length is doubled, resistance will be doubled. If the csa is doubled, the resistance will be halved.

Table 9.3 Resistivity values

Material	Resistivity (Ω m)
Silver	16.4×10^{-9}
Copper	17.5×10^{-9}
Aluminium	28.5×10^{-9}
Brass	75.0×10^{-9}
Iron	100.0×10^{-9}

Example 2

Calculate the resistance of 100 m of aluminium cable of 1.5 mm^2 cross-sectional area if the resistivity of aluminium is taken as $28.5 \times 10^{-9}\,\Omega\,\text{m}$.

$$R = \frac{\rho l}{a}(\Omega)$$

$$\therefore R = \frac{28.5 \times 10^{-9}\ \Omega\ \text{m} \times 100\ \text{m}}{1.5 \times 10^{-6}\ \text{m}^2} = 1.9\ \Omega$$

The above examples show that the resistance of an aluminium cable is some 60% greater than a copper conductor of the same length and cross-section. Therefore, if an aluminium cable is to replace a copper cable, the conductor size must be increased to carry the rated current as given by the tables in Appendix 4 of the IEE Regulations and Appendix 6 of the On Site Guide.

The other factor which affects the resistance of a material is the temperature, and we will consider this later.

Try this

Resistance

- Take two 100 m lengths of singles cable (2 coils)
- Measure the resistance of 100 m of cable (1 coil)
- Value _____ Ω
- Join the two lengths together (200 m) and again measure the resistance
- Value _____ Ω
- Does this experiment prove resistance is proportional to length?
- If the resistance is doubled, it is proved (QED)! (QED, *quod erat demonstradum*) is the Latin for 'which was to be demonstrated'.)

Definition

Mechanics is the scientific study of 'machines', where a machine is defined as a device which transmits motion or force from one place to another.

Basic mechanics and machines

Mechanics is the scientific study of 'machines', where a machine is defined as a device which transmits motion or force from one place to another. An engine is one particular type of machine, an energy-transforming machine, converting fuel energy into a more directly useful form of work.

Most modern machines can be traced back to the five basic machines described by the Greek inventor Hero of Alexandria who lived about the time of Christ. The machines described by him were the wedge, the screw, the wheel and axle, the pulley and the lever. Originally they were used for simple purposes, to raise water and to move objects which man alone could not lift, but today their principles are of fundamental importance to our scientific understanding of mechanics. Let us now consider some fundamental mechanical principles and calculations.

Definition

Mass is a measure of the amount of material in a substance, such as metal, plastic, wood, brick or tissue, which is collectively known as a body. The mass of a body remains constant and can easily be found by comparing it on a set of balance scales with a set of standard masses. The SI unit of mass is the kilogram (kg).

Mass

Mass is a measure of the amount of material in a substance, such as metal, plastic, wood, brick or tissue, which is collectively known as a body. The mass of a

body remains constant and can easily be found by comparing it on a set of balance scales with a set of standard masses. The SI unit of mass is the kilogram (kg).

Weight

Weight is a measure of the force which a body exerts on anything which supports it. Normally it exerts this force because it is being attracted towards the Earth by the force of gravity.

For scientific purposes the weight of a body is *not* constant, because gravitational force varies from the Equator to the Poles; in space a body would be 'weightless' but here on Earth under the influence of gravity a 1 kg mass would have a weight of approximately 9.81 N (see also the definition of 'force').

Definition

Weight is a measure of the force which a body exerts on anything which supports it. Normally it exerts this force because it is being attracted towards the Earth by the force of gravity.

Speed

The feeling of speed is something with which we are all familiar. If we travel in a motor vehicle we know that an increase in speed would, excluding accidents, allow us to arrive at our destination more quickly. Therefore, **speed** is concerned with distance travelled and time taken. Suppose we were to travel a distance of 30 miles in 1 h; our speed would be an average of 30 miles/h:

$$\text{Speed} = \frac{\text{Distance (m)}}{\text{Time (s)}}$$

Definition

Speed is concerned with distance travelled and time taken.

Velocity

In everyday conversation we often use the word velocity to mean the same as speed, and indeed the units are the same. However, for scientific purposes this is not acceptable since velocity is also concerned with direction. **Velocity** is speed in a given direction. For example, the speed of an aircraft might be 200 miles/h, but its velocity would be 200 miles/h in, say, a westerly direction. Speed is a scalar quantity, while velocity is a vector quantity.

$$\text{Velocity} = \frac{\text{Distance (m)}}{\text{Time (s)}}$$

Definition

Velocity. In everyday conversation we often use the word velocity to mean the same as speed, and indeed the units are the same. However, for scientific purposes this is not acceptable since velocity is also concerned with direction.

Acceleration

When an aircraft takes off, it starts from rest and increases its velocity until it can fly. This change in velocity is called its acceleration. By definition, **acceleration** is the rate of change in velocity with time.

$$\text{Acceleration} = \frac{\text{Velocity}}{\text{Time}} = (\text{m/s}^2)$$

Definition

By definition, *acceleration* is the rate of change in velocity with time.

Example

If an aircraft accelerates from a velocity of 15 m/s to 35 m/s in 4 s, calculate its average acceleration.

Average velocity = 35 m/s – 15 m/s = 20 m/s

$$\text{Average acceleration} = \frac{\text{Velocity}}{\text{Time}} = \frac{20}{4} = 5\ \text{m/s}^2$$

Thus, the average acceleration is 5 m/s^2.

Force

Definition

Force The presence of a force can only be detected by its effect on a body. A force may cause a stationary object to move or bring a moving body to rest.

The presence of a force can only be detected by its effect on a body. A **force** may cause a stationary object to move or bring a moving body to rest. For example, a number of people pushing a broken-down motor car exert a force which propels it forward, but applying the motor car brakes applies a force on the brake drums which slows down or stops the vehicle. Gravitational force causes objects to fall to the ground. The apple fell from the tree on to Isaac Newton's head as a result of gravitational force. The standard rate of acceleration due to gravity is accepted as 9.81 m/s^2. Therefore, an apple weighing 1 kg will exert a force of 9.81 N since

$$\text{Force} = \text{Mass} \times \text{Acceleration (N)}$$

The SI unit of force is the newton, symbol N, to commemorate the great English scientist Sir Isaac Newton (1642–1727).

Definition

- 'Inertial force' is the force required to get things moving, to change direction or stop, like the motor car discussed above.
- 'Cohesive or adhesive force' is the force required to hold things together.
- 'Tensile force' is the force pulling things apart.
- 'Compressive force' is the force pushing things together.
- 'Friction force' is the force which resists or prevents the movement of two surfaces in contact.
- 'Shearing force' is the force which moves one face of a material over another.
- 'Centripetal force' is the force acting towards the centre when a mass attached to a string is rotated in a circular path.
- 'Centrifugal force' is the force acting away from the centre, the opposite to centripetal force.
- 'Gravitational force' is the force acting towards the centre of the earth due to the effect of gravity.
- 'Magnetic force' is the force created by a magnetic field.
- 'Electrical force' is the force created by an electrical field.

Example

A 50 kg bag of cement falls from a forklift truck while being lifted to a storage shelf. Determine the force with which the bag will strike the ground:

$$\text{Force} = \text{Mass} \times \text{Acceleration (N)}$$

$$\text{Force} = 50\text{ kg} \times 9.81\text{ m/s}^2 = 490.5\text{ N}$$

A force can manifest itself in many different ways. Let us consider a few examples:

- 'Inertial force' is the force required to get things moving, to change direction or stop, like the motor car discussed above.
- 'Cohesive or adhesive force' is the force required to hold things together.
- 'Tensile force' is the force pulling things apart.
- 'Compressive force' is the force pushing things together.
- 'Friction force' is the force which resists or prevents the movement of two surfaces in contact.
- 'Shearing force' is the force which moves one face of a material over another.
- 'Centripetal force' is the force acting towards the centre when a mass attached to a string is rotated in a circular path.
- 'Centrifugal force' is the force acting away from the centre, the opposite to centripetal force.
- 'Gravitational force' is the force acting towards the centre of the Earth due to the effect of gravity.
- 'Magnetic force' is the force created by a magnetic field.
- 'Electrical force' is the force created by an electrical field.

Pressure or stress

To move a broken-down motor car I might exert a force on the back of the car to propel it forward. My hands would apply a pressure on the body panel at the

point of contact with the car. **Pressure** or **stress** is a measure of the force per unit area.

$$\text{Pressure or stress} = \frac{\text{Force}}{\text{Area}} (\text{N/m}^2)$$

Definition

Pressure or *stress* is a measure of the force per unit area.

Example 1

A young woman of mass 60 kg puts all her weight on to the heel of one shoe which has an area of 1 cm^2. Calculate the pressure exerted by the shoe on the floor (assuming the acceleration due to gravity to be 9.81 m/s^2).

$$\text{Pressure} = \frac{\text{Force}}{\text{Area}} (\text{N/m}^2)$$

$$\text{Pressure} = \frac{60\ \text{kg} \times 9.81\ \text{m/s}^2}{1 \times 10^{-4}\ \text{m}^2} = 5886\ \text{kN/m}^2$$

Example 2

A small circus elephant of mass 1 tonne (1000 kg) puts all its weight on to one foot which has a surface area of 400 cm^2. Calculate the pressure exerted by the elephant's foot on the floor, assuming the acceleration due to gravity to be 9.81 m/s^2.

$$\text{Pressure} = \frac{\text{Force}}{\text{Area}} (\text{N/m}^2)$$

$$\text{Pressure} = \frac{1000\ \text{kg} \times 9.81\ \text{m/s}^2}{400 \times 10^{-4}\ \text{m}^2} = 245.3\ \text{kN/m}^2$$

These two examples show that the young woman exerts 24 times more pressure on the ground than the elephant. This is because her mass exerts a force over a much smaller area than the elephant's foot and is the reason why many wooden dance floors are damaged by high-heeled shoes.

Work done

Suppose a broken-down motor car was to be pushed along a road. Work would be done on the car by applying the force necessary to move it along the road. Heavy breathing and perspiration would be evidence of the work done.

By definition **work done** is dependent upon the force applied times the distance moved in the direction of the force.

$$\text{Work done} = \text{Force} \times \text{Distance moved in the direction of the force (J)}$$

Definition

By definition, *work done* is dependent upon the force applied times the distance moved in the direction of the force.

The SI unit of work done is the newton metre or joule (symbol J). The joule is the preferred unit and it commemorates an English physicist, James Prescott Joule (1818–1889).

Example

A building hoist lifts ten 50 kg bags of cement through a vertical distance of 30 m to the top of a high-rise building. Calculate the work done by the hoist, assuming the acceleration due to gravity to be 9.81 m/s^2.

$$\text{Work done} = \text{Force} \times \text{Distance moved (J)}$$
$$\text{but force} = \text{Mass} \times \text{Acceleration (N)}$$
$$\therefore \text{Work done} = \text{Mass} \times \text{Acceleration} \times \text{Distance moved (J)}$$
$$\text{Work done} = 10 \times 50\,\text{kg} \times 9.81\,\text{m/s}^2 \times 30\,\text{m}$$
$$\text{Work done} = 147.15\,\text{kJ}$$

Power

Definition

By definition, *power* is the rate of doing work.

If one motor car can cover the distance between two points more quickly than another car, we say that the faster car is more powerful. It can do a given amount of work more quickly. By definition, **power** is the rate of doing work.

$$\text{Power} = \frac{\text{Work done}}{\text{Time taken}}\,(\text{W})$$

The SI unit of power, both electrical and mechanical, is the watt (symbol W). This commemorates the name of James Watt (1736–1819), the inventor of the steam engine.

Example 1

A building hoist lifts ten 50 kg bags of cement to the top of a 30 m high building. Calculate the rating (power) of the motor to perform this task in 60 s if the acceleration due to gravity is taken as 9.81 m/s^2.

$$\text{Power} = \frac{\text{Work done}}{\text{Time taken}}\,(\text{W})$$
$$\text{but work done} = \text{Force} \times \text{Distance moved (J)}$$
$$\text{and force} = \text{Mass} \times \text{Acceleration (N)}$$

By substitution,

$$\text{Power} = \frac{\text{Mass} \times \text{Acceleration} \times \text{Distance moved}}{\text{Time taken}}\,(\text{W})$$

$$\text{Power} = \frac{10 \times 50\,\text{kg} \times 9.81\,\text{m/s}^2 \times 30\,\text{m}}{60\,\text{s}}$$

$$\text{Power} = 2452.5\,\text{W}$$

The rating of the building hoist motor will be 2.45 kW.

Example 2

A hydroelectric power station pump motor working continuously during a 7 h period raises 856 tonnes of water through a vertical distance of 60 m. Determine the rating (power) of the motor, assuming the acceleration due to gravity is 9.81 m/s^2.

From Example 1,

$$\text{Power} = \frac{\text{Mass} \times \text{Acceleration} \times \text{Distance moved}}{\text{Time taken}} \text{(W)}$$

$$\text{Power} = \frac{856 \times 1000\,\text{kg} \times 9.81\,\text{m/s}^2 \times 60\,\text{m}}{7 \times 60 \times 60\,\text{s}}$$

$$\text{Power} = 20{,}000\,\text{W}$$

The rating of the pump motor is 20 kW.

Example 3

An electric hoist motor raises a load of 500 kg at a velocity of 2 m/s. Calculate the rating (power) of the motor if the acceleration due to gravity is 9.81 m/s^2.

$$\text{Power} = \frac{\text{Mass} \times \text{Acceleration} \times \text{Distance moved}}{\text{Time taken}} \text{(W)}$$

$$\text{but Velocity} = \frac{\text{Distance}}{\text{Time}} \text{(m/s)}$$

$$\therefore \text{Power} = \text{Mass} \times \text{Acceleration} \times \text{Velocity}$$
$$\text{Power} = 500\,\text{kg} \times 9.81\,\text{m/s}^2 \times 2\,\text{m/s}$$
$$\text{Power} = 9810\,\text{W}.$$

The rating of the hoist motor is 9.81 kW.

Levers and turning force

A **lever** allows a heavy load to be lifted or moved by a small effort. Every time we open a door, turn on a tap or tighten a nut with a spanner, we exert a lever-action turning force. A lever is any rigid body which pivots or rotates about a fixed axis or fulcrum. The simplest form of lever is the crowbar, which is useful because it enables a person to lift a load at one end which is greater than the effort applied through his or her arm muscles at the other end. In this way the crowbar is said to provide a 'mechanical advantage'. A washbasin tap and a spanner both provide a mechanical advantage through the simple lever action. The mechanical advantage of a simple lever is dependent upon the length of lever on either side of the fulcrum. Applying the principle of turning forces to a lever, we obtain the formula:

$$\text{Load force} \times \text{Distance from fulcrum} = \text{Effort force} \times \text{Distance from fulcrum}$$

Definition

A *lever* allows a heavy load to be lifted or moved by a small effort.

Definition

A *lever* is any rigid body which pivots or rotates about a fixed axis or fulcrum.

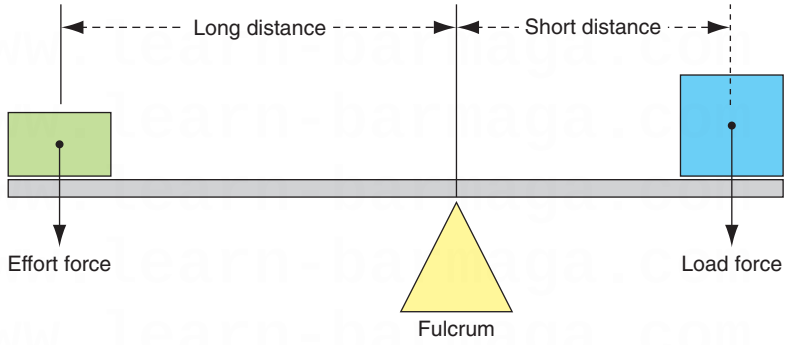

Figure 9.2 Turning forces of a simple lever.

This formula can perhaps better be understood by referring to Fig. 9.2. A small effort at a long distance from the fulcrum can balance a large load at a short distance from the fulcrum. Thus a 'turning force' or 'turning moment' depends upon the distance from the fulcrum and the magnitude of the force.

Example

Calculate the effort required to raise a load of 500 kg when the effort is applied at a distance of five times the load distance from the fulcrum (assume the acceleration due to gravity to be 10 m/s^2).

$$\text{Load force} = \text{Mass} \times \text{Acceleration (N)}$$

$$\text{Load force} = 500\text{ kg} \times 10\text{ m/s}^2 = 5000\text{ N}$$

$$\text{Load force} \times \text{Distance from fulcrum} = \text{Effort force} \times \text{Distance from fulcrum}$$

$$5000\text{ N} \times 1\text{ m} = \text{Effort force} \times 5\text{ m}$$

$$\therefore \text{Effort force} = \frac{5000\text{ N} \times 1\text{ m}}{5\text{ m}} = 1000\text{ N}$$

Thus an effort force of 1000 N can overcome a load force of 5000 N using the mechanical advantage of this simple lever.

Definition

By definition, a *machine* is an assembly of parts, some fixed, others movable, by which motion and force are transmitted. With the aid of a machine we are able to magnify the effort exerted at the input and lift or move large loads at the output.

Simple machines

Our physical abilities in the field of lifting and moving heavy objects are limited. However, over the centuries we have used our superior intelligence to design tools, mechanisms and machines which have overcome this physical inadequacy. This concept is shown in Fig. 9.3.

By definition, a **machine** is an assembly of parts, some fixed, others movable, by which motion and force are transmitted. With the aid of a machine we are able to magnify the effort exerted at the input and lift or move large loads at the output.

Efficiency of any machine

In any machine the power available at the output is less than that which is put in because losses occur in the machine. The losses may result from friction in the bearings, wind resistance to moving parts, heat, noise or vibration.

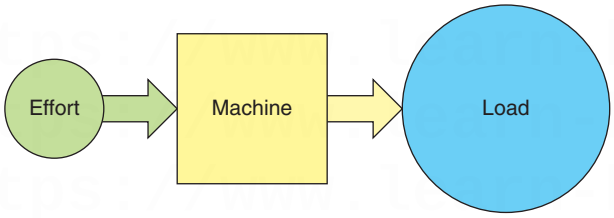

Figure 9.3 Simple machine concept.

The ratio of the output power to the input power is known as the **efficiency** of the machine. The symbol for efficiency is the Greek letter 'eta' (η). In general,

$$\eta = \frac{\text{Power output}}{\text{Power input}}$$

Since efficiency is usually expressed as a percentage we modify the general formula as follows:

$$\eta = \frac{\text{Power output}}{\text{Power input}} \times 100$$

Definition

The ratio of the output power to the input power is known as the *efficiency* of the machine. The symbol for efficiency is the Greek letter 'eta' (η). In general,

$$\eta = \frac{\text{Power output}}{\text{Power input}}$$

Example

A transformer feeds the 9.81 kW motor driving the mechanical hoist of the previous example. The input power to the transformer was found to be 10.9 kW. Find the efficiency of the transformer.

$$\eta = \frac{\text{Power output}}{\text{Power input}} \times 100$$

$$\eta = \frac{9.81\,\text{kW}}{10.9\,\text{kW}} \times 100 = 90\%$$

Thus the transformer is 90% efficient. Note that efficiency has no units, but is simply expressed as a percentage.

Electrical machines

Electrical machines are energy converters. If the machine input is mechanical energy and the output electrical energy then that machine is a generator, as shown in Fig. 9.4(a). Alternatively, if the machine input is electrical energy and the output mechanical energy then the machine is a motor, as shown in Fig. 9.4(b).

An electrical machine may be used as a motor or a generator, although in practice the machine will operate more efficiently when operated in the mode for which it was designed.

Simple a.c. generator or alternator

If a simple loop of wire is rotated between the poles of a permanent magnet, as shown in Fig. 9.5, the loop of wire will cut the lines of magnetic flux between

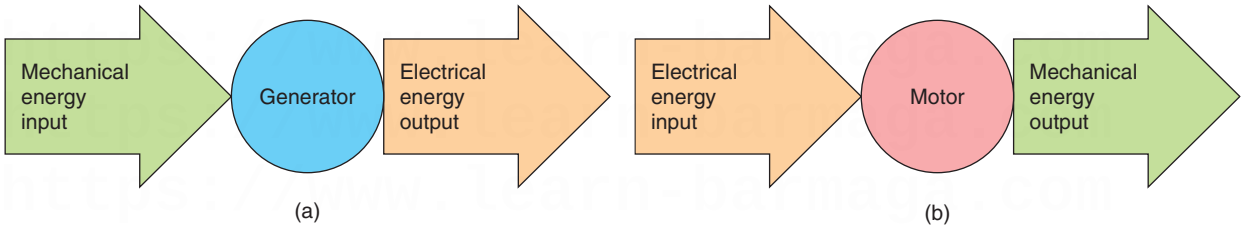

Figure 9.4 Electrical machines as energy converters.

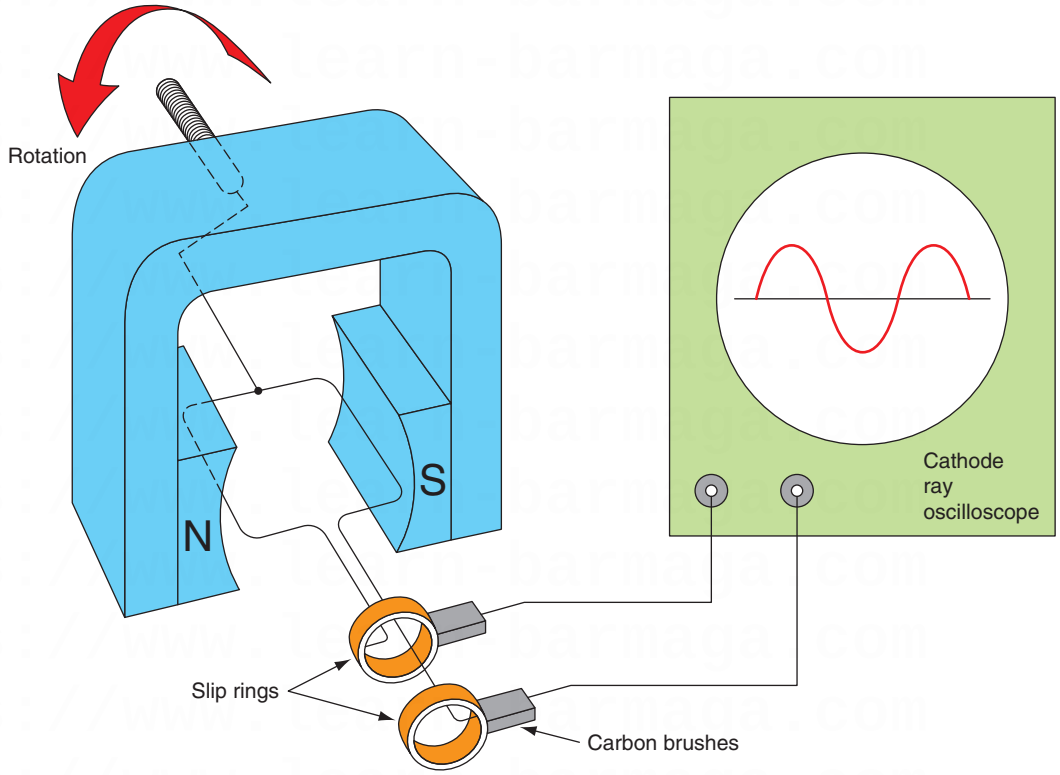

Figure 9.5 Simple a.c. generator or alternator.

Definition

Faraday's law which states that *when a conductor cuts or is cut by a magnetic field, an e.m.f. is induced in that conductor*.

the north and south poles. This flux cutting will induce an e.m.f. in the wire by **Faraday's law** which states that *when a conductor cuts or is cut by a magnetic field, an e.m.f. is induced in that conductor*. If the generated e.m.f. is collected by carbon brushes at the slip rings and displayed on the screen of a cathode ray oscilloscope, the waveform will be seen to be approximately sinusoidal. Alternately changing, first positive and then negative, then positive again, gives an alternating output.

Simple d.c. generator or dynamo

If the slip rings of Fig. 9.5 are replaced by a single split ring, called a commutator, the generated e.m.f. will be seen to be in one direction, as shown in Fig. 9.6. The action of the commutator is to reverse the generated e.m.f. every half-cycle, rather like an automatic change-over switch. However, this simple arrangement produces a very bumpy d.c. output. In a practical machine, the commutator would contain many segments and many windings to produce a smoother d.c. output similar to the unidirectional battery supply shown in Fig. 9.7.

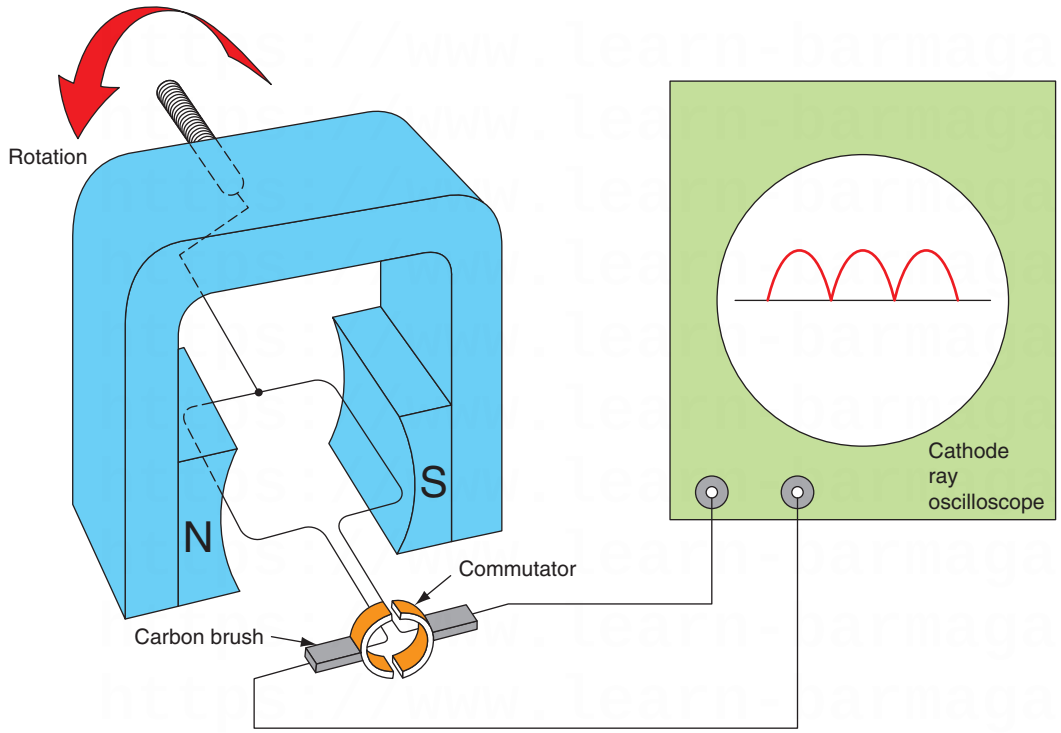

Figure 9.6 Simple d.c. generator or dynamo.

Alternating current theory

The supply which we obtain from a car battery is a unidirectional or d.c. supply, whereas the mains electricity supply is alternating or a.c. (see Fig. 9.7).

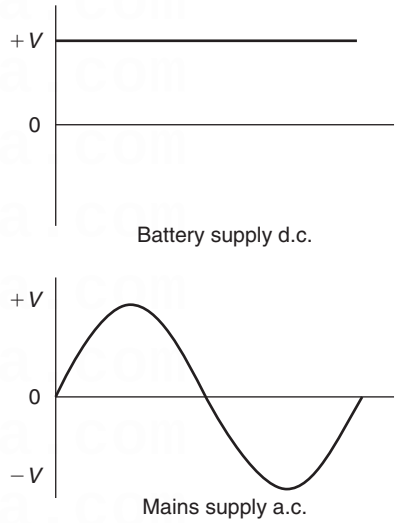

Figure 9.7 Unidirectional and alternating supply.

One of the reasons for using alternating supplies for the electricity mains supply is because we can very easily change the voltage levels by using a transformer which will only work on an a.c. supply.

The generated alternating supply at the power station is transformed up to 132,000 V, or more, for efficient transmission along the national grid conductors.

Most electrical equipment makes use of alternating current supplies, and for this reason knowledge of alternating waveforms is necessary for all practising electricians.

When a coil of wire is rotated inside a magnetic field as shown in Fig. 9.5, a voltage is induced in the coil. The induced voltage follows a mathematical law known as the sinusoidal law and, therefore, we can say that a sine wave has been generated. Such a waveform has the characteristics displayed in Fig. 9.8.

In the United Kingdom we generate electricity at a frequency of 50 Hz and the time taken to complete each cycle is given by

$$T = \frac{1}{f}$$

$$\therefore T = \frac{1}{50\,\text{Hz}} = 0.02\,\text{s}$$

An alternating waveform is constantly changing from zero to a maximum, first in one direction, then in the opposite direction, and so the instantaneous values of the generated voltage are always changing. A useful description of the electrical

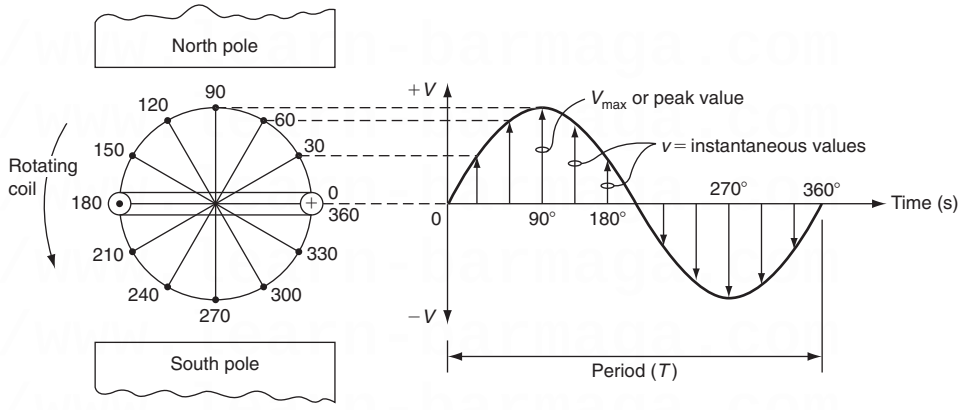

Figure 9.8 Characteristics of a sine wave.

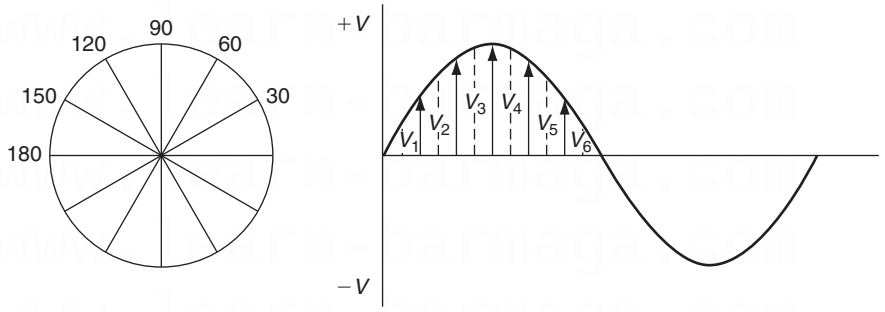

Figure 9.9 Sinusoidal waveform showing instantaneous values of voltage.

effects of an a.c. waveform can be given by the maximum, average and r.m.s. values of the waveform.

The maximum or peak value is the greatest instantaneous value reached by the generated waveform. Cable and equipment insulation levels must be equal to or greater than this value.

The average value is the average over one half-cycle of the instantaneous values as they change from zero to a maximum and can be found from the following formula applied to the sinusoidal waveform shown in Fig. 9.9.

$$V_{av} = \frac{V_1 + V_2 + V_3 + V_4 + V_5 + V_6}{6} = 0.637V_{max}$$

For any sinusoidal waveform the average value is equal to 0.637 of the maximum value.

The r.m.s. value is the square root of the mean of the individual squared values and is the value of an a.c. voltage which produces the same heating effect as a d.c. voltage. The value can be found from the following formula applied to the sinusoidal waveform shown in Fig. 9.9.

$$V_{r.m.s.} = \sqrt{\frac{V_1^2 + V_2^2 + V_3^2 + V_4^2 + V_5^2 + V_6^2}{6}}$$
$$= 0.7071V_{max}$$

For any sinusoidal waveform the r.m.s. value is equal to 0.7071 of the maximum value.

Example

The sinusoidal waveform applied to a particular circuit has a maximum value of 325.3 V. Calculate the average and r.m.s. value of the waveform.

$$\text{Average value } V_{av} = 0.637 \times V_{max}$$
$$\therefore V_{av} = 0.637 \times 325.3 = 207.2 \text{ V}$$
$$\text{r.m.s. value } V_{r.m.s.} = 0.7071 \times V_{max}$$
$$V_{r.m.s.} = 0.7071 \times 325.3 = 230 \text{ V}$$

When we say that the main supply to a domestic property is 230 V, we really mean 230 $V_{r.m.s}$. Such a waveform has an average value of about 207.2 V and a maximum value of almost 325.3 V but because the r.m.s. value gives the d.c. equivalent value we almost always give the r.m.s. value without identifying it as such.

Properties of conductors and insulators

In Fig. 9.1 earlier in this chapter we looked at the atomic structure of materials. All materials are made up of atoms and electrons. What makes them different materials is the way in which the atoms and electrons are arranged and how strongly the electrons are attracted to the atoms.

A **conductor** is a material, usually a metal, in which the electrons are loosely bound to the central nucleus. These electrons can easily become 'free electrons' which allows heat and electricity to pass easily through the material.

An **insulator** is a material, usually a non-metal, in which the electrons are very firmly bound to the nucleus and, therefore, will not allow heat or electricity to pass through it.

Let us now define the terms and properties of some of the materials used in the electrotechnical industry.

Ferrous A word used to describe all metals in which the main constituent is iron. The word 'ferrous' comes from the Latin word *ferrum* meaning iron. Ferrous metals have magnetic properties. Cast iron, wrought iron and steel are all ferrous metals.

Non-ferrous Metals which *do not* contain iron are called non-ferrous. They are non-magnetic and resist rusting. Copper, aluminium, tin, lead, zinc and brass are examples of non-ferrous metals.

Alloy An alloy is a mixture of two or more metals. Brass is an alloy of copper and zinc, usually in the ratio 70–30% or 60–40%.

Corrosion The destruction of a metal by chemical action. Most corrosion takes place when a metal is in contact with moisture (see also mild steel and zinc).

Thermoplastic polymers These may be repeatedly warmed and cooled without appreciable changes occurring in the properties of the material. They are good insulators, but give off toxic fumes when burned. They have a flexible quality when operated up to a maximum temperature of 70°C but should not be flexed when the air temperature is near 0°C, otherwise they may crack. Polyvinylchloride (PVC) used for cable insulation is a thermoplastic polymer.

Definitions

A *conductor* is a material, usually a metal, in which the electrons are loosely bound to the central nucleus. These electrons can easily become 'free electrons' which allows heat and electricity to pass easily through the material.

An *insulator* is a material, usually a non-metal, in which the electrons are very firmly bound to the nucleus and, therefore, will not allow heat or electricity to pass through it.

Ferrous A word used to describe all metals in which the main constituent is iron.

Non-ferrous Metals which *do not* contain iron are called non-ferrous.

Alloy An alloy is a mixture of two or more metals.

Corrosion The destruction of a metal by chemical action.

Thermoplastic polymers These may be repeatedly warmed and cooled without appreciable changes occurring in the properties of the material.

Polyvinylchloride (PVC) used for cable insulation is a thermoplastic polymer.

Definitions

Thermosetting polymers Once heated and formed, products made from thermosetting polymers are fixed rigidly. Plug tops, socket outlets and switch plates are made from this material.

Rubber is a tough elastic substance made from the sap of tropical plants.

Synthetic rubber is manufactured, as opposed to being produced naturally.

Silicon rubber Introducing organic compounds into synthetic rubber produces a good insulating material such as FP 200 cables.

Magnesium oxide The conductors of mineral insulated metal sheathed (MICC) cables are insulated with compressed magnesium oxide.

Thermosetting polymers Once heated and formed, products made from thermosetting polymers are fixed rigidly. Plug tops, socket outlets and switch plates are made from this material.

Rubber is a tough elastic substance made from the sap of tropical plants. It is a good insulator, but degrades and becomes brittle when exposed to sunlight.

Synthetic rubber is manufactured, as opposed to being produced naturally. Synthetic or artificial rubber is carefully manufactured to have all the good qualities of natural rubber – flexibility, good insulation and suitability for use over a wide range of temperatures.

Silicon rubber Introducing organic compounds into synthetic rubber produces a good insulating material which is flexible over a wide range of temperatures and which retains its insulating properties even when burned. These properties make it ideal for cables used in fire alarm installations such as FP200 cables.

Magnesium oxide The conductors of mineral insulated metal sheathed (MICC) cables are insulated with compressed magnesium oxide, a white chalk-like substance which is heat-resistant and a good insulator and lasts for many years. The magnesium oxide insulation, copper conductors and sheath, often additionally manufactured with various external sheaths to provide further protection from corrosion and weather, produce a cable designed for long-life and high-temperature installations. However, the magnesium oxide is very hygroscopic, which means that it attracts moisture and, therefore, the cable must be terminated with a special moisture-excluding seal, as shown in Fig. 6.15.

Copper

Copper is extracted from an ore which is mined in South Africa, North America, Australia and Chile. For electrical purposes it is refined to about 98.8% pure copper, the impurities being extracted from the ore by smelting and electrolysis. It is a very good conductor, is non-magnetic and offers considerable resistance to atmospheric corrosion. Copper toughens with work, but may be annealed, or softened, by heating to dull red before quenching.

Copper forms the largest portion of the alloy brass, and is used in the manufacture of electrical cables, domestic heating systems, refrigerator tubes and vehicle radiators. An attractive soft reddish brown metal, copper is easily worked and is also used to manufacture decorative articles and jewellery.

Aluminium

Aluminium is a grey-white metal obtained from the mineral bauxite which is found in the United States, Germany and the Russian Federation. It is a very good conductor, is non-magnetic, offers very good resistance to atmospheric corrosion and is notable for its extreme softness and lightness. It is used in the manufacture of power cables. The overhead cables of the national grid are made of an aluminium conductor reinforced by a core of steel. Copper conductors would be too heavy to support themselves between the pylons. Lightness and resistance to corrosion make aluminium an ideal metal for the manufacture of cooking pots and food containers.

Aluminium alloys retain the corrosion resistance properties of pure aluminium with an increase in strength. The alloys are cast into cylinder heads and gearboxes for motorcars, and switch-boxes and luminaires for electrical installations. Special processes and fluxes have now been developed which allow aluminium to be welded and soldered.

Try this

Materials

List 5 ‘good insulator’ materials being used at your place of work.

Brass

Brass is a non-ferrous alloy of copper and zinc which is easily cast. Because it is harder than copper or aluminium it is easily machined. It is a good conductor and is highly resistant to corrosion. For these reasons it is often used in the electrical and plumbing trades. Taps, valves, pipes, electrical terminals, plug top pins and terminal glands for steel wire armour (SWA) and MI cables are some of the many applications.

Brass is an attractive yellow metal which is also used for decorative household articles and jewellery. The combined properties of being an attractive metal which is highly resistant to corrosion make it a popular metal for ships’ furnishings.

Cast steel

Cast steel is also called tool steel or high-carbon steel. It is an alloy of iron and carbon which is melted in airtight crucibles and then poured into moulds to form ingots. These ingots are then rolled or pressed into various shapes from which the finished products are made. Cast steel can be hardened and tempered and is therefore ideal for manufacturing tools. Hammer heads, pliers, wire cutters, chisels, files and many machine parts are also made from cast steel.

Mild steel

Mild steel is also an alloy of iron and carbon but contains much less carbon than cast steel. It can be filed, drilled or sawn quite easily and may be bent when hot or cold, but repeated cold bending may cause it to fracture. In moist conditions corrosion takes place rapidly unless the metal is protected. Mild steel is the most widely used metal in the world, having considerable strength and rigidity without being brittle. Ships, bridges, girders, motorcar bodies, bicycles, nails, screws, conduit, trunking, tray and SWA are all made of mild steel.

Try this

Materials

List 5 ‘good conductor’ materials being used at your place of work.

Zinc

Zinc is a non-ferrous metal which is used mainly to protect steel against corrosion and in making the alloy brass. Mild steel coated with zinc is sometimes called *galvanized steel*, and this coating considerably improves steel’s resistance to corrosion. Conduit, trunking, tray, SWA, outside luminaires and electricity pylons are made of galvanized steel.

Resistors in series and parallel

In an electrical circuit resistors may be connected in series, in parallel, or in various combinations of series and parallel connections.

Series-connected resistors

In any series circuit a current I will flow through all parts of the circuit as a result of the potential difference supplied by a battery V_T. Therefore, we say that in a series circuit the current is common throughout that circuit.

When the current flows through each resistor in the circuit, R_1, R_2 and R_3 for example in Fig. 9.10, there will be a voltage drop across that resistor whose value will be determined by the values of I and R, since from Ohm's law $V = I \times R$. The sum of the individual voltage drops, V_1, V_2 and V_3 for example in Fig. 9.10, will be equal to the total voltage V_T.

We can summarize these statements as follows. For any series circuit, I is common throughout the circuit and

$$V_T = V_1 + V_2 + V_3 \qquad \text{(Equation 1)}$$

Let us call the total circuit resistance R_T. From Ohm's law we know that $V = I \times R$ and therefore

$$\begin{aligned} &\text{Total voltage } V_T = I \times R_T \\ &\text{Voltage drop across } R_1 \text{ is } V_1 = I \times R_1 \\ &\text{Voltage drop across } R_2 \text{ is } V_2 = I \times R_2 \\ &\text{Voltage drop across } R_3 \text{ is } V_3 = I \times R_3 \end{aligned} \qquad \text{(Equation 2)}$$

We are looking for an expression for the total resistance in any series circuit and, if we substitute equation (2) into equation (1) we have:

$$\begin{aligned} V_T &= V_1 + V_2 + V_3 \\ \therefore I \times R_T &= I \times R_1 + I \times R_2 + I \times R_3 \end{aligned}$$

Now, since I is common to all terms in the equation, we can divide both sides of the equation by I. This will cancel out I to leave us with an expression for the circuit resistance:

$$R_T = R_1 + R_2 + R_3$$

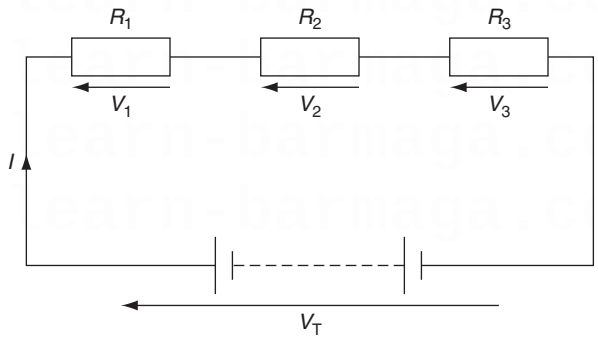

Figure 9.10 A series circuit.

Note that the derivation of this formula is given for information only. Craft students need only state the expression $R_T = R_1 + R_2 + R_3$ for series connections.

Parallel-connected resistors

In any parallel circuit, as shown in Fig. 9.11, the same voltage acts across all branches of the circuit. The total current will divide when it reaches a resistor junction, part of it flowing in each resistor. The sum of the individual currents, I_1, I_2 and I_3 for example in Fig. 9.11, will be equal to the total current I_T.

We can summarize these statements as follows. For any parallel circuit, V is common to all branches of the circuit and

$$I_T = I_1 + I_2 + I_3 \qquad \text{(Equation 3)}$$

Let us call the total resistance R_T.

From Ohm's law we know, that $I = \frac{V}{R}$, and therefore

$$\text{the total current } I_T = \frac{V}{R_T}$$

$$\text{the current through } R_1 \text{ is } I_1 = \frac{V}{R_1}$$

$$\text{the current through } R_2 \text{ is } I_2 = \frac{V}{R_2}$$

$$\text{the current through } R_3 \text{ is } I_3 = \frac{V}{R_3} \qquad \text{(Equation 4)}$$

We are looking for an expression for the equivalent resistance R_T in any *parallel* circuit and, if we substitute equations (4) into equation (3) we have:

$$I_T = I_1 + I_2 + I_3$$

$$\therefore \frac{V}{R_T} = \frac{V}{R_1} + \frac{V}{R_2} + \frac{V}{R_3}$$

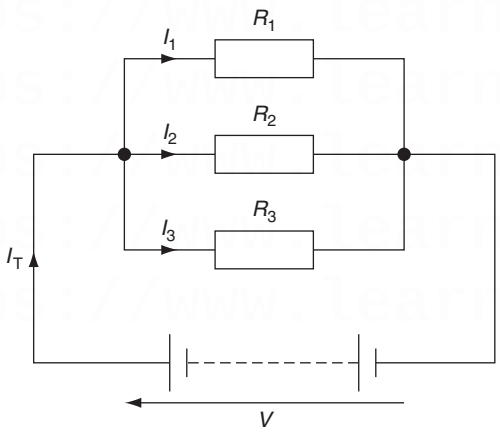

Figure 9.11 A parallel circuit.

Key fact

Resistors
In a series circuit, total resistance $R_T = R_1 + R_2 + R_3$ ohms.

Key fact

Resistors

In a parallel circuit, total resistance can be found from

$$\frac{1}{R_T} = \frac{1}{R_1} + \frac{1}{R_2} + \frac{1}{R_3}$$

Now, since V is common to all terms in the equation, we can divide both sides by V, leaving us with an expression for the circuit resistance:

$$\frac{1}{R_T} = \frac{1}{R_1} + \frac{1}{R_2} + \frac{1}{R_3}$$

Note that the derivation of this formula is given for information only. Craft students need only state the expression $1/R_T = 1/R_1 + 1/R_2 + 1/R_3$ for parallel connections.

Example 1

Three 6 Ω resistors are connected (a) in series (see Fig. 9.12), and (b) in parallel (see Fig. 9.13), across a 12 V battery. For each method of connection, find the total resistance and the values of all currents and voltages.

For any series connection

$$R_T = R_1 + R_2 + R_3$$
$$\therefore R_T = 6\,\Omega + 6\,\Omega + 6\,\Omega = 18\,\Omega$$

Total current $I_T = \dfrac{V_T}{R_T}$

$$\therefore I_T = \frac{12\text{ V}}{18\,\Omega} = 0.67\text{ A}$$

The voltage drop across R_1 is

$$V_1 = I_T \times R_1$$
$$\therefore V_1 = 0.67\text{ A} \times 6\,\Omega = 4\text{ V}$$

The voltage drop across R_2 is

$$V_2 = I_T \times R_2$$
$$\therefore V_2 = 0.67\text{ A} \times 6\,\Omega = 4\text{ V}$$

The voltage drop across R_3 is

$$V_3 = I_T \times R_3$$
$$\therefore V_3 = 0.67\text{ A} \times 6\,\Omega = 4\text{ V}$$

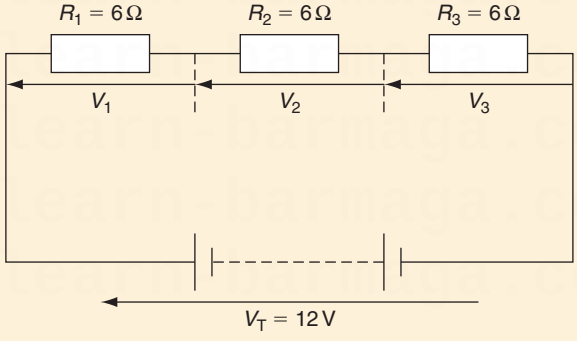

Figure 9.12 Resistors in series.

(*Continued*)

Example 1 (Continued)

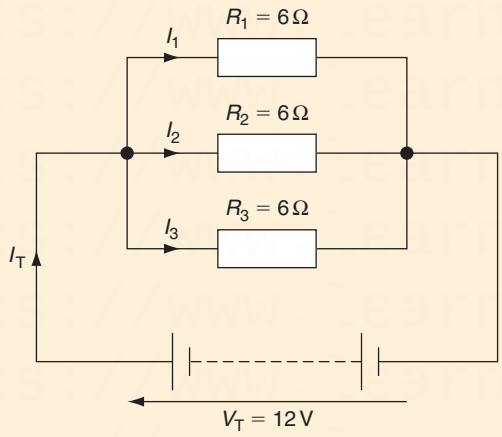

Figure 9.13 Resistors in parallel.

For any parallel connection

$$\frac{1}{R_T} = \frac{1}{R_1} + \frac{1}{R_2} + \frac{1}{R_3}$$

$$\therefore \frac{1}{R_T} = \frac{1}{6\,\Omega} + \frac{1}{6\,\Omega} + \frac{1}{6\,\Omega}$$

$$\frac{1}{R_T} = \frac{1+1+1}{6\,\Omega} = \frac{3}{6\,\Omega}$$

$$R_T = \frac{6\,\Omega}{3} = 2\,\Omega$$

Total current $I_T = \dfrac{V_T}{R_T}$

$$\therefore I_T = \frac{12\,V}{2\,\Omega} = 6\,A$$

The current flowing through R_1 is

$$I_1 = \frac{V_T}{R_1}$$

$$\therefore I_1 = \frac{12\,V}{6\,\Omega} = 2\,A$$

The current flowing through R_2 is

$$I_2 = \frac{V_T}{R_2}$$

$$\therefore I_2 = \frac{12\,V}{6\,\Omega} = 2\,A$$

The current flowing through R_3 is

$$I_3 = \frac{V_T}{R_3}$$

$$\therefore I_3 = \frac{12\,V}{6\,\Omega} = 2\,A$$

Series and parallel combinations

The most complex arrangement of series and parallel resistors can be simplified into a single equivalent resistor by combining the separate rules for series and parallel resistors.

Example 2

Resolve the circuit shown in Fig. 9.14 into a single resistor and calculate the potential difference across each resistor.

By inspection, the circuit contains a parallel group consisting of R_3, R_4 and R_5 and a series group consisting of R_1 and R_2 in series with the equivalent resistor for the parallel branch.

Consider the parallel group. We will label this group R_P. Then

$$\frac{1}{R_P} = \frac{1}{R_3} + \frac{1}{R_4} + \frac{1}{R_5}$$

$$\frac{1}{R_P} = \frac{1}{2\,\Omega} + \frac{1}{3\,\Omega} + \frac{1}{6\,\Omega}$$

$$\frac{1}{R_P} = \frac{3+2+1}{6\ \Omega} = \frac{6}{6\,\Omega}$$

$$R_P = \frac{6\,\Omega}{6} = 1\,\Omega$$

Figure 9.14 may now be represented by the more simple equivalent shown in Fig. 9.15.

Since all resistors are now in series,

$$R_T = R_1 + R_2 + R_P$$

$$\therefore R_T = 3\,\Omega + 6\,\Omega + 1\,\Omega = 10\,\Omega$$

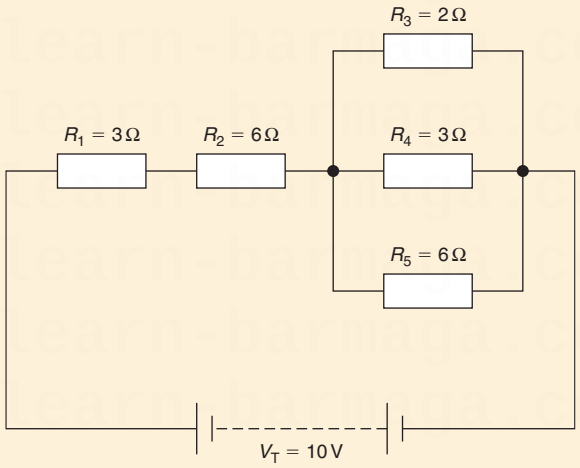

Figure 9.14 A series/parallel circuit.

(Continued)

Example 2 (Continued)

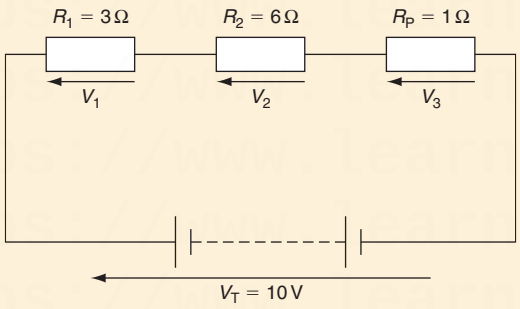

Figure 9.15 Equivalent series circuit.

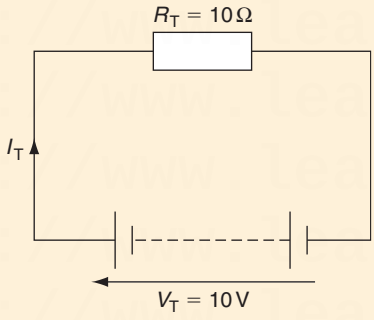

Figure 9.16 Single equivalent resistor for Fig. 9.14.

Thus, the circuit may be represented by a single equivalent resistor of value $10\,\Omega$ as shown in Fig. 9.16. The total current flowing in the circuit may be found by using Ohm's law:

$$I_T = \frac{V_T}{R_T} = \frac{10\text{ V}}{10\,\Omega} = 1\text{ A}$$

The potential differences across the individual resistors are

$$V_1 = I_T \times R_1 = 1\text{ A} \times 3\,\Omega = 3\text{ V}$$
$$V_2 = I_T \times R_2 = 1\text{ A} \times 6\,\Omega = 6\text{ V}$$
$$V_P = I_T \times R_P = 1\text{ A} \times 1\,\Omega = 1\text{ V}$$

Since the same voltage acts across all branches of a parallel circuit the same p.d. of 1 V will exist across each resistor in the parallel branch R_3, R_4 and R_5.

Example 3

Determine the total resistance and the current flowing through each resistor for the circuit shown in Fig. 9.17.

By inspection, it can be seen that R_1 and R_2 are connected in series while R_3 is connected in parallel across R_1 and R_2. The circuit may be more easily understood if we redraw it as in Fig. 9.18.

(*Continued*)

Example 3 (Continued)

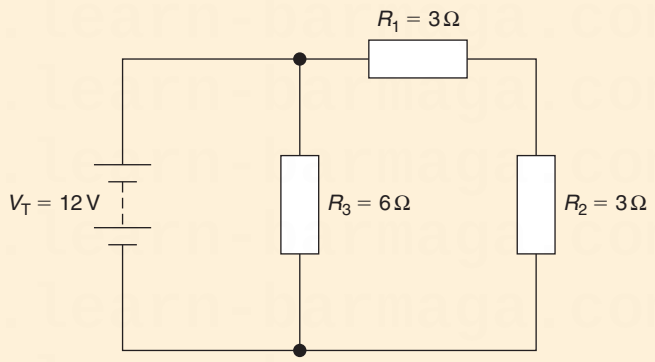

Figure 9.17 A series/parallel circuit for Example 3.

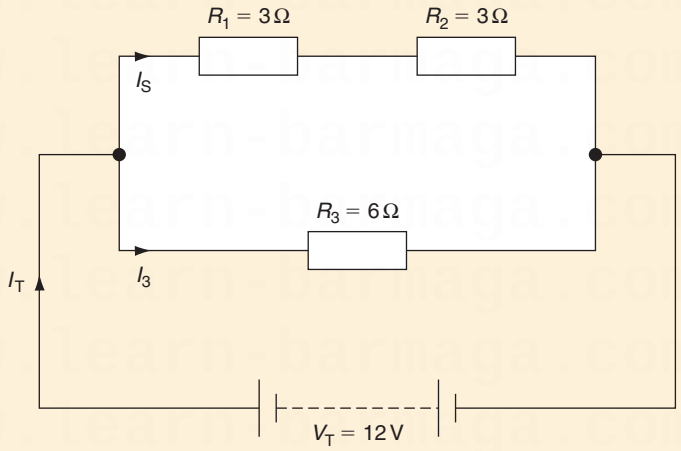

Figure 9.18 Equivalent circuit for Example 3.

For the series branch, the equivalent resistor can be found from

$$R_S = R_1 + R_2$$
$$\therefore R_S = 3\,\Omega + 3\,\Omega = 6\,\Omega$$

Figure 9.18 may now be represented by a more simple equivalent circuit, as in Fig. 9.19.

Since the resistors are now in parallel, the equivalent resistance may be found from

$$\frac{1}{R_T} = \frac{1}{R_S} + \frac{1}{R_3}$$

$$\therefore \frac{1}{R_T} = \frac{1}{6\,\Omega} + \frac{1}{6\,\Omega}$$

$$\frac{1}{R_T} = \frac{1+1}{6\,\Omega} = \frac{2}{6\,\Omega}$$

$$R_T = \frac{6\,\Omega}{2} = 3\,\Omega$$

(Continued)

Example 3 (Continued)

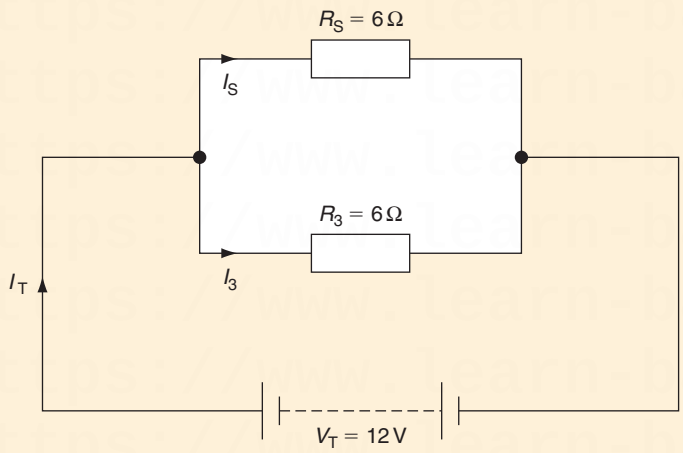

Figure 9.19 Simplified equivalent circuit for Example 2.

The total current is

$$I_T = \frac{V_T}{R_T} = \frac{12\text{ V}}{3\,\Omega} = 4\text{ A}$$

Let us call the current flowing through resistor R_3 I_3

$$\therefore\ I_3 = \frac{V_T}{R_3} = \frac{12\text{ V}}{6\,\Omega} = 2\text{ A}$$

Let us call the current flowing through both resistors R_1 and R_2, as shown in Fig. 9.18, I_S

$$\therefore\ I_S = \frac{V_T}{R_S} = \frac{12\text{ V}}{6\,\Omega} = 2\text{ A}$$

Measuring volts and amps

The type of instrument to be purchased for general use in the electrotechnical industries is a difficult choice because there are so many different types on the market and every manufacturer's representative is convinced that his company's product is the best. However, most instruments can be broadly grouped under two general headings: those having *analogue* and those with *digital* displays.

Analogue meters or instruments

Analogue meters have a pointer moving across a calibrated scale. They are the only choice when a general trend or variation in value is to be observed. Hi-fi equipment often uses analogue displays to indicate how power levels vary with time, which is more informative than a specific value. Red or danger zones can be indicated on industrial instruments. The fuel gauge on a motor car often indicates full, half full or danger on an analogue display which is much more informative than an indication of the exact number of litres of petrol remaining in the tank.

Definition

Analogue meters have a pointer moving across a calibrated scale.

Figure 9.20 Digital multimeter suitable for testing electrical and electronic circuits.

These meters are only accurate when used in the calibrated position – usually horizontally.

Most meters using an analogue scale incorporate a mirror to eliminate parallax error. The user must look straight at the pointer on the scale when taking readings and the correct position is indicated when the pointer image in the mirror is hidden behind the actual pointer. That is the point at which a reading should be taken from the appropriate scale of the instrument.

Digital meters or instruments

Digital meters provide the same functions as analogue meters but they display the indicated value using a seven-segment LED to give a numerical value of the measurement. Modern digital meters use semiconductor technology to give the instrument a very high-input impedance, typically about 10 MΩ and, therefore, they are ideal for testing most electrical or electronic circuits.

The choice between an analogue and a digital display is a difficult one and must be dictated by specific circumstances. However, if you are an electrician or service engineer intending to purchase a new instrument, I think on balance that a good-quality digital multimeter such as that shown in Fig. 9.20 would be best. Having no moving parts, digital meters tend to be more rugged and, having a very high-input impedance, they are ideally suited to testing all circuits that an electrician might work on in his daily work.

Definition

Digital meters provide the same functions as analogue meters but they display the indicated value using a seven-segment LED to give a numerical value of the measurement.

The multimeter

Multimeters are designed to measure voltage, current or resistance. Before taking measurements the appropriate volt, ampere or ohm scale should be selected. To avoid damaging the instrument it is good practice first to switch to the highest value on a particular scale range. For example, if the 10 A scale is first selected and a reading of 2.5 A is displayed, we then know that a more appropriate scale would be the 3 A or 5 A range. This will give a more accurate reading which might be, say, 2.49 A. When the multimeter is used as an ammeter to measure current it must be connected in series with the test circuit, as shown in Fig. 9.21(a). When used as a voltmeter the multimeter must be connected in parallel with the component, as shown in Fig. 9.21(b).

When using a commercial multirange meter as an ohmmeter for testing electronic components, care must be exercised in identifying the positive terminal. The red terminal of the meter, identifying the positive input for testing voltage and current, usually becomes the negative terminal when the meter is used as an ohmmeter because of the way the internal battery is connected to the meter movement. Check the meter manufacturers handbook before using a multimeter to test electronic components.

Safety first

Voltmeters and Ammeters

Electrical test meters are expensive and easy to steal

- protect them by placing in their protective case
- keep them safe, out of sight and locked up.

The three effects of an electric current

When an electric current flows in a circuit it can have one or more of the following three effects: *heating, magnetic* or *chemical*.

Definition

When an electric current flows in a circuit it can have one or more of the following three effects: *heating, magnetic* or *chemical*.

Heating effect

The movement of electrons within a conductor, which is the flow of an electric current, causes an increase in the temperature of the conductor. The amount of heat generated by this current flow depends upon the type and dimensions of

the conductor and the quantity of current flowing. By changing these variables, a conductor may be operated hot and used as the heating element of a fire, or be operated cool and used as an electrical installation conductor.

The heating effect of an electric current is also the principle upon which a fuse gives protection to a circuit. The fuse element is made of a metal with a low melting point and forms a part of the electrical circuit. If an excessive current flows, the fuse element overheats and melts, breaking the circuit.

Magnetic effect

Whenever a current flows in a conductor a magnetic field is set up around the conductor like an extension of the insulation. The magnetic field increases with the current and collapses if the current is switched off. A conductor carrying current and wound into a solenoid produces a magnetic field very similar to a permanent magnet, but has the advantage of being switched on and off by any switch which controls the circuit current.

The magnetic effect of an electric current is the principle upon which electric bells, relays, instruments, motors and generators work.

Chemical effect

When an electric current flows through a conducting liquid, the liquid is separated into its chemical parts. The conductors which make contact with the liquid are called the anode and cathode. The liquid itself is called the electrolyte, and the process is called *electrolysis*.

Electrolysis is an industrial process used in the refining of metals and electroplating. It was one of the earliest industrial applications of electric current. Most of the aluminium produced today is extracted from its ore by electrochemical methods. Electroplating serves a double purpose by protecting a base metal from atmospheric erosion and also giving it a more expensive and attractive appearance. Silver and nickel plating has long been used to enhance the appearance of cutlery, candlesticks and sporting trophies.

An anode and cathode of dissimilar metal placed in an electrolyte can react chemically and produce an e.m.f. When a load is connected across the anode and cathode, a current is drawn from this arrangement, which is called a cell. A battery is made up of a number of cells. It has many useful applications in providing portable electrical power, but electrochemical action can also be undesirable since it is the basis of electrochemical corrosion which rots our motor cars, industrial containers and bridges.

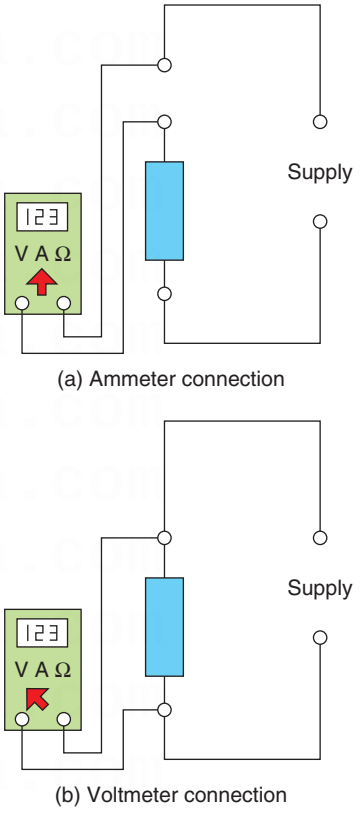

Figure 9.21 Using a multimeter (a) as an ammeter and (b) as a voltmeter.

Magnetism

The Greeks knew as early as 600 BC that a certain form of iron ore, now known as magnetite or lodestone, had the property of attracting small pieces of iron. Later, during the Middle Ages, navigational compasses were made using the magnetic properties of lodestone. Small pieces of lodestone attached to wooden splints floating in a bowl of water always came to rest pointing in a north–south direction. The word lodestone is derived from an old English word meaning 'the way', and the word magnetism is derived from Magnesia, the place where magnetic ore was first discovered.

Iron, nickel and cobalt are the only elements which are attracted strongly by a magnet. These materials are said to be *ferromagnetic*. Copper, brass, wood, PVC and glass are not attracted by a magnet and are, therefore, described as *non-magnetic*.

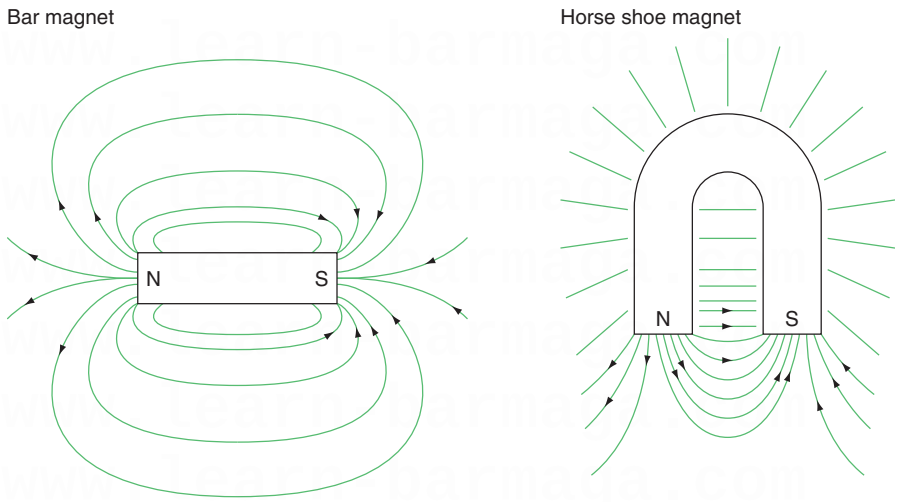

Figure 9.22 Magnetic fields around a permanent magnet.

Definition

The region of space through which the influence of a magnet can be detected is called the *magnetic field* of that magnet.

Definition

The places on a magnetic material where the lines of flux are concentrated are called the *magnetic poles*.

Definition

Like poles repel; unlike poles attract. These two statements are sometimes called the 'first laws of magnetism' and are shown in Fig. 9.23.

Some basic rules of magnetism

1. Lines of magnetic flux have no physical existence, but they were introduced by Michael Faraday (1791–1867) as a way of explaining the magnetic energy existing in space or in a material. They help us to visualize and explain the magnetic effects. The symbol used for magnetic flux is the Greek letter Φ (phi) and the unit of magnetic flux is the weber (symbol Wb), pronounced 'veber', to commemorate the work of the German physicist Wilhelm Weber (1804–1891).
2. Lines of magnetic flux always form closed loops.
3. Lines of magnetic flux behave like stretched elastic bands, always trying to shorten themselves.
4. Lines of magnetic flux never cross over each other.
5. Lines of magnetic flux travel along a magnetic material and always emerge out of the 'north pole' end of the magnet.
6. Lines of magnetic flux pass through space and non-magnetic materials undisturbed.
7. The region of space through which the influence of a magnet can be detected is called the **magnetic field** of that magnet.
8. The number of lines of magnetic flux within a magnetic field is a measure of the flux density. Strong magnetic fields have a high-flux density. The symbol used for flux density is B, and the unit of flux density is the tesla (symbol T), to commemorate the work of the Croatian-born American physicist Nikola Tesla (1856–1943).
9. The places on a magnetic material where the lines of flux are concentrated are called the **magnetic poles**.
10. Like poles repel; unlike poles attract. These two statements are sometimes called the 'first laws of magnetism' and are shown in Fig. 9.23.

Magnetic fields

If a permanent magnet is placed on a surface and covered by a piece of paper, iron filings can be shaken on to the paper from a dispenser. Gently tapping the paper then causes the filings to take up the shape of the magnetic field surrounding the permanent magnet. The magnetic fields around a permanent magnet are shown in Figs 9.22 and 9.23.

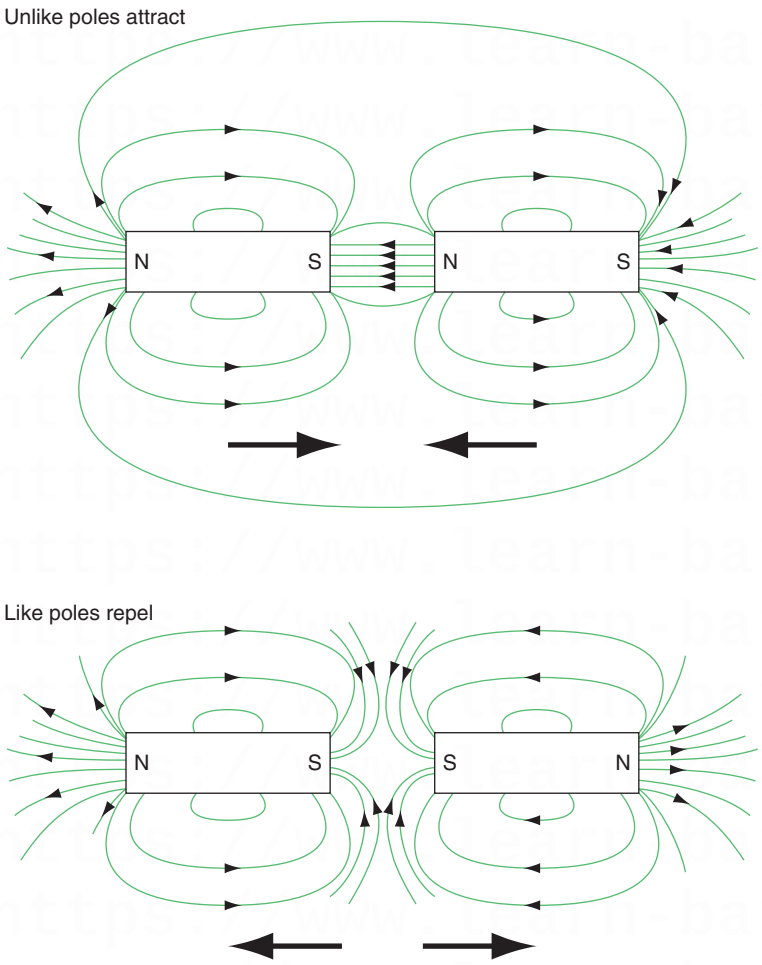

Figure 9.23 The first laws of magnetism.

Electromagnetism

Electricity and magnetism have been inseparably connected since the experiments by Oersted and Faraday in the early nineteenth century. An electric current flowing in a conductor produces a magnetic field 'around' the conductor which is proportional to the current. Thus a small current produces a weak magnetic field, while a large current will produce a strong magnetic field. The magnetic field 'spirals' around the conductor, as shown in Fig. 9.24 and its direction can be determined by the 'dot' or 'cross' notation and the 'screw rule'. To do this, we think of the current as being represented by a dart or arrow inside the conductor. The dot represents current coming towards us when we would see the point of the arrow or dart inside the conductor. The cross represents current going away from us when we would see the flights of the dart or arrow. Imagine a corkscrew or screw being turned so that it will move in the direction of the current. Therefore, if the current was coming out of the paper, as shown in Fig. 9.24(a), the magnetic field would be spiralling anticlockwise around the conductor. If the current was going into the paper, as shown by Fig. 9.24(b), the magnetic field would spiral clockwise around the conductor.

A current flowing in a *coil* of wire or solenoid establishes a magnetic field which is very similar to that of a bar magnet. Winding the coil around a soft iron core

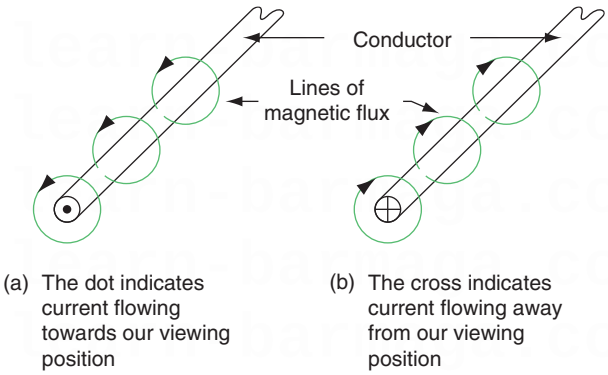

Figure 9.24 Magnetic fields around a current carrying conductor.

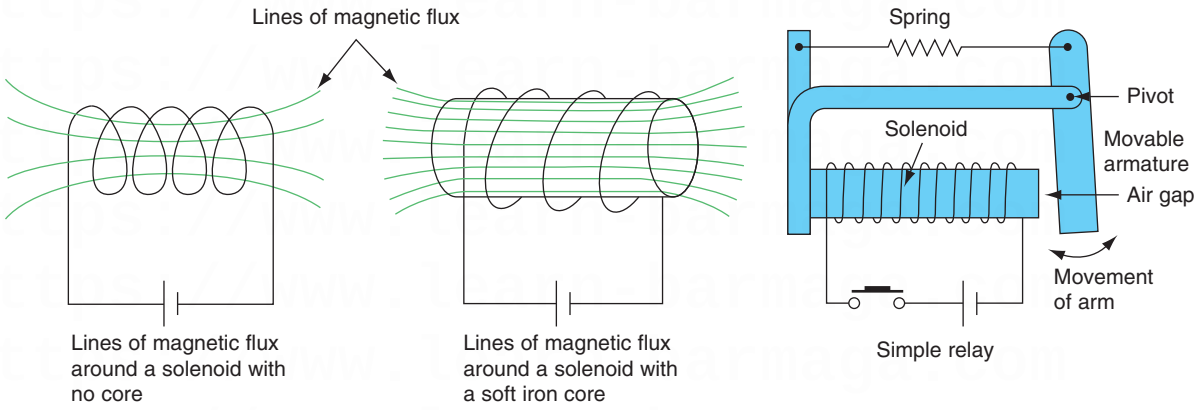

Figure 9.25 The solenoid and one practical application: the relay.

increases the flux density because the lines of magnetic flux concentrate on the magnetic material. The advantage of the electromagnet when compared with the permanent magnet is that the magnetism of the electromagnet can be switched on and off by a functional switch controlling the coil current. This effect is put to practical use in the electrical relay as used in a motor starter or alarm circuit. Figure 9.25 shows the structure and one application of the solenoid.

The electrical relay

A **relay** is an electromagnetic switch operated by a solenoid. We looked at the action of a solenoid in Fig. 9.25. The solenoid in a relay operates a number of switch contacts as it moves under the electromagnetic forces. Relays can be used to switch circuits on or off at a distance remotely. The energizing circuit, the solenoid, is completely separate to the switch contacts and, therefore, the relay can switch high voltage, high power circuits, from a low voltage switching circuit. This gives the relay many applications in motor control circuits, electronics and instrumentation systems. Figure 9.26 shows a simple relay.

Definition

A *relay* is an electromagnetic switch operated by a solenoid.

Electrical transformers

A transformer is an electrical machine without moving parts, which is used to change the value of an alternating voltage.

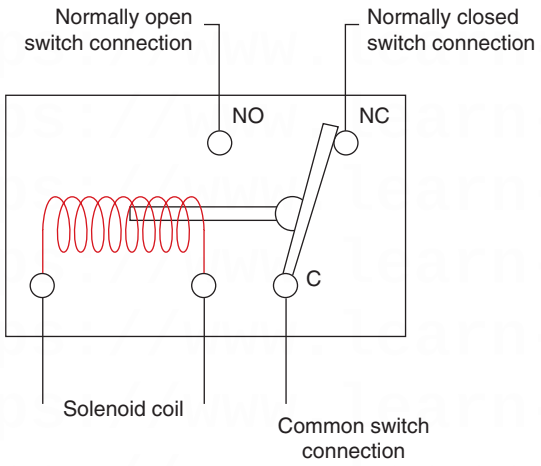

Figure 9.26 A simple relay.

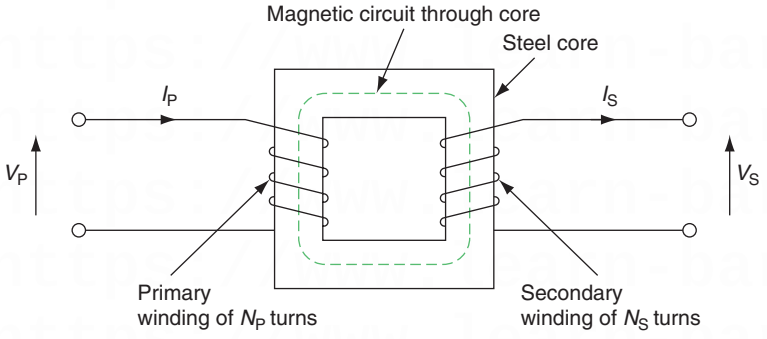

Figure 9.27 A simple transformer.

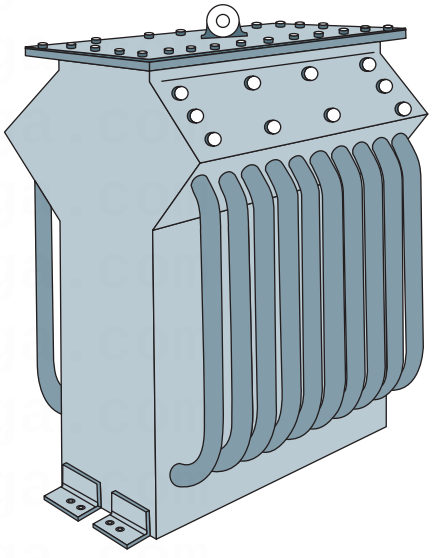

Figure 9.28 Typical oil filled power transformer.

A transformer will only work on an alternating supply, it will not normally work from a d.c. supply such as a battery.

- A transformer such as that shown in Fig. 9.27 consists of two coils called the primary and secondary coils or windings, wound on to a common core. The iron core of the transformer is not solid but made up of very thin sheets called laminations, to improve efficiency.
- An alternating voltage applied to the primary winding establishes an alternating magnetic flux in the core.
- The magnetic flux in the core causes a voltage to be induced in the secondary winding of the transformers.
- The voltage in both the primary and secondary windings is proportional to the number of turns.
- This means that if you increase the number of secondary turns you will increase the output voltage. This has an application in power distribution.
- Alternatively, reducing the number of secondary turns will reduce the output voltage. This is useful for low voltage supplies such as domestic bell transformers. Because it has no moving parts, a transformer can have a very high efficiency. Large power transformers, used on electrical distribution systems, can have an efficiency of better than 90%.

Large power transformers need cooling to take the heat generated away from the core. This is often achieved by totally immersing the core and windings in insulating oil. A sketch of an oil filled transformer can be seen in Fig. 9.28.

Very small transformers are used in electronic applications. Small transformers are used as isolating transformers in shaver sockets and can also be used to supply separated extra low voltage (SELV) sources. Equipment supplied from a SELV source may be installed in a bathroom or shower-room, provided that it is suitably enclosed and protected from the ingress of moisture. This includes equipment such as water heaters, pumps for showers and whirlpool baths.

Try this

Have you seen any transformers in action? Were they big or small – what were they being used for? Have you been close up to a transmission tower, perhaps when you were walking in the countryside?

Alternating current theory

Commercial quantities of electricity for industry, commerce and domestic use are generated as a.c. in large power stations and distributed around the United Kingdom on the national grid to the end user. The d.c. electricity has many applications where portability or an emergency stand-by supply is important but for large quantities of power it has to be an a.c. supply because it is so easy to change the voltage levels using a transformer.

Rotating a simple loop of wire or coils of wire between the poles of a magnet, such as that shown simplified in Fig. 9.29, will cut the north south lines of magnetic flux and induce an a.c. voltage in the loop or coils of wire as shown by the display on a cathode ray oscilloscope.

This is an a.c. supply, an alternating current supply. The basic principle of the a.c. supply generated in a power station is exactly the same as Fig. 9.29 except that powerful electromagnets are used and the power for rotation comes from a steam turbine.

In this section we will first of all consider the theoretical circuits of pure resistance, inductance and capacitance acting alone in an a.c. circuit before going on to consider the practical circuits of resistance, inductance and capacitance acting together. Let us first define some of our terms of reference.

Key fact

Definitions

- Try to remember these a.c. circuit definitions
- Write them down if it helps.

Definition

In any circuit, *resistance* is defined as opposition to current flow.

Resistance

In any circuit, **resistance** is defined as opposition to current flow. From Ohm's law:

$$R = \frac{V_R}{I_R} (\Omega)$$

However, in an a.c. circuit, resistance is only part of the opposition to current flow. The inductance and capacitance of an a.c. circuit also cause an opposition to current flow, which we call *reactance*.

Inductive reactance (X_L) is the opposition to an a.c. current in an inductive circuit. It causes the current in the circuit to lag behind the applied voltage, as shown in Fig. 9.30. It is given by the formula:

$$X_L = 2\pi fL \ (\Omega)$$

Definition

Inductive reactance (X_L) is the opposition to an a.c. current in an inductive circuit. It causes the current in the circuit to lag behind the applied voltage.

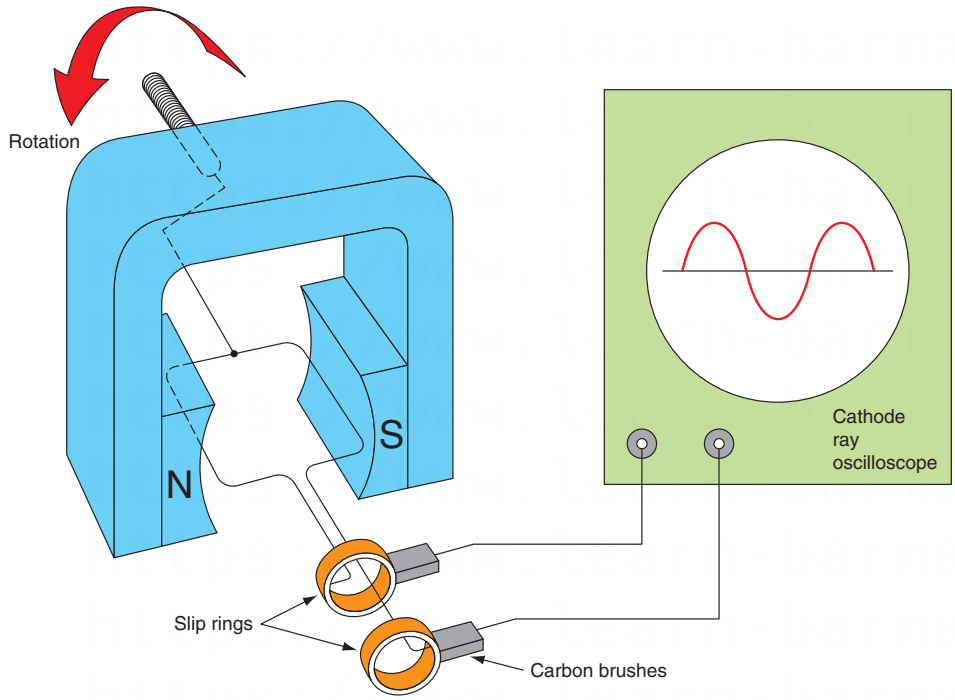

Figure 9.29 Simple a.c. generator or alternator.

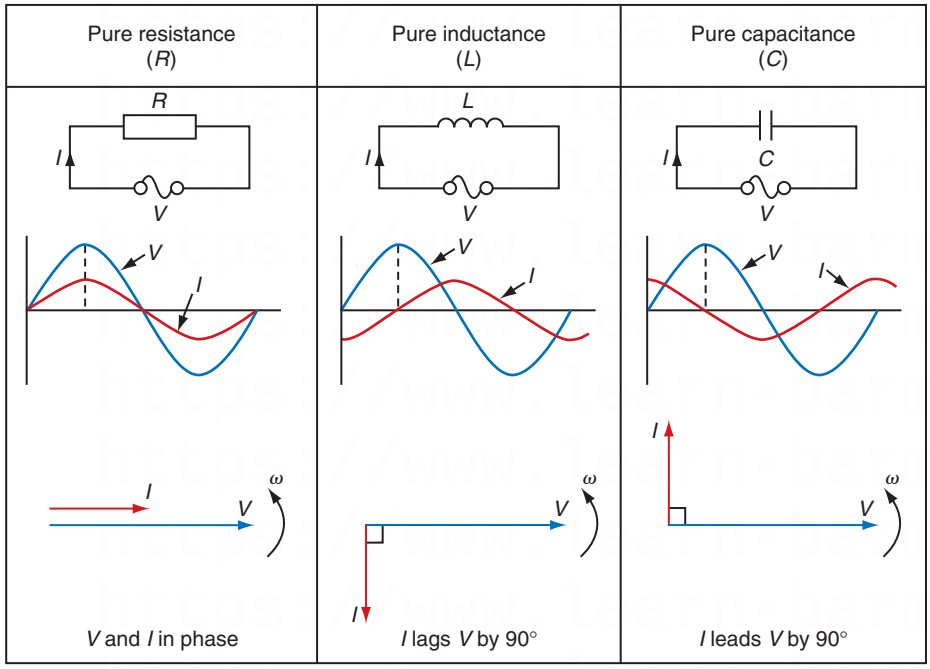

Figure 9.30 Voltage and current relationships in resistive, capacitive and inductive circuits.

where

π = 3.142 (a constant)
F = the frequency of the supply
L = the inductance of the circuit or by

$$X_L = \frac{V_L}{I_L}$$

Definition

Capacitive reactance (X_C) is the opposition to an a.c. current in a capacitive circuit. It causes the current in the circuit to lead ahead of the voltage.

Capacitive reactance (X_C) is the opposition to an a.c. current in a capacitive circuit. It causes the current in the circuit to lead ahead of the voltage, as shown in Fig. 9.30. It is given by the formula:

$$X_C = \frac{1}{2\pi fC} \ (\Omega)$$

where π and f are defined as before and C is the capacitance of the circuit. It can also be expressed as:

$$X_C = \frac{V_C}{I_C}$$

Example

Calculate the reactance of a 150 μF capacitor and a 0.05 H inductor if they were separately connected to the 50 Hz mains supply.

For capacitive reactance:

$$X_C = \frac{1}{2\pi fC}$$

where $f = 50\,\text{Hz}$ and $C = 150\,\mu\text{F} = 150 \times 10^{-6}\,\text{F}$

$$\therefore X_C = \frac{1}{2 \times 3.142 \times 50\,\text{Hz} \times 150 \times 10^{-6}\,\text{F}} = 21.2\,\Omega$$

For inductive reactance:

$$X_L = 2\pi fL$$

where $f = 50\,\text{Hz}$ and $L = 0.05\,\text{H}$

$$\therefore X_L = 2 \times 3.142 \times 50\,\text{Hz} \times 0.05\,\text{H} = 15.7\,\Omega$$

Impedance

Definition

The total opposition to current flow in an a.c. circuit is called *impedance* and given the symbol Z.

The total opposition to current flow in an a.c. circuit is called **impedance** and given the symbol Z. Thus impedance is the combined opposition to current flow of the resistance, inductive reactance and capacitive reactance of the circuit and can be calculated from the formula:

$$Z = \sqrt{R^2 + X^2} \ (\Omega)$$

or

$$Z = \frac{V_T}{I_T}$$

Example 1

Calculate the impedance when a 5 Ω resistor is connected in series with a 12 Ω inductive reactance.

$$Z = \sqrt{R^2 + X_L^2}\ (\Omega)$$
$$\therefore Z = \sqrt{5^2 + 12^2}$$
$$Z = \sqrt{25 + 144}$$
$$Z = \sqrt{169}$$
$$Z = 13\,\Omega$$

Example 2

Calculate the impedance when a 48 Ω resistor is connected in series with a 55 Ω capacitive reactance.

$$Z = \sqrt{R^2 + X_C^2}\ (\Omega)$$
$$\therefore Z = \sqrt{48^2 + 55^2}$$
$$Z = \sqrt{2304 + 3025}$$
$$Z = \sqrt{5329}$$
$$Z = 73\,\Omega$$

Resistance, inductance and capacitance in an a.c. circuit

When a resistor only is connected to an a.c. circuit the current and voltage waveforms remain together, starting and finishing at the same time. We say that the waveforms are *in phase*.

When a pure inductor is connected to an a.c. circuit the current lags behind the voltage waveform by an angle of 90°. We say that the current *lags* the voltage by 90°. When a pure capacitor is connected to an a.c. circuit the current *leads* the voltage by an angle of 90°. These various effects can be observed on an oscilloscope, but the circuit diagram, waveform diagram and phasor diagram for each circuit are shown in Fig. 9.30.

Phasor diagrams

Phasor diagrams and a.c. circuits are an inseparable combination. Phasor diagrams allow us to produce a model or picture of the circuit under consideration which helps us to understand the circuit. A phasor is a straight line, having definite length and direction, which represents to scale the magnitude and direction of a quantity such as a current, voltage or impedance.

To find the combined effect of two quantities we combine their phasors by adding the beginning of the second phasor to the end of the first. The combined effect of the two quantities is shown by the resultant phasor, which is measured from the original zero position to the end of the last phasor.

Definition

A *phasor* is a straight line, having definite length and direction, which represents to scale the magnitude and direction of a quantity such as a current, voltage or impedance.

Example

Find by phasor addition the combined effect of currents *A* and *B* acting in a circuit. Current *A* has a value of 4 A, and current *B* a value of 3 A, leading *A* by 90°.We usually assume phasors to rotate anticlockwise and so the complete diagram will be as shown in Fig. 9.31. Choose a scale of, for example, 1 A = 1 cm and draw the phasors to scale, that is *A* = 4 cm and *B* = 3 cm, leading *A* by 90°.

The magnitude of the resultant phasor can be measured from the phasor diagram and is found to be 5 A acting at a phase angle ϕ of about 37° leading *A*. We therefore say that the combined effect of currents *A* and *B* is a current of 5 A at an angle of 37° leading *A*.

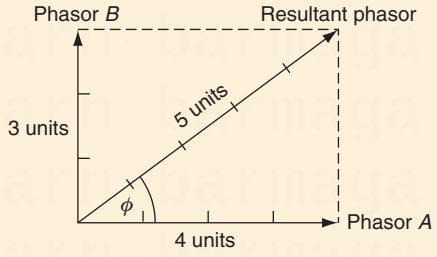

Figure 9.31 The phasor addition of currents A and B.

Phase angle ϕ

In an a.c. circuit containing resistance only, such as a heating circuit, the voltage and current are in phase, which means that they reach their peak and zero values together, as shown in Fig. 9.32(a).

In an a.c. circuit containing inductance, such as a motor or discharge lighting circuit, the current often reaches its maximum value after the voltage, which means that the current and voltage are out of phase with each other, as shown in Fig. 9.32(b). The phase difference, measured in degrees between the current and voltage, is called the phase angle of the circuit, and is denoted by the symbol ϕ, the lower-case Greek letter phi.

When circuits contain two or more separate elements, such as RL, RC or RLC, the phase angle between the total voltage and total current will be neither 0° nor 90° but will be determined by the relative values of resistance and reactance in the circuit. In Fig. 9.33 the phase angle between applied voltage and current is some angle ϕ.

Alternating current series circuits

In a circuit containing a resistor and inductor connected in series as shown in Fig. 9.33, the current *I* will flow through the resistor and the inductor causing the voltage V_R to be dropped across the resistor and V_L to be dropped across the inductor. The sum of these voltages will be equal to the total voltage V_T but because this is an a.c. circuit the voltages must be added by phasor addition. The result is shown in Fig. 9.33, where V_R is drawn to scale and in phase with

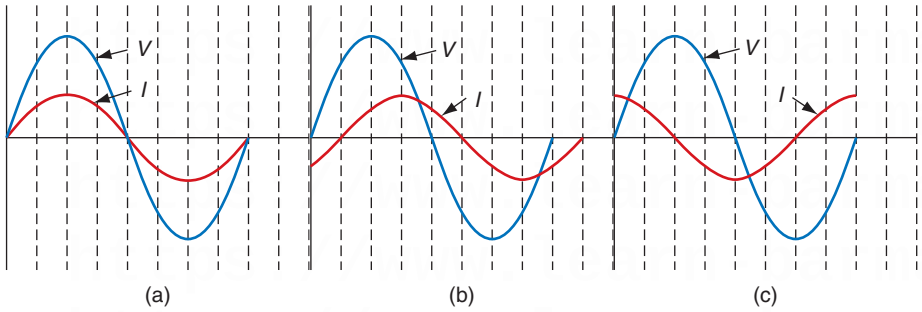

Figure 9.32 Phase relationship of a.c. waveform: (a) V and I in phase, phase angle $\phi = 0°$ and power factor = cos ϕ = 1; (b) V and I displaced by 45°, $\phi = 45°$ and p.f. = 0.707; and (c) V and I displaced by 90°, $\phi = 90°$ and p.f. = 0.

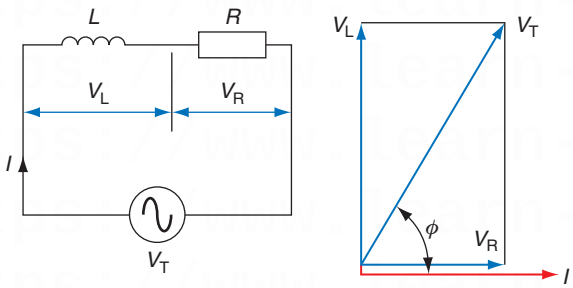

Figure 9.33 A series RL circuit and phasor diagram.

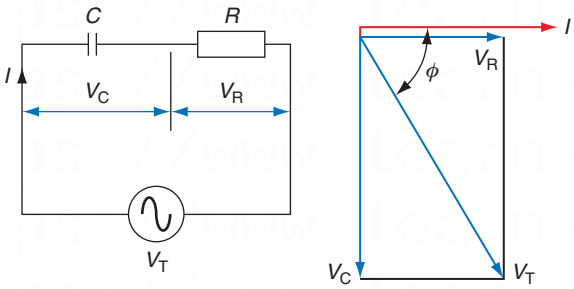

Figure 9.34 A series RC circuit and phasor diagram.

the current and V_L is drawn to scale and leading the current by 90°. The phasor addition of these two voltages gives us the magnitude and direction of V_T, which leads the current by some angle ϕ.

In a circuit containing a resistor and capacitor connected in series as shown in Fig. 9.34, the current I will flow through the resistor and capacitor causing voltage drops V_R and V_C. The voltage V_R will be in phase with the current and V_C will lag the current by 90°. The phasor addition of these voltages is equal to the total voltage V_T which, as can be seen in Fig. 9.34, is lagging the current by some angle ϕ.

The impedance triangle

We have now established the general shape of the phasor diagram for a series a.c. circuit. Figures 9.33 and 9.34 show the voltage phasors, but we know that $V_R = IR$, $V_L = IX_L$, $V_C = IX_C$ and $V_T = IZ$, and therefore the phasor diagrams

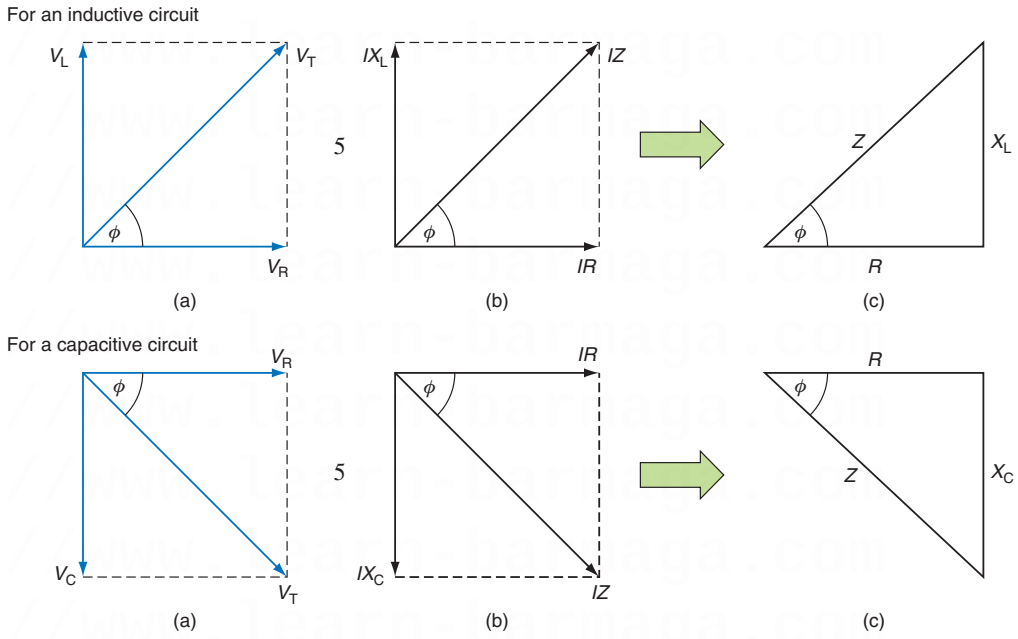

Figure 9.35 Phasor diagram and impedance triangle.

(a) and (b) of Fig. 9.35 must be equal. From Fig. 9.35(b), by the theorem of Pythagoras, we have:

$$(IZ)^2 = (IR)^2 + (IX)^2$$
$$I^2Z^2 = I^2R^2 + I^2X^2$$

If we now divide throughout by I^2 we have:

$$Z^2 = R^2 + X^2$$
$$\text{or } Z = \sqrt{R^2 + X^2}\ \Omega$$

The phasor diagram can be simplified to the impedance triangle given in Fig. 9.35(c).

Example 1

A coil of 0.15 H is connected in series with a 50 Ω resistor across a 100 V 50 Hz supply. Calculate (a) the reactance of the coil, (b) the impedance of the circuit and (c) the current.

For (a)

$$X_L = 2\pi fL\ (\Omega)$$
$$\therefore X_L = 2 \times 3.142 \times 50\text{ Hz} \times 0.15\text{ H} = 47.1\,\Omega$$

For (b)

$$Z = \sqrt{R^2 + X^2}\ (\Omega)$$
$$\therefore Z = \sqrt{(50\,\Omega)^2 + (47.1\,\Omega)^2} = 68.69\,\Omega$$

For (c)

$$I = \frac{V}{Z}\ (\text{A})$$
$$\therefore I = \frac{100\,V}{68.69\,\Omega} = 1.46\text{ A}$$

Example 2

A 60 μF capacitor is connected in series with a 100 Ω resistor across a 230 V 50 Hz supply. Calculate (a) the reactance of the capacitor, (b) the impedance of the circuit and (c) the current.

For (a)

$$X_C = \frac{1}{2\pi fC}\ (\Omega)$$

$$\therefore X_C = \frac{1}{2\pi \times 50\,\text{Hz} \times 60 \times 10^{-6}\,\text{F}} = 53.05\,\Omega$$

For (b)

$$Z = \sqrt{R^2 + X^2}\ (\Omega)$$

$$\therefore Z = \sqrt{(100\,\Omega)^2 + (53.05\,\Omega)^2} = 113.2\,\Omega$$

For (c)

$$I = \frac{V}{Z}\ (\text{A})$$

$$\therefore I = \frac{230\,\text{V}}{113.2\,\Omega} = 2.03\,\text{A}$$

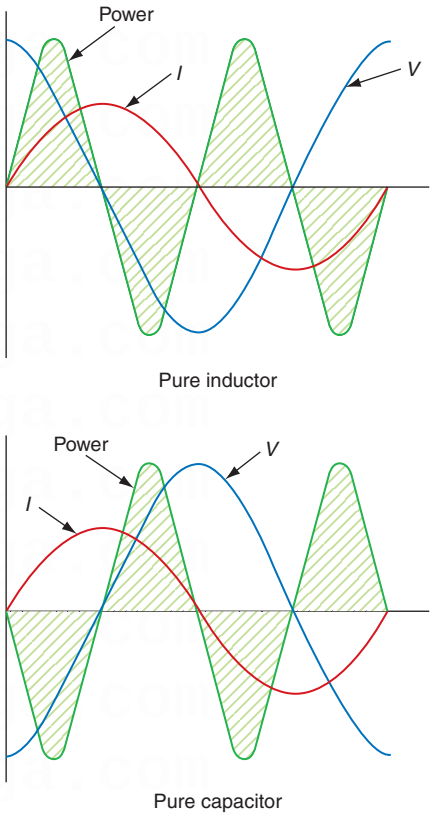

Figure 9.36 Waveform for the a.c. power in purely inductive and purely capacitive circuits.

Power and power factor

Power factor (p.f.) is defined as the cosine of the phase angle between the current and voltage:

$$\text{p.f.} = \cos\phi$$

If the current lags the voltage as shown in Fig. 9.33, we say that the p.f. is lagging, and if the current leads the voltage as shown in Fig. 9.34, the p.f. is said to be leading. From the trigonometry of the impedance triangle shown in Fig. 9.35, p.f. is also equal to:

$$\text{p.f.} = \cos\phi = \frac{R}{Z} = \frac{V_R}{V_T}$$

Definition

Power factor (p.f.) is defined as the cosine of the phase angle between the current and voltage.

The electrical power in a circuit is the product of the instantaneous values of the voltage and current. Figure 9.36 shows the voltage and current waveform for a pure inductor and pure capacitor. The power waveform is obtained from the product of V and I at every instant in the cycle. It can be seen that the power waveform reverses every quarter cycle, indicating that energy is alternately being fed into and taken out of the inductor and capacitor. When considered over one complete cycle, the positive and negative portions are equal, showing that the average power consumed by a pure inductor or capacitor is zero. This shows that inductors and capacitors store energy during one part of the voltage cycle and feed it back into the supply later in the cycle. Inductors store energy as a magnetic field and capacitors as an electric field.

In an electric circuit more power is taken from the supply than is fed back into it, since some power is dissipated by the resistance of the circuit, and therefore:

$$P = I^2R\ (\text{W})$$

In any d.c. circuit the power consumed is given by the product of the voltage and current, because in a d.c. circuit voltage and current are in phase. In an a.c. circuit the power consumed is given by the product of the current and that part of the voltage which is in phase with the current. The in-phase component of the voltage is given by $V \cos \phi$, and so power can also be given by the equation:

$$P = VI \cos \phi \text{ (W)}$$

Example 1

A coil has a resistance of 30 Ω and a reactance of 40 Ω when connected to a 250 V supply. Calculate (a) the impedance, (b) the current, (c) the p.f., and (d) the power.

For (a)

$$Z = \sqrt{R^2 + X^2} \ (\Omega)$$

$$\therefore Z = \sqrt{(30\,\Omega)^2 + (40\,\Omega)^2} = 50\,\Omega$$

For (b)

$$I = \frac{V}{Z} \text{ (A)}$$

$$\therefore I = \frac{250\text{ V}}{50\,\Omega} = 5\text{ A}$$

For (c)

$$\text{p.f.} = \cos \phi = \frac{R}{Z}$$

$$\therefore \text{p.f.} = \frac{30\,\Omega}{50\,\Omega} = 0.6 \text{ lagging}$$

For (d)

$$P = VI \cos \phi \text{ (W)}$$

$$\therefore P = 250\text{ V} \times 5\text{ A} \times 0.6 = 750\text{ W}$$

Example 2

A capacitor of reactance 12 Ω is connected in series with a 9 Ω resistor across a 150 V supply. Calculate (a) the impedance of the circuit, (b) the current, (c) the p.f., and (d) the power.

For (a)

$$Z = \sqrt{R^2 + X^2} \ (\Omega)$$

$$\therefore Z = \sqrt{(9\,\Omega)^2 + (12\,\Omega)^2} = 15\,\Omega$$

For (b)

$$I = \frac{V}{Z} \text{ (A)}$$

$$\therefore I = \frac{150\text{ V}}{15\,\Omega} = 10\text{ A}$$

For (c)

$$\text{p.f.} = \cos \phi = \frac{R}{Z}$$

$$\therefore \text{p.f.} = \frac{9\,\Omega}{15\,\Omega} = 0.6 \text{ leading}$$

For (d)

$$P = VI \cos \phi \text{ (W)}$$

$$\therefore P = 150\text{ V} \times 10\text{ A} \times 0.6 = 900\text{ W}$$

The power factor of most industrial loads is lagging because the machines and discharge lighting used in industry are mostly inductive. This causes an additional magnetizing current to be drawn from the supply, which does not produce power, but does need to be supplied, making supply cables larger.

Example 3

A 230 V supply feeds three 1.84 kW loads with power factors of 1, 0.8 and 0.4. Calculate the current at each power factor.

The current is given by:

$$I = \frac{P}{V \cos \phi}$$

where P = 1.84 kW = 1840 W and V = 230 V. If the p.f. is 1, then:

$$I = \frac{1840\,\text{W}}{230\,\text{V} \times 1} = 8\,\text{A}$$

For a p.f. of 0.8:

$$I = \frac{1840\,\text{W}}{230\,\text{V} \times 0.8} = 10\,\text{A}$$

For a p.f. of 0.4:

$$I = \frac{1840\,\text{W}}{230\,\text{V} \times 0.4} = 20\,\text{A}$$

It can be seen from these calculations that a 1.84 kW load supplied at a power factor of 0.4 would require a 20 A cable, while the same load at unity power factor could be supplied with an 8 A cable. There may also be the problem of higher voltage drops in the supply cables. As a result, the supply companies encourage installation engineers to improve their power factor to a value close to 1 and sometimes charge penalties if the power factor falls below 0.8.

Power factor correction

Most installations have a low or bad power factor because of the inductive nature of the load. A capacitor has the opposite effect of an inductor, and so it seems reasonable to add a capacitor to a load which is known to have a lower or bad power factor, for example, a motor.

Figure 9.37(a) shows an industrial load with a low power factor. If a capacitor is connected in parallel with the load, the capacitor current I_C leads the applied voltage by 90°. When this capacitor current is added to the load current as shown in Fig. 9.37(b) the resultant load current has a much improved power factor. However, using a slightly bigger capacitor, the load current can be pushed up until it is 'in phase' with the voltage as can be seen in Fig. 9.37(c).

Capacitors may be connected across the main busbars of industrial loads in order to provide power factor improvement, but smaller capacitors may also be connected across an individual piece of equipment, as is the case for fluorescent light fittings.

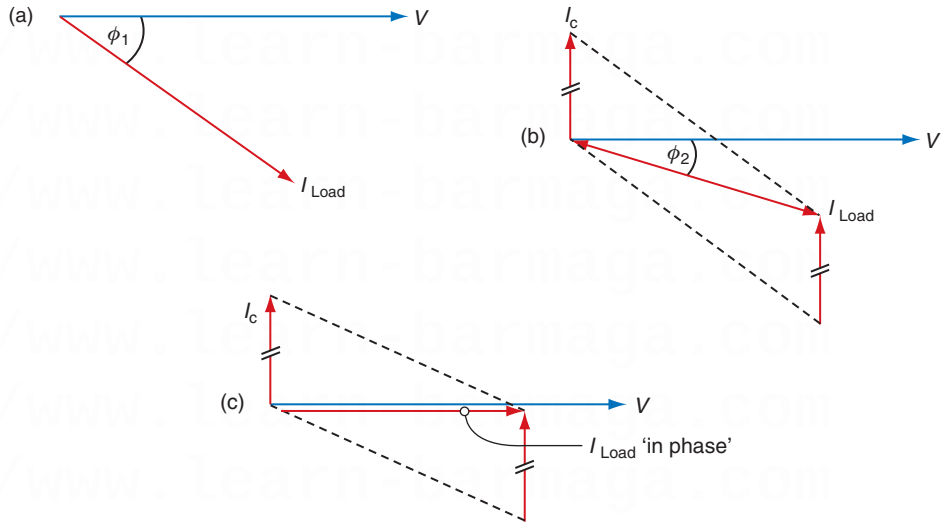

Figure 9.37 Power factor improvement using capacitors.

Electrical machines

All electrical machines operate on the principles of magnetism. The basic rules of magnetism were laid down earlier in this chapter. Here we will look at some of the laws of magnetism as they apply to electrical machines, such as generators, motors and transformers.

A current carrying conductor maintains a magnetic field around the conductor which is proportional to the current flowing. When this magnetic field interacts with another magnetic field, forces are exerted which describe the basic principles of electric motors.

Michael Faraday demonstrated on 29 August 1831 that electricity could be produced by magnetism. He stated that 'when a conductor cuts or is cut by a magnetic field an e.m.f. is induced in that conductor. The amount of induced e.m.f. is proportional to the rate or speed at which the magnetic field cuts the conductor'. This basic principle laid down the laws of present-day electricity generation where a strong magnetic field is rotated inside a coil of wire to generate electricity.

Self and mutual inductance

If a coil of wire is wound on to an iron core as shown in Fig. 9.38, a magnetic field will become established in the core when a current flows in the coil due to the switch being closed.

When the switch is opened the current stops flowing and, therefore, the magnetic flux collapses. The collapsing magnetic flux induces an e.m.f. into the coil and this voltage appears across the switch contacts. The effect is known as *self-inductance*, or just *inductance*, and is one property of any coil. The unit of inductance is the henry (symbol H), to commemorate the work of the American physicist Joseph Henry (1797–1878), and a circuit is said to possess an inductance of 1 henry when an e.m.f. of 1 volt is induced in the circuit by a current changing at the rate of 1 ampere per second.

Fluorescent light fittings contain a choke or inductive coil in series with the tube and starter lamp. The starter lamp switches on and off very quickly, causing

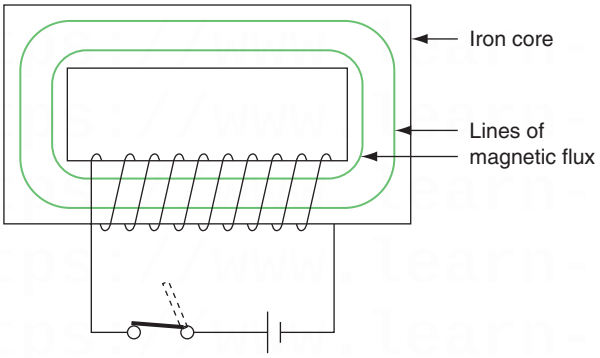

Figure 9.38 An inductive coil or choke.

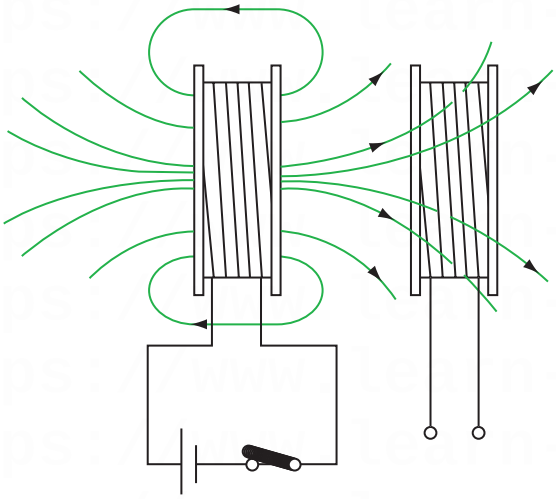

Figure 9.39 Mutual inductance between two coils.

rapid current changes which induce a large voltage across the tube electrodes sufficient to strike an arc in the tube.

When two separate coils are placed close together, as they are in a transformer, a current in one coil produces a magnetic flux which links with the second coil. This induces a voltage in the second coil and is the basic principle of the transformer action which is described later in this chapter. The two coils in this case are said to possess **mutual inductance**, as shown by Fig. 9.39. A mutual inductance of 1 henry exists between two coils when a uniformly varying current of 1 ampere per second in one coil produces an e.m.f. of 1 volt in the other coil.

The e.m.f. induced in a coil such as that shown on the right-hand side in Fig. 9.39 is dependent upon the rate of change of magnetic flux and the number of turns on the coil.

Definition

A *mutual inductance* of 1 henry exists between two coils when a uniformly varying current of 1 ampere per second in one coil produces an e.m.f. of 1 volt in the other coil.

Energy stored in a magnetic field

When we open the switch of an inductive circuit such as an electric motor or fluorescent light circuit the magnetic flux collapses and produces an arc across the switch contacts. The arc is produced by the stored magnetic energy being discharged across the switch contacts.

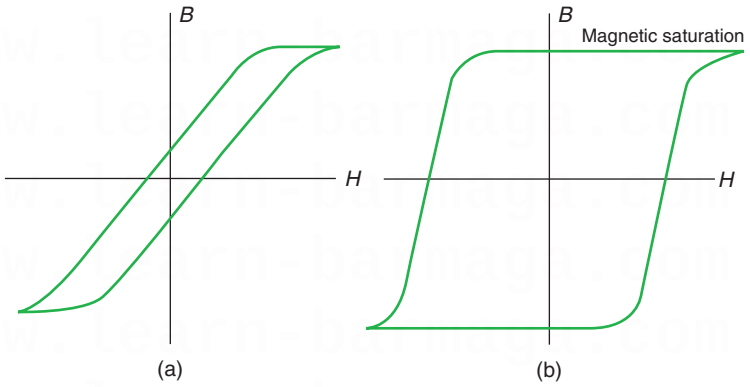

Figure 9.40 Magnetic hysteresis loops: (a) electromagnetic material and (b) permanent magnetic material.

Magnetic hysteresis

There are many different types of magnetic material and they all respond differently to being magnetized. Some materials magnetize easily, and some are difficult to magnetize. Some materials retain their magnetism, while others lose it. The result will look like the graphs shown in Fig. 9.40 and are called hysteresis loops.

Definition

Magnetic hysteresis loops describe the way in which different materials respond to being magnetized.

Magnetic hysteresis loops describe the way in which different materials respond to being magnetized.

Materials from which permanent magnets are made should display a wide hysteresis loop, as shown by loop (b) in Fig. 9.40.

The core of an electromagnet is required to magnetize easily, and to lose its magnetism equally easily when switched off. Suitable materials will, therefore, display a narrow hysteresis loop, as shown by loop (a) in Fig. 9.40.

When an iron core is subjected to alternating magnetization, as in a transformer, the energy loss occurs at every cycle and so constitutes a continuous power loss, and, therefore, for applications such as transformers, a material with a narrow hysteresis loop is required.

Direct current motors

WWW

All electric motors work on the principle that when a current carrying conductor is placed in a magnetic field it will experience a force. An electric motor uses this magnetic force to turn the shaft of the electric motor. Let us try to understand this action. If a current carrying conductor is placed into the field of a permanent magnet as shown in Fig. 9.41(c) a force F will be exerted on the conductor to push it out of the magnetic field.

To understand the force, let us consider each magnetic field acting alone. Figure 9.41(a) shows the magnetic field due to the current carrying conductor only. Figure 9.41(b) shows the magnetic field due to the permanent magnet in which is placed the conductor carrying no current. Figure 9.41(c) shows the effect of the combined magnetic fields which are distorted and, because lines of magnetic flux never cross, but behave like stretched elastic bands, always trying to find the shorter distance between a north and south pole, the force F is exerted on the conductor, pushing it out of the permanent magnetic field.

This is the basic motor principle, and the force F is dependent upon the strength of the magnetic field B, the magnitude of the current flowing in the conductor I and the length of conductor within the magnetic field l. The following equation expresses this relationship:

$$F = BlI \text{ (N)}$$

where B is in tesla, l is in metres, I is in amperes and F is in newtons.

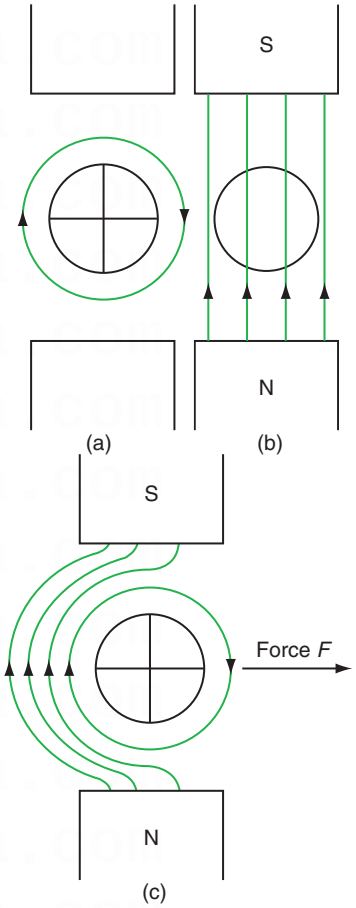

Figure 9.41 Force on a conductor in a magnetic field.

Example

A coil which is made up of a conductor some 15 m in length, lies at right angles to a magnetic field of strength 5 T. Calculate the force on the conductor when 15 A flows in the coil.

$$F = BlI \text{ (N)}$$

$$F = 5\text{T} \times 15\text{m} \times 15\text{A} = 1125\text{N}$$

Practical d.c. motors

Practical motors are constructed as shown in Fig. 9.42. All d.c. motors contain a field winding wound on pole pieces attached to a steel yoke. The armature winding rotates between the poles and is connected to the commutator. Contact with the external circuit is made through carbon brushes rubbing on the commutator segments. Direct current motors are classified by the way in which the field and armature windings are connected, which may be in series or in parallel.

Series motor

The field and armature windings are connected in series and consequently share the same current. The series motor has the characteristics of a high starting torque but a speed which varies with load. Figure 9.43 shows series motor connections and characteristics. For this reason the motor is only suitable for direct coupling to a load, except in very small motors, such as vacuum cleaners and hand drills, and is ideally suited for applications where the machine must start on load, such as electric trains, cranes and hoists.

Reversal of rotation may be achieved by reversing the connections of either the field or armature windings but not both. This characteristic means that the machine will run on both a.c. or d.c. and is, therefore, sometimes referred to as a 'universal' motor.

Three-phase a.c. motors

If a three-phase supply is connected to three separate windings equally distributed around the stationary part or stator of an electrical machine, an alternating current circulates in the coils and establishes a magnetic flux. The magnetic field established by the three-phase currents travels around the stator, establishing a rotating magnetic flux, creating magnetic forces on the rotor which turns the shaft on the motor.

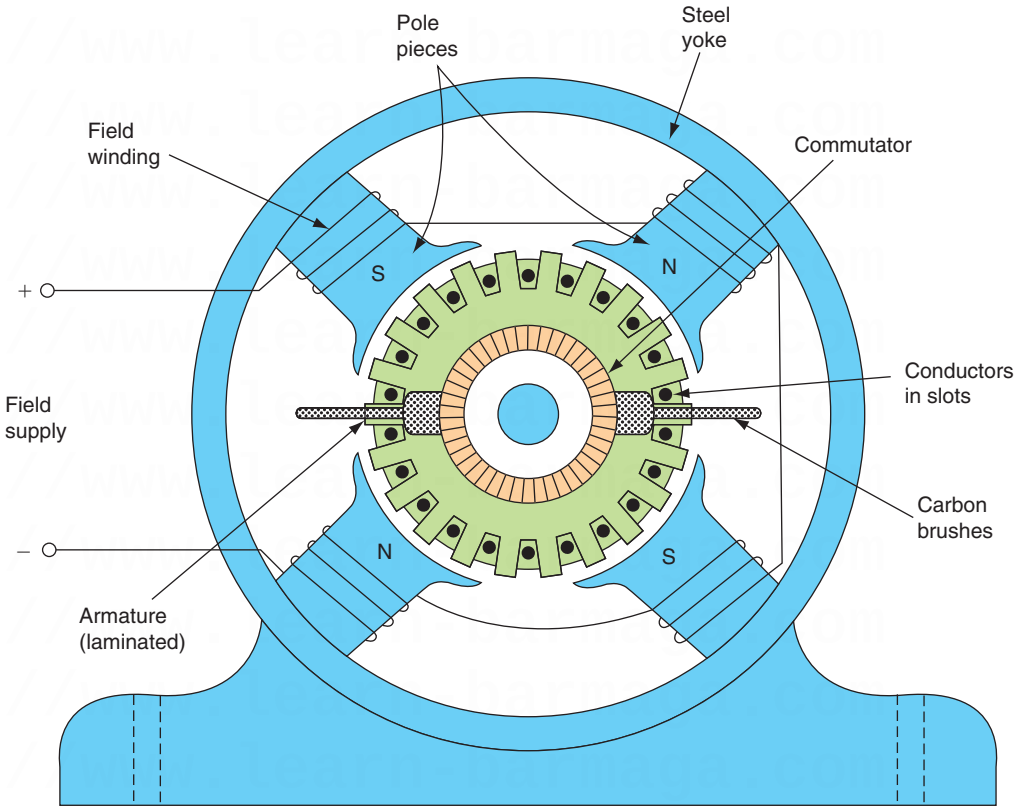

Figure 9.42 Showing d.c. machine construction.

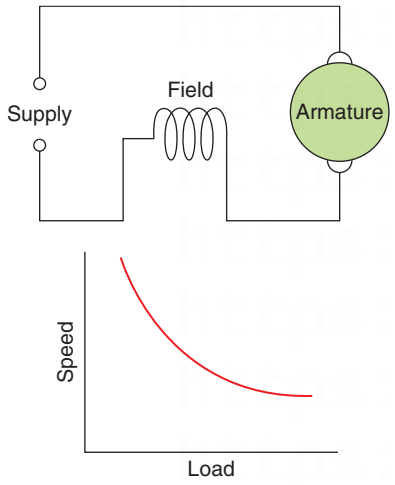

Figure 9.43 Series motor connections and characteristics.

Three-phase induction motor

When a three-phase supply is connected to insulated coils set into slots in the inner surface of the stator or stationary part of an induction motor as shown in Fig. 9.44(a), a rotating magnetic flux is produced. The rotating magnetic flux cuts the conductors of the rotor and induces an e.m.f. in the rotor conductors by Faraday's law, which states that when a conductor cuts or is cut by a magnetic field, an e.m.f. is induced in that conductor, the magnitude of which is proportional to the *rate* at which the conductor cuts or is cut by the magnetic flux. This induced e.m.f. causes rotor currents to flow and establish a magnetic flux which reacts with the stator flux and causes a force to be exerted on the rotor conductors, turning the rotor as shown in Fig. 9.44(b).

The turning force or torque experienced by the rotor is produced by inducing an e.m.f. into the rotor conductors due to the *relative* motion between the conductors and the rotating field. The torque produces rotation in the same direction as the rotating magnetic field.

Rotor construction

There are two types of induction motor rotor – the wound rotor and the cage rotor. The cage rotor consists of a laminated cylinder of silicon steel with copper or aluminium bars slotted in holes around the circumference and short circuited at each end of the cylinder as shown in Fig. 9.45. In small motors the rotor is cast in aluminium. Better starting and quieter running are achieved if the bars are slightly skewed. This type of rotor is extremely robust and since there are no

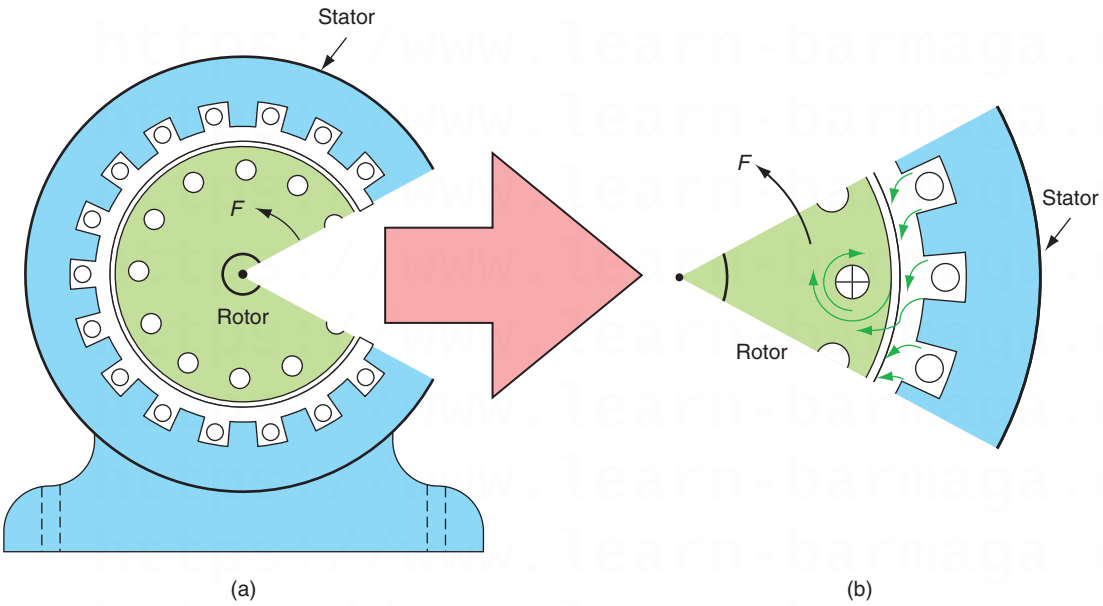

Figure 9.44 Segment taken out of an induction motor to show turning force: (a) construction of an induction motor and (b) production of torque by magnetic fields.

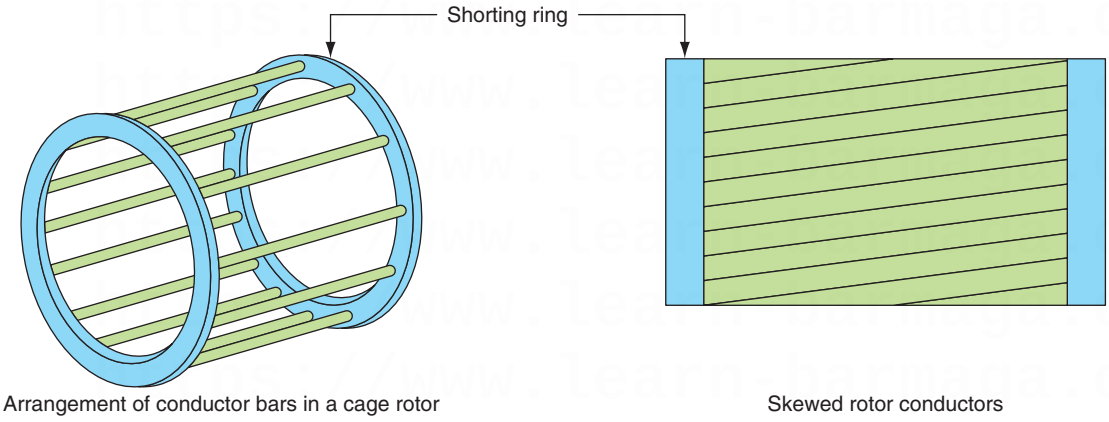

Figure 9.45 Construction of a cage rotor.

external connections there is no need for slip rings or brushes. A machine fitted with a cage rotor does suffer from a low starting torque and the machine must be chosen which has a higher starting torque than the load, as shown by curve (b) in Fig. 9.46. A machine with the characteristic shown by curve (a) in Fig. 9.46 would not start since the load torque is greater than the machine starting torque. Alternatively the load may be connected after the motor has been run up to full speed.

The wound rotor consists of a laminated cylinder of silicon steel with copper coils embedded in slots around the circumference. The windings may be connected in star or delta and the end connections brought out to slip rings mounted on the shaft. Connection by carbon brushes can then be made to an external resistance to improve starting.

The cage induction motor has a small starting torque and should be used with light loads or started with the load disconnected. The speed is almost constant. Its applications are for constant speed machines such as fans and pumps.

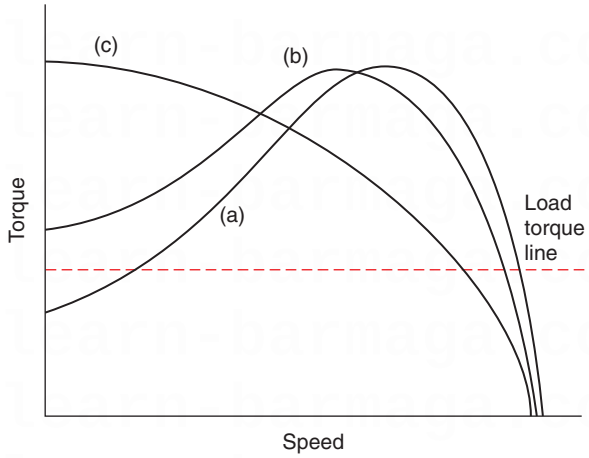

Figure 9.46 Various speed–torque characteristics for an induction motor.

Reversal of rotation is achieved by reversing any two of the stator winding connections.

Single-phase a.c. motors

A single-phase a.c. supply produces a pulsating magnetic field, not the rotating magnetic field produced by a three-phase supply. All a.c. motors require a rotating field to start. Therefore, single-phase a.c. motors have two windings which are electrically separated by about 90°. The two windings are known as the start and run windings. The magnetic fields produced by currents flowing through these out-of-phase windings create the rotating field and turning force required to start the motor. Once rotation is established, the pulsating field in the run winding is sufficient to maintain rotation and the start winding is disconnected by a centrifugal switch which operates when the motor has reached about 80% of the full load speed.

A cage rotor is used on single-phase a.c. motors, the turning force being produced in the way described previously for three-phase induction motors and shown in Fig. 9.44. Because both windings carry currents which are out of phase with each other, the motor is known as a 'split-phase' motor. The phase displacement between the currents in the windings is achieved in one of two ways:

- by connecting a capacitor in series with the start winding, as shown in Fig. 9.47(a), which gives a 90° phase difference between the currents in the start and run windings;
- by designing the start winding to have a high resistance and the run winding a high inductance, once again creating a 90° phase shift between the currents in each winding, as shown in Fig. 9.47(b).

When the motor is first switched on, the centrifugal switch is closed and the magnetic fields from the two coils produce the turning force required to run the rotor up to full speed. When the motor reaches about 80% of full speed, the centrifugal switch clicks open and the machine continues to run on the magnetic flux created by the run winding only.

Split-phase motors are constant speed machines with a low starting torque and are used on light loads such as fans, pumps, refrigerators and washing

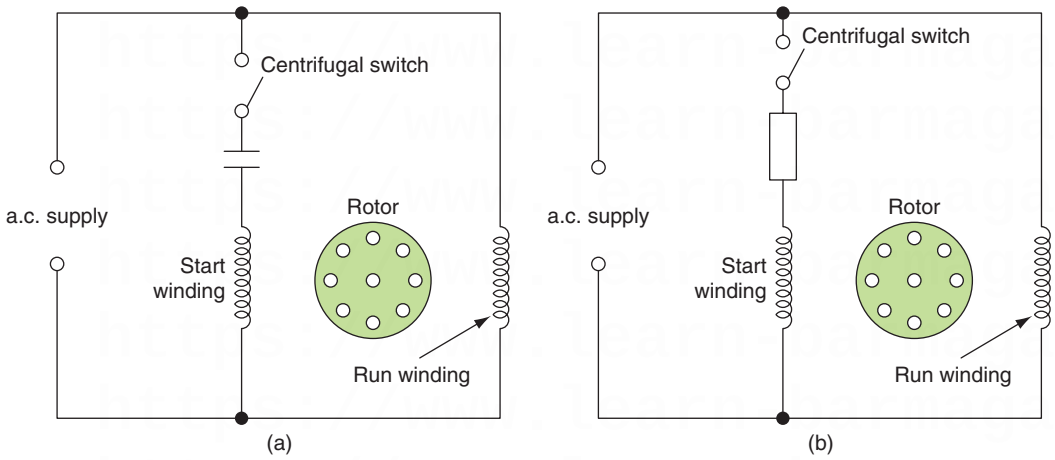

Figure 9.47 Circuit diagram of: (a) capacitor split-phase motors and (b) resistance split-phase motors.

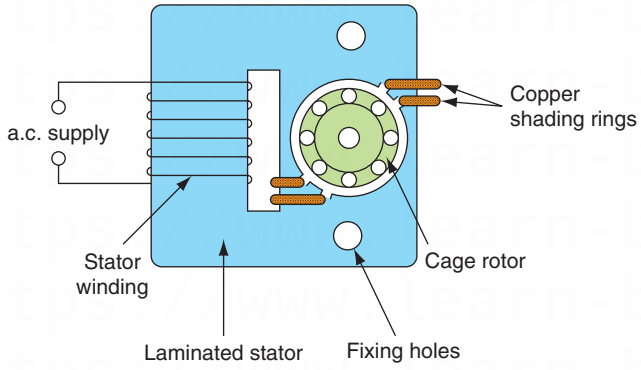

Figure 9.48 Shaded pole motor.

machines. Reversal of rotation may be achieved by reversing the connections to the start or run windings, but not both.

Shaded pole motors

The shaded pole motor is a simple, robust single-phase motor, which is suitable for very small machines with a rating of less than about 50 W. Figure 9.48 shows a shaded pole motor. It has a cage rotor and the moving field is produced by enclosing one side of each stator pole in a solid copper or brass ring, called a shading ring, which displaces the magnetic field and creates an artificial phase shift.

Shaded pole motors are constant speed machines with a very low starting torque and are used on very light loads such as oven fans, record turntable motors and electric fan heaters. Reversal of rotation is theoretically possible by moving the shading rings to the opposite side of the stator pole face. However, in practice this is often not a simple process, but the motors are symmetrical and it is sometimes easier to reverse the rotor by removing the fixing bolts and reversing the whole motor.

There are more motors operating from single-phase supplies than all other types of motor added together. Most of them operate as very small motors in domestic and business machines where single-phase supplies are most common.

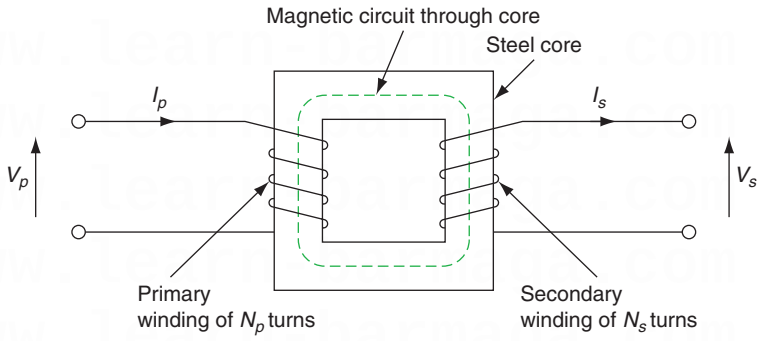

Figure 9.49 A simple transformer.

Transformers

A **transformer** is an electrical machine which is used to change the value of an alternating voltage. They vary in size from miniature units used in electronics to huge power transformers used in power stations. A transformer will only work when an alternating voltage is connected. It will not normally work from a d.c. supply such as a battery.

A transformer, as shown in Fig. 9.49, consists of two coils, called the primary and secondary coils, or windings, which are insulated from each other and wound on to the same steel or iron core.

Definition

A *transformer* is an electrical machine which is used to change the value of an alternating voltage.

An alternating voltage applied to the primary winding produces an alternating current, which sets up an alternating magnetic flux throughout the core. This magnetic flux induces an e.m.f. in the secondary winding, as described by Faraday's law, which says that when a conductor is cut by a magnetic field, an e.m.f. is induced in that conductor. Since both windings are linked by the same magnetic flux, the induced e.m.f. per turn will be the same for both windings. Therefore, the e.m.f. in both windings is proportional to the number of turns. In symbols:

$$\frac{V_p}{N_p} = \frac{V_s}{N_s}$$

where

V_p = the primary voltage
V_s = the secondary voltage
N_p = the number of primary turns
N_s = the number of secondary turns

Moving the terms around, we have a general expression for a transformer:

$$\frac{V_p}{V_s} = \frac{N_p}{N_s}$$

Try this

Maths

Using the general equation for a transformer given above, follow this maths carefully, step by step, in the following example.

Example

A 230 V to 12 V emergency lighting transformer is constructed with 800 primary turns. Calculate the number of secondary turns required. Collecting the information given in the question into a usable form, we have:

$$V_p = 230\text{ V}$$
$$V_s = 12\text{ V}$$
$$N_p = 800$$

From the general equation:

$$\frac{V_p}{V_s} = \frac{N_p}{N_s}$$

the equation for the secondary turn is:

$$N_s = \frac{N_p V_s}{V_p}$$

$$\therefore N_s = \frac{800 \times 12V}{230V} = 42 \text{ turns}$$

42 turns are required on the secondary winding of this transformer to give a secondary voltage of 12 V.

Types of transformer

Step down transformers are used to reduce the output voltage, often for safety reasons. Figure 9.50 shows a step down transformer where the primary winding has twice as many turns as the secondary winding. The turns ratio is 2:1 and, therefore, the secondary voltage is halved.

Step up transformers are used to increase the output voltage. The electricity generated in a power station is stepped up for distribution on the national grid network. Figure 9.51 shows a step up transformer where the primary winding has only half the number of turns as the secondary winding. The turns ratio is 1:2 and, therefore, the secondary voltage is doubled.

Instrument transformers are used in industry and commerce so that large currents and voltage can be measured by small electrical instruments.

A current transformer (CT) has the large load currents connected to the primary winding of the transformer and the ammeter connected to the secondary winding. The ammeter is calibrated to take account of the turns ratio of the transformer, so that the ammeter displays the actual current being taken by the load when the ammeter is actually only taking a small proportion of the load current.

A voltage transformer (VT) has the main supply voltage connected to the primary winding of the transformer and the voltmeter connected to the secondary winding. The voltmeter is calibrated to take account of the turns ratio of the transformer, so that the voltmeter displays the actual supply voltage.

Separated extra-low voltage (SELV) transformers If the primary winding and the secondary winding of a double wound transformer have a separate connection to earth, then the output of the transformer is effectively isolated from the input since the only connection between the primary and secondary windings is the magnetic

Definition

Step down transformers are used to reduce the output voltage, often for safety reasons.

Step up transformers are used to increase the output voltage. The electricity generated in a power station is stepped up for distribution on the national grid network.

Key fact

Transformers

- Transformers are very efficient (more than 80%) because they do not have any moving parts.

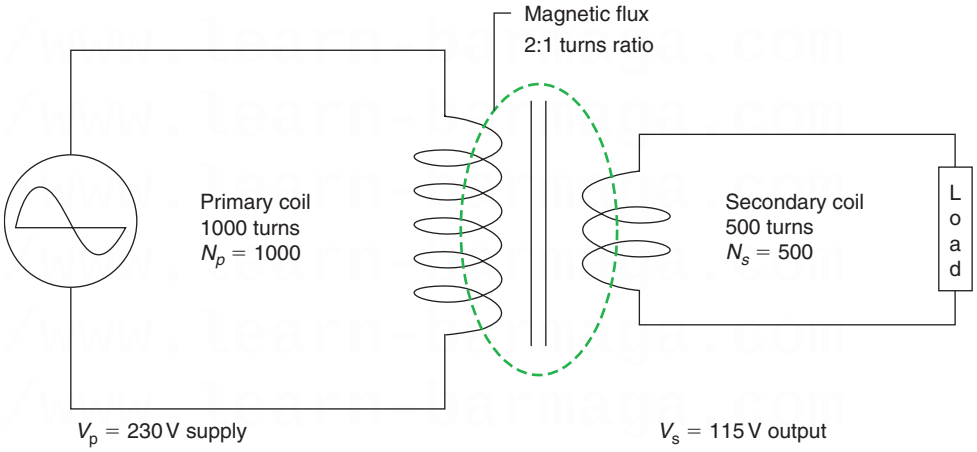

Figure 9.50 A step down transformer.

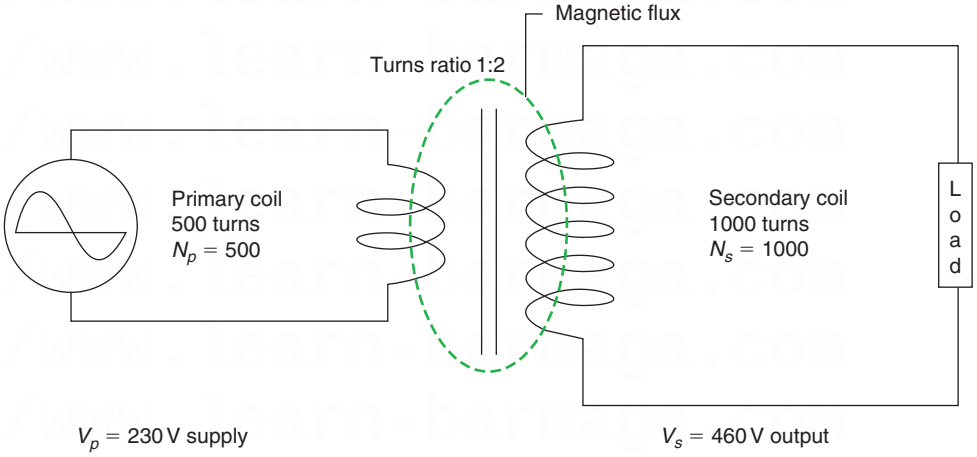

Figure 9.51 A step up transformer.

flux in the transformer core. Such a transformer would give a very safe electrical supply which might be suitable for bathroom equipment such as shaver sockets and construction site 110 V tools, providing that all other considerations are satisfied, such as water ingress, humidity, IP protection and robust construction.

Lighting and luminares

In ancient times, much of the indoor work done by humans depended upon daylight being available to light the interior and this is still the case today in many developing nations where communities live beyond the reach of the national grid. Today, life in the wealthy nations carries on after dark almost all buildings have electric lighting installed and we automatically assume that we can work indoors or out of doors at any time of the day or night, and that light will always be available.

Good lighting is important in all building interiors, helping work to be done efficiently and safely and also playing an important part in creating pleasant and comfortable surroundings.

Lighting schemes are designed using many different types of light fitting or luminaire. 'Luminaire' is the modern term given to the equipment which supports and surrounds the lamp and may control the distribution of the light. Modern

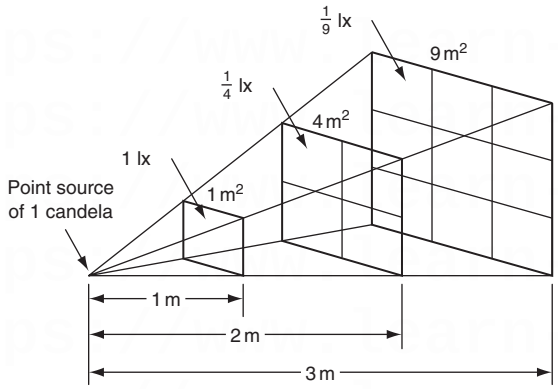

Figure 9.52 The inverse square law.

lamps use the very latest technology to provide illumination cheaply and efficiently. To begin to understand the lamps and lighting technology used today, we must first define some of the terms we will be using.

Luminous intensity – symbol *I*

This is the illuminating power of the light source to radiate luminous flux in a particular direction. The earliest term used for the unit of luminous intensity was the candle power because the early standard was the wax candle. The SI unit is the candela (pronounced candeela and abbreviated as cd).

Luminous flux – symbol *F*

This is the flow of light which is radiated from a source. The SI unit is the lumen, one lumen being the light flux which is emitted within a unit solid angle (volume of a cone) from a point source of 1 candela.

Illuminance – symbol *E*

This is a measure of the light falling on a surface, which is also called the incident radiation. The SI unit is the lux (lx) and is the illumination produced by 1 lumen over an area of 1 m^2.

Luminance – symbol *L*

Since this is a measure of the brightness of a surface it is also a measure of the light which is reflected from a surface. The objects we see vary in appearance according to the light which they emit or reflect towards the eye.

The SI units of luminance vary with the type of surface being considered. For a diffusing surface such as blotting paper or a matt white painted surface the unit of luminance is the lumen per square metre. With polished surfaces such as a silvered glass reflector, the brightness is specified in terms of the light intensity and the unit is the candela per square metre.

Illumination laws

Rays of light falling upon a surface from some distance *d* will illuminate that surface with an illuminance of say 1 lx. If the distance *d* is doubled as shown in Fig. 9.52, the illuminance of 1 lx will fall over four square units of area. Thus the illumination of a surface follows the **inverse square law**, where

$$E = \frac{I}{d^2}\,(\text{lx})$$

Definition

Thus the illumination of a surface follows the *inverse square law,* where

$$E = \frac{I}{d^2}\,(\text{lx})$$

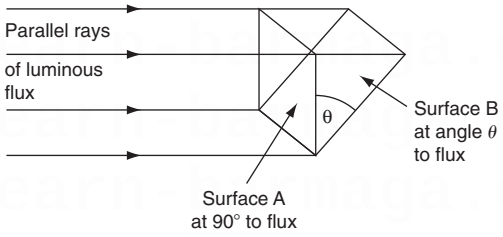

Figure 9.53 The cosine law.

Example 1

A lamp of luminous intensity 1000 cd is suspended 2 m above a laboratory bench. Calculate the illuminance directly below the lamp:

$$E = \frac{I}{d^2}\,(\text{lx})$$

$$\therefore E = \frac{1000\ \text{cd}}{(2\ \text{m})^2} = 250\ \text{lx}$$

Definition

$$E = \frac{I \cos\theta}{d^2}\,(\text{lx})$$

Since the two surfaces are joined together by the trigonometry of the cosine rules this equation is known as the ***cosine law***.

The illumination of surface A in Fig. 9.53 will follow the inverse square law described above. If this surface were removed, the same luminous flux would then fall on surface B. Since the parallel rays of light falling on the inclined surface B are spread over a larger surface area, the illuminance will be reduced by a factor θ, and therefore:

$$E = \frac{I \cos\theta}{d^2}\,(\text{lx})$$

Since the two surfaces are joined together by the trigonometry of the cosine rules this equation is known as the **cosine law**.

Example 2

A street lantern suspends a 2000 cd light source 4 m above the ground. Determine the illuminance directly below the lamp and 3 m to one side of the lamp base.

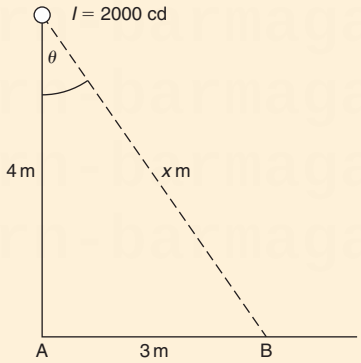

(*Continued*)

Example 2 (Continued)

The illuminance below the lamp, E_A, is:

$$E_A = \frac{I}{d^2}(\text{lx})$$

$$\therefore E_A = \frac{2000\ \text{cd}}{(4\ \text{m})^2} = 125\ \text{lx}$$

To work out the illuminance at 3 m to one side of the lantern, E_B, we need the distance between the light source and the position on the ground at B; this can be found by Pythagoras' theorem:

$$x\ (\text{m}) = \sqrt{(4\ \text{m})^2 + (3\ \text{m})^2} = \sqrt{25\ \text{m}}$$

$$x = 5\ \text{m}$$

$$\therefore E_B = \frac{I \cos\theta}{d^2}(\text{lx}) \text{ and } \cos\theta = \frac{4}{5}$$

$$\therefore E_B = \frac{2000\ \text{cd} \times 4}{(5\ \text{m})^2 \times 5} = 64\ \text{lx}$$

Example 3

A discharge lamp is suspended from a ceiling 4 m above a bench. The illuminance on the bench below the lamp was 300 lx. Find:

(a) the luminous intensity of the lamp

(b) the distance along the bench where the illuminance falls to 153.6 lx.

For (a)

$$E_A = \frac{I}{d^2}(\text{lx})$$

$$\therefore I = E_A\, d^2 (\text{cd})$$

$$I = 300\ \text{lx} \times 16\ \text{m} = 4800\ \text{cd}$$

For (b)

$$E_B = \frac{I}{d^2} \cos\theta\,(\text{lx})$$

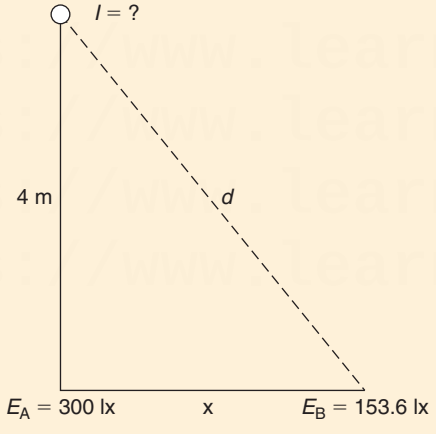

Example 3 (Continued)

$$\therefore d^2 = \frac{I \cos\theta}{E_B}\left(\text{m}^2\right)$$

$$d^2 = \frac{4800 \text{ cd}}{153.6 \text{ lx}} \times \frac{4 \text{ m}}{d \text{ m}}$$

$$d^3 = 125$$

$$\therefore \text{d} = \sqrt[3]{125} = 5 \text{ m}$$

By Pythagoras

$$x = \sqrt{5^2 - 4^2} = 3 \text{ m}$$

The recommended levels of illuminance for various types of installation are given by the IES (Illumination Engineers Society). Some examples are given in Table 9.4.

The activities being carried out in a room will determine the levels of illuminance required since different levels of illumination are required for the successful operation or completion of different tasks. The assembly of electronic components in a factory will require a higher level of illumination than, say, the assembly of engine components in a garage because the electronic components are much smaller and finer detail is required for their successful assembly.

Definition

When designing interior lighting schemes the method most frequently used depends upon a determination of the total flux required to provide a given value of illuminance at the working place. This method is generally known as the *lumen method*.

The inverse square law calculations considered earlier are only suitable for designing lighting schemes where there are no reflecting surfaces producing secondary additional illumination. This method could be used to design an outdoor lighting scheme for a cathedral, bridge or public building.

Interior luminaires produce light directly on to the working surface but additionally there is a secondary source of illumination from light reflected from the walls and ceilings. When designing interior lighting schemes the method most frequently used depends upon a determination of the total flux required to provide a given value of illuminance at the working place. This method is generally known as the **lumen method**.

The lumen method

To determine the total number of luminaires required to produce a given illuminance by the lumen method we apply the following formula:

Table 9.4 Illuminance values

Task	Working situation	Illuminance (lx)
Casual vision	Storage rooms, stairs and washrooms	100
Rough assembly	Workshops and garages	300
Reading, writing and drawing	Classrooms and offices	500
Fine assembly	Electronic component assembly	1000
Minute assembly	Watchmaking	3000

$$\text{Total number of luminaires required to provide a chosen level of illumination at a surface} = \frac{\text{Illuminance level (lx)} \times \text{Area (m}^2\text{)}}{\text{Lumen output of each luminaire (lm)} \times \text{UF} \times \text{LLF}}$$

where

- the illuminance level is chosen after consideration of the IES code,
- the area is the working area to be illuminated,
- the lumen output of each luminaire is that given in the manufacturer's specification and may be found by reference to tables such as Table 9.5,
- UF is the utilization factor,
- LLF is the light loss factor.

Utilization factor

The light flux reaching the working plane is always less than the lumen output of the lamp since some of the light is absorbed by the various surface textures. The method of calculating the utilization factor (UF) is detailed in Chartered Institution of Building Services Engineers (CIBSE) Technical Memorandum No 5, although lighting manufacturers' catalogues give factors for standard conditions. The UF is expressed as a number which is always less than unity; a typical value might be 0.9 for a modern office building.

Light loss factor

The light output of a luminaire is reduced during its life because of an accumulation of dust and dirt on the lamp and fitting. Decorations also deteriorate with time, and this results in more light flux being absorbed by the walls and ceiling.

You can see from Table 9.5 that the output lumens of the lamp decrease with time – for example, a warm white tube gives out 4950 lumens after the first 100 hours of its life but this falls to 4600 lumens after 2000 hours.

Table 9.5 Characteristics of a Thorn Lighting 1500 mm 65 W bi-pin tube

Tube colour	Initial lamp lumens*	Lighting design lumens†	Colour rendering quality	Colour appearance
Artificial daylight	2600	2100	Excellent	Cool
De luxe natural	2900	2500	Very Good	Intermediate
De luxe warm white	3500	3200	Good	Warm
Natural	3700	3400	Good	Intermediate
Daylight	4800	4450	Fair	Cool
Warm white	4950	4600	Fair	Warm
White	5100	4750	Fair	Warm
Red	250*	250	Poor	Deep red

Coloured tubes are intended for decorative purposes only
*The initial lumens are the measured lumens after 100 hours of life
†The lighting design lumens are the output lumens after 2000 hour

Burning position: Lamp may be operated in any position
Rated life: 7500 hours
Efficacy: 30–70 l m/W depending upon the tube colour

The total light loss can be considered under four headings:

1. light loss due to luminaire dirt depreciation (LDD),
2. light loss due to room dirt depreciation (RDD),
3. light loss due to lamp failure factor (LFF),
4. light loss due to lamp lumen depreciation (LLD).

The LLF is the total loss due to these four separate factors and typically has a value between 0.8 and 0.9.

When using the LLF in lumen method calculations we always use the manufacturer's initial lamp lumens for the particular lamp because the LLF takes account of the depreciation in lumen output with time. Let us now consider a calculation using the lumen method.

Example

It is proposed to illuminate an electronic workshop of dimensions $9 \times 8 \times 3$ m to an illuminance of 550 lx at the bench level. The specification calls for luminaires having one 1500 mm 65 W natural tube with an initial output of 3700 lumens (see Table 9.5). Determine the number of luminaires required for this installation when the UF and LLF are 0.9 and 0.8, respectively.

$$\text{The number of luminaires required} = \frac{E\ (\text{lx}) \times \text{area}\ (\text{m}^2)}{\text{lumens from each luminaire} \times \text{UF} \times \text{LLF}}$$

$$\text{The number of luminaires} = \frac{550\ \text{lx} \times 9\ \text{m} \times 8\ \text{m}}{3700 \times 0.9 \times 0.8} = 14.86$$

Therefore 15 luminaires will be required to illuminate this workshop to a level of 550 lx.

Definition

The performance of a lamp is quoted as a ratio of the number of lumens of light flux which it emits to the electrical energy input which it consumes. Thus *efficacy* is measured in lumens per watt; the greater the efficacy the better is the lamp's performance in converting electrical energy into light energy.

Comparison of light sources

When comparing one light source with another we are interested in the colour reproducing qualities of the lamp and the efficiency with which the lamp converts electricity into illumination. These qualities are expressed by the lamp's efficacy and colour rendering qualities.

Lamp efficacy

The performance of a lamp is quoted as a ratio of the number of lumens of light flux which it emits to the electrical energy input which it consumes. Thus **efficacy** is measured in lumens per watt; the greater the efficacy the better is the lamp's performance in converting electrical energy into light energy.

A general lighting service (GLS) lamp, for example, has an efficacy of 14 lumens per watt, while a fluorescent tube, which is much more efficient at converting electricity into light, has an efficacy of about 50 lumens per watt.

Colour rendering

We recognize various materials and surfaces as having a particular colour because luminous flux of a frequency corresponding to that colour is reflected

from the surface to our eye which is then processed by our brain. White light is made up of the combined frequencies of the colours red, orange, yellow, green, blue, indigo and violet. Colours can only be seen if the lamp supplying the illuminance is emitting light of that particular frequency. The ability to show colours faithfully as they would appear in daylight is a measure of the colour rendering property of the light source.

Lamps and luminaires

A **luminaire** is equipment which supports an electric lamp and distributes or filters the light created by the lamp. It is essentially the 'light fitting'.

A **lamp** is a device for converting electrical energy into light energy. There are many types of lamps. General lighting service (GLS) lamps and tungsten halogen lamps use a very hot wire filament to create the light and so they also become very hot in use. Fluorescent tubes operate on the 'discharge' principle; that is, the excitation of a gas within a glass tube. They are cooler in operation and very efficient in converting electricity into light. They form the basic principle of most energy efficient lamps.

Definition

A *luminaire* is equipment which supports an electric lamp and distributes or filters the light created by the lamp. A lamp is a device for converting electrical energy into light energy.

Building regulations for energy-efficient lighting

Part P of the Building Regulations 2006 relates to Electrical Safety in Dwellings. All new installations must comply with the Part P regulations and any other relevant parts of the Building Regulations. Approved document L1A and L1B Conservation of Fuel and Power 2006 is relevant to us as electricians because it says that reasonable provision shall be made to provide lighting systems with energy-efficient lamps and sufficient controls so that electrical energy can be used efficiently. Part L describes methods of compliance with these regulations for both internal and external lighting. It says:

- A reasonable number of internal lighting points should be wired that will only take energy-efficient lamps such as fluorescent tubes and compact fluorescent lamps, CFLs, which have an efficacy greater than 40 lumens/watt. They should be installed in the areas most frequently used such as hallways, landings, kitchens and sitting rooms to a number at least of:
  - One per 25 m² of dwelling floor area or
  - One per four fixed luminaires.
- External lighting fixed to the building, including lighting in porches but not lighting in garages or carports, should provide reasonable provision for energy-efficient lamps such as fluorescent tubes and CFLs. These lamps should automatically extinguish in daylight and when not required at night, by being controlled by passive infra-red (PIR) detectors.

The traditional light bulb, called a GLS (general lighting service) lamp, is hopelessly bad in energy efficiency terms, producing only 14 lumens of light output for every electrical watt input. Fluorescent tubes and CFLs produce more than 40 lumens of light output for every watt input. The government calculates that if every British household was to replace three 60 or 100 W light bulbs with CFLs, the energy saving would be greater than the power used by the entire street lighting network.

Key fact

Energy efficiency

- fluorescent lamps and CFLs (compact fluorescent lamps) are energy efficient lamps
- they give more light out for every electrical watt input.

Key fact

Energy efficiency

- Over the next few years the government will phase out GLS lamps so that we will have to use more energy efficient lamps such as compact fluorescent lamps (CFLs).

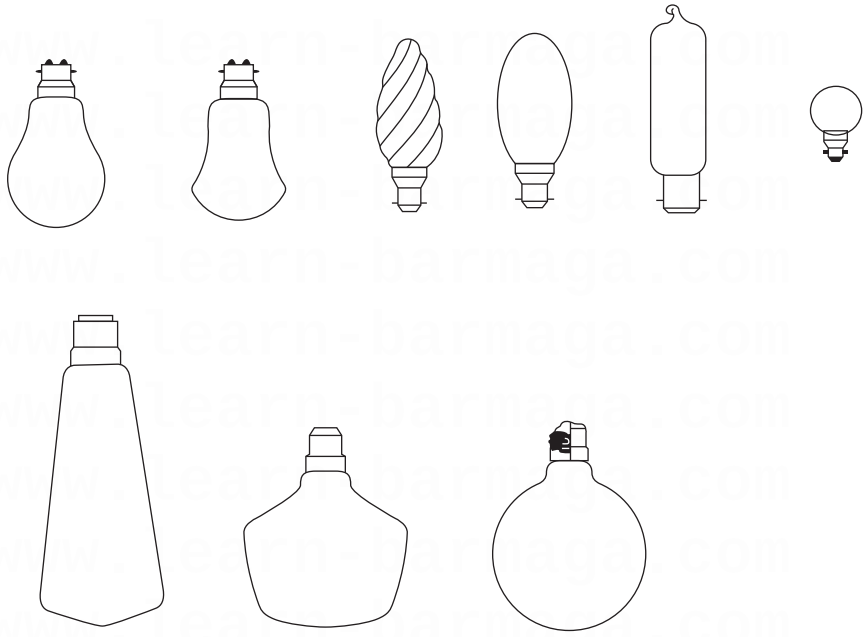

Figure 9.54 Some decorative GLS lamp shapes.

Mr Hilary Benn, the then Environment Secretary, announced that the traditional GLS light bulbs of 150, 100, 60 and 40 W would begin to be phased out by 2010. Thus, households will have to use more energy-efficient lamps in the future.

Let us now look at nine different types of lamp.

Definition

GLS lamps produce light as a result of the heating effect of an electrical current. Most of the electricity goes to producing heat and a little to producing light. A fine tungsten wire is first coiled and coiled again to form the incandescent filament of the GLS lamp.

GLS lamps

GLS lamps produce light as a result of the heating effect of an electrical current. Most of the electricity goes to producing heat and a little to producing light. A fine tungsten wire is first coiled and coiled again to form the incandescent filament of the GLS lamp. The coiled coil arrangement reduces filament cooling and increases the light output by allowing the filament to operate at a higher temperature. The light output covers the visible spectrum, giving a warm white to yellow light with a colour rendering quality classified as fairly good. The efficacy of the GLS lamp is 14 lumens per watt over its intended lifespan of 1000 h.

The filament lamp in its simplest form is a purely functional light source which is unchallenged on the domestic market despite the manufacture of more efficient lamps. One factor which may have contributed to its popularity is that lamp designers have been able to modify the glass envelope of the lamp to give a very pleasing decorative appearance, as shown by Fig. 9.54.

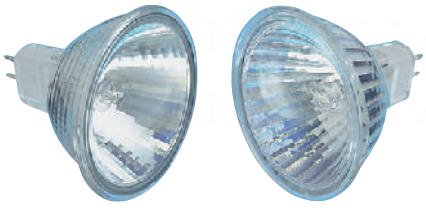

Figure 9.55 Tungsten halogen dichroic reflector lamp.

Tungsten halogen dichroic reflector miniature spot lamps

Tungsten halogen dichroic reflector miniature spot lamps such as the one shown in Fig. 9.55 are extremely popular in the lighting schemes of the new millennium. Their small size and bright white illumination makes them very popular in both commercial and domestic installations. They are available as a 12 V bi-pin package in 20, 35 and 50 W and as a 230 V bayonet type cap (called a GU10

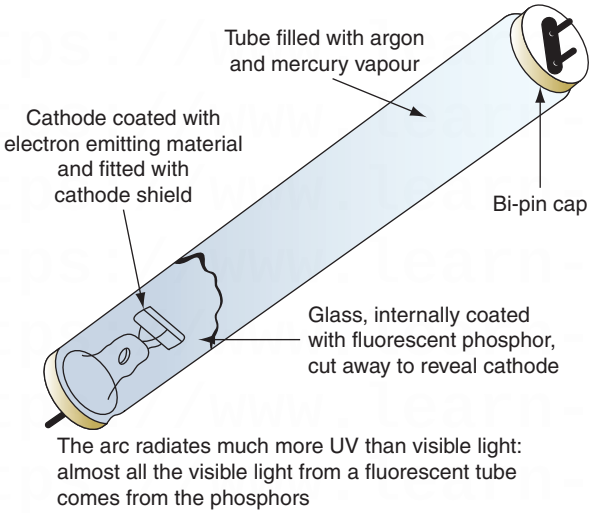

Figure 9.56 Fluorescent lamp construction.

or GZ10 cap) in 20, 35 and 50 W. At 20 lumens of light output over its intended lifespan of 2000 h they are more energy efficient than GLS lamps. However, only lamps offering more than 40 lumens of light output are considered energy efficient by the government's criteria.

Discharge lamps

Discharge lamps do not produce light by means of an incandescent filament but by the excitation of a gas or metallic vapour contained within a glass envelope. A voltage applied to two terminals or electrodes sealed into the end of a glass tube containing a gas or metallic vapour will excite the contents and produce light directly. Fluorescent tubes and CFLs operate on this principle.

Fluorescent luminaires

A **luminaire** is equipment which supports an electric lamp and distributes or filters the light created by the lamp. It is essentially the 'light fitting'.

A lamp is a device for converting electrical energy into light energy. There are many types of lamps. General lighting service (GLS) lamps and tungsten halogen lamps use a very hot wire filament to create the light and so they also become very hot in use. Fluorescent tubes operate on the 'discharge' principle; that is, the excitation of a gas within a glass tube. They are cooler in operation and very efficient in converting electricity into light. They form the basic principle of most energy efficient lamps.

Fluorescent lamps are linear arc tubes, internally coated with a fluorescent powder, containing a little low pressure mercury vapour and argon gas. The lamp construction is shown in Fig. 9.56.

Passing a current through the electrodes of the tube produces a cloud of electrons that ionize the mercury vapour and the argon in the tube, producing invisible ultraviolet light and some blue light. The fluorescent powder on the

Definition

Discharge lamps do not produce light by means of an incandescent filament but by the excitation of a gas or metallic vapour contained within a glass envelope.

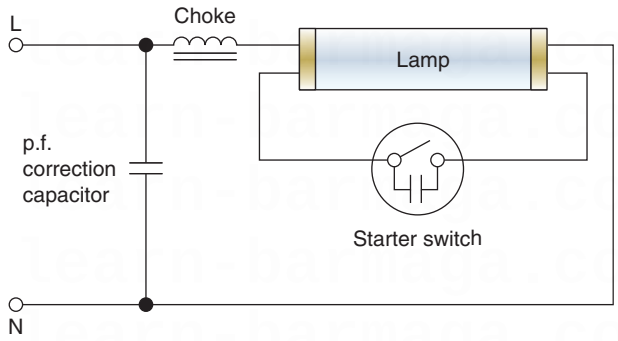

Figure 9.57 Fluorescent lamp circuit arrangement.

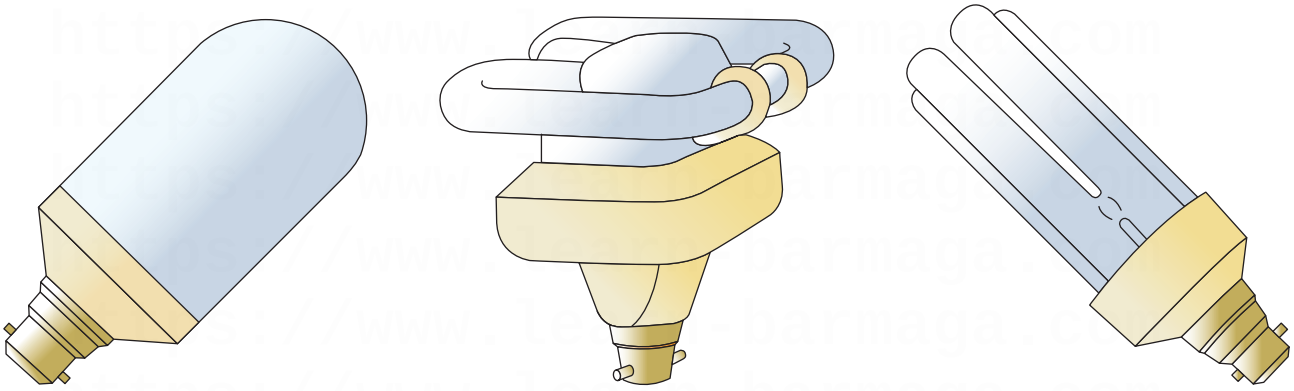

Figure 9.58 Energy-efficient lamps.

inside of the glass tube is very sensitive to ultraviolet rays and converts this radiation into visible light.

Fluorescent luminaires require a simple electrical circuit to initiate the ionization of the gas in the tube and a device to control the current once the arc is struck and the lamp is illuminated. Such a circuit is shown in Fig. 9.57.

A typical application for a fluorescent luminaire is in suspended ceiling lighting modules used in many commercial buildings. Energy efficient lamps use electricity much more efficiently.

Compact fluorescent lamps

CFLs are miniature fluorescent lamps designed to replace ordinary GLS lamps. They are available in a variety of shapes and sizes so that they can be fitted into existing light fittings. Figure 9.58 shows three typical shapes. The 'stick' type give most of their light output radially while the flat 'double D' type give most of their light output above and below.

Definition

CFLs are miniature fluorescent lamps designed to replace ordinary GLS lamps.

LED lamps

Light emitting diode (**LED**) lamps show great promise as a future star of energy saving lamps for general lighting. They are not affected by vibrations, emit a minimal amount of heat and have an efficacy of 54 lumens of light output for

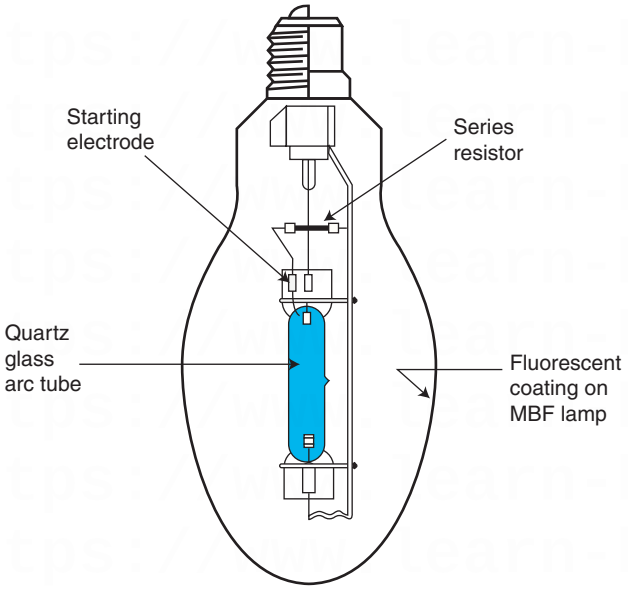

Lamp characteristics

Watts	Lighting design lumens
50	1800
80	3350
125	5550
250	12000
400	21500
700	38000
1000	54000

Burning position	Lamp may be operated in any position
Rated life	7500 hours
Efficacy	38 to 56 lm/W
Colour rendering	Fairly good–but illumination appears 'cold'

Figure 9.59 High-pressure mercury vapour lamp.

every one watt of electrical input. LEDs may also be dimmed. Their intended lifespan is 75,000 hours and when packaged as the GU10 lamp shown in Fig. 9.55, they offer a 90% energy saving against a 50 W halogen lamp.

The electrical contractor, in discussion with a customer, must balance the advantages and disadvantages of energy-efficient lamps compared to other sources of illumination for each individual installation.

High-pressure mercury vapour lamp

The high-pressure mercury discharge takes place in a quartz glass arc tube contained within an outer bulb which, in the case of the lamp classified as MBF, is internally coated with fluorescent powder. The lamp's construction and characteristics are shown in Fig. 9.59.

The inner discharge tube contains the mercury vapour and a small amount of argon gas to assist starting. The main electrodes are positioned at either end of the tube and a starting electrode is positioned close to one main electrode.

When the supply is switched on the current is insufficient to initiate a discharge between the main electrodes, but ionization does occur between the starting electrode and one main electrode in the argon gas.

This spreads through the arc tube to the other main electrode. As the lamp warms the mercury is vaporized, the pressure builds up and the lamp achieves full brilliance after about 5 to 7 minutes.

If the supply is switched off the lamp cannot be relit until the pressure in the arc tube has reduced. It may take a further 5 minutes to restrike the lamp.

The lamp is used for commercial and industrial installations, street lighting, shopping centre illumination and area floodlighting.

Metal halide lamps

Metal halide lamps are high pressure mercury vapour lamps in which metal halide chemical compounds have been added to the arc tube. This improves the colour rendering properties of the lamp making it a better artificial light source for photography.

Low-pressure sodium lamps

The low-pressure sodium discharge takes place in a U-shaped arc tube made of special glass which is resistant to sodium attack. This U-tube is encased in a tubular outer bulb of clear glass as shown in Fig. 9.60. Lamps classified as type SOX have a BC lampholder while the SL1/H lamp has a bi-pin lampholder at each end.

Since at room temperature the pressure of sodium is very low, a discharge cannot be initiated in sodium vapour alone. Therefore, the arc tube also contains neon gas to start the lamp. The arc path of the low-pressure sodium lamp is much longer than that of mercury lamps and starting is achieved by imposing a high voltage equal to about twice the main voltage across the electrodes by means of a leakage transformer. This voltage initiates a red discharge in the neon gas which heats up the sodium. The sodium vaporizes and over a period of 6 to 11 minutes the lamp reaches full brilliance, changing colour from red to bright yellow.

The lamp must be operated horizontally so that when the lamp is switched off the condensing sodium is evenly distributed around the U-tube.

The light output is yellow and has poor colour rendering properties but this is compensated by the fact that the wavelength of the light is close to that at which the human eye has its maximum sensitivity, giving the lamp a high efficacy. The main application for this lamp is street lighting where the light output meets the requirements of the Ministry of Transport.

High-pressure sodium lamp

The high-pressure sodium discharge takes place in a sintered aluminium oxide arc tube contained within a hard glass outer bulb. Until recently no suitable material was available which would withstand the extreme chemical activity of sodium at high pressure. The construction and characteristics of the high-pressure sodium lamp classified as type SON are given in Fig. 9.61.

The arc tube contains sodium and a small amount of argon or xenon to assist starting. When the lamp is switched on an electronic pulse igniter of 2 kV or more initiates a discharge in the starter gas. This heats up the sodium and in about 5 to 7 minutes the sodium vaporizes and the lamp achieves full brilliance. Both colour and efficacy improve as the pressure of the sodium rises giving a pleasant golden white colour to the light which is classified as having a fair colour rendering quality.

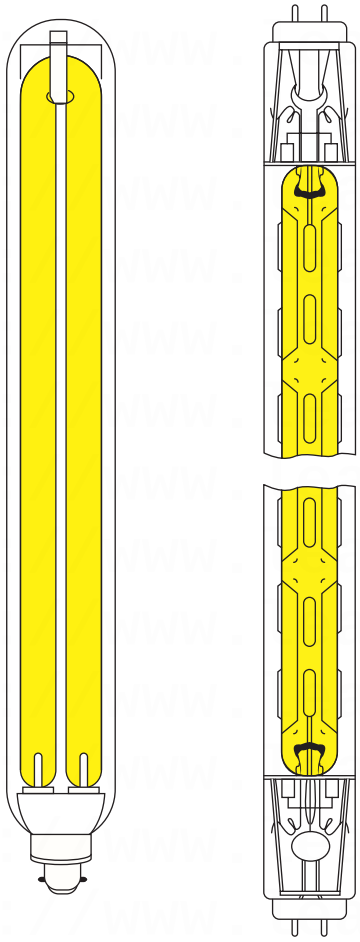

SOX lamp SLI/H lamp

Lamp characteristics

Watts	Lighting design lumens
Type SOX	
35	4300
55	7500
90	12500
135	21500
Type SLI/H	
140	20000
200	25000
200 HO	27500
Burning position	Horizontal or within 20° of the horizontal
Rated life	6000 hours
Guaranteed life	4000 hours
Efficacy	61 to 160 lm/W
Colour rendering	Very poor–illumination very yellow

Figure 9.60 Low-pressure sodium lamp.

The SON lamp is suitable for many applications. Because of the warming glow of the illuminance it is used in food halls and hotel reception areas. Also, because of the high efficacy and long lamp life it is used for high bay lighting in factories and warehouses and for area floodlighting at airports, car parks and dockyards.

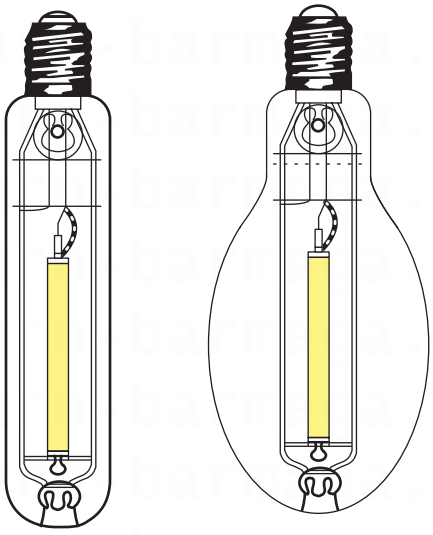

Lamp characteristics	
Watts	Lighting design lumens
Tubular clear (SON/T)	
250	21000
400	38000
Elliptical coated (SON)	
250	19500
400	36000
Burning position	Universal
Rated life	6000 hours
Guaranteed life	4000 hours
Efficacy	100 to 120 lm/W
Color rendering	Fair–illumination appears 'warm' and golden

Figure 9.61 High-pressure sodium lamp.

Water heating circuits

A small, single-point over-sink type water heater may be considered as a permanently connected appliance and so may be connected to a ring circuit through a fused connection unit. A water heater of the immersion type is usually rated at a maximum of 3 kW, and could be considered as a permanently connected appliance, fed from a fused connection unit. However, many immersion heating systems are connected into storage vessels of about 150 litres in domestic installations, and the *On Site Guide* states that immersion heaters fitted to vessels in excess of 15 litres should be supplied by their own circuit.

Therefore, immersion heaters must be wired on a separate radial circuit when they are connected to water vessels which hold more than 15 litres . Figure 9.62 shows the wiring arrangements for an immersion heater. Every switch must be a double-pole (DP) switch and out of reach of anyone using a fixed bath or shower when the immersion heater is fitted to a vessel in a bathroom.

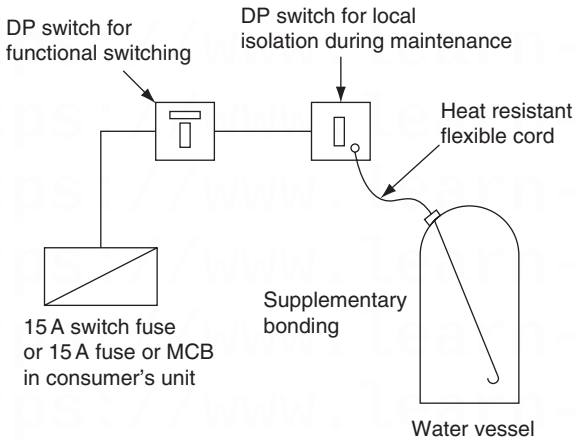

Figure 9.62 Immersion heater wiring.

Supplementary equipotential bonding to pipework *will only be required* as an addition to fault protection (IEE Regulation 415.2) if the immersion heater vessel is in a bathroom that *does not have*:

- all circuits protected by a 30 mA RCD **and**
- protective equipotential bonding (IEE Regulation 701.415.2) as shown in Fig. 4.2.

Electric space heating circuits

Electrical heating systems can be broadly divided into two categories: unrestricted local heating and off-peak heating.

Unrestricted local heating may be provided by portable electric radiators which plug into the socket outlets of the installation. Fixed heaters that are wall mounted or inset must be connected through a fused connection and incorporate a local switch, either on the heater itself or as a part of the fuse connecting unit. Heating appliances where the heating element can be touched must have a DP switch which disconnects all conductors. This requirement includes radiators which have an element inside a silica-glass sheath.

Off-peak heating systems may provide central heating from storage radiators, ducted warm air or underfloor heating elements. All three systems use the thermal storage principle, whereby a large mass of heat-retaining material is heated during the off-peak period and allowed to emit the stored heat throughout the day. The final circuits of all off-peak heating installations must be fed from a separate supply controlled by an electricity board time clock.

When calculating the size of cable required to supply a single-storage radiator, it is good practice to assume a current demand equal to 3.4 kW at each point. This will allow the radiator to be changed at a future time with the minimum disturbance to the installation. Each radiator must have a 20 A DP means of isolation adjacent to the heater and the final connection should be via a flex outlet. See Fig. 9.63 for wiring arrangements.

Ducted warm air systems have a centrally sited thermal storage heater with a high storage capacity. The unit is charged during the off-peak period, and a fan drives the stored heat in the form of warm air through large air ducts to outlet grilles in the various rooms. The wiring arrangements for this type of heating are shown in Fig. 9.64.

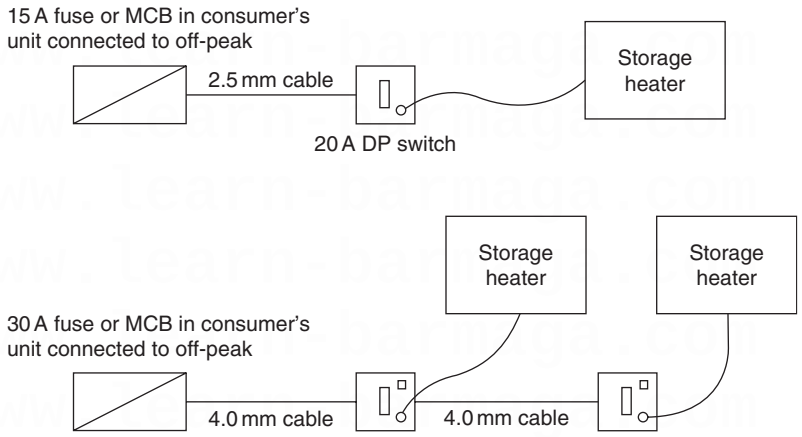

Figure 9.63 Possible wiring arrangements for storage heaters.

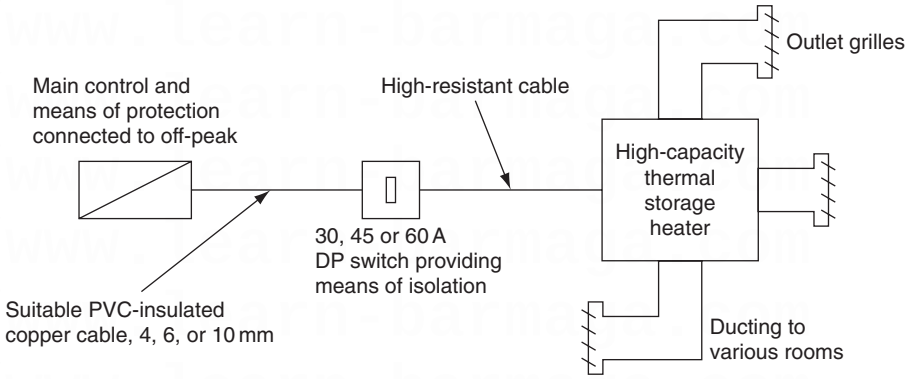

Figure 9.64 Ducted warm air heating system.

The single-storage heater is heated by an electric element embedded in bricks and rated between 6 and 15 kW depending upon its thermal capacity. A radiator of this capacity must be supplied on its own circuit, in cable capable of carrying the maximum current demand and protected by a fuse or miniature circuit breaker (MCB) of 30, 45 or 60 A as appropriate. At the heater position, a DP switch must be installed to terminate the fixed heater wiring. The flexible cables used for the final connection to the heaters must be of the heat-resistant type.

Floor warming installations use the thermal storage properties of concrete. Special cables are embedded in the concrete floor screed during construction. When current is passed through the cables they become heated, the concrete absorbs this heat and radiates it into the room. The wiring arrangements are shown in Fig. 9.65. Once heated, the concrete will give off heat for a long time after the supply is switched off and is, therefore, suitable for connection to an off-peak supply.

Underfloor heating cables installed in bathrooms or shower rooms must incorporate an earthed metallic sheath or be covered by an earthed metallic grid connected to the protective conductor of the supply circuit (IEE Regulation 701.753).

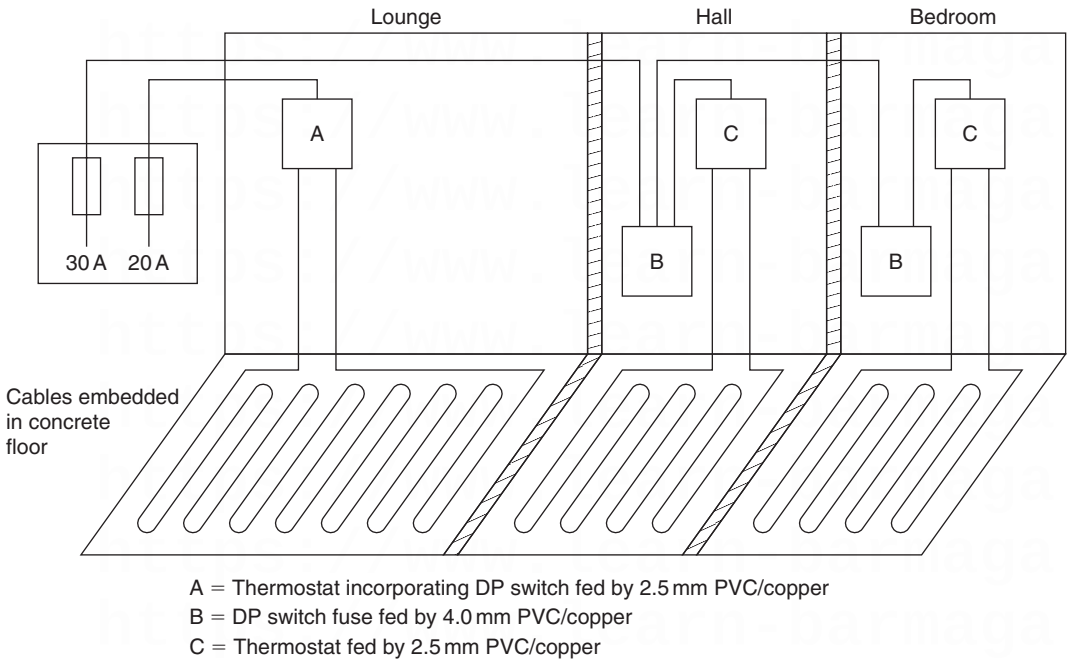

Figure 9.65 Floor warming installations.

Cooker circuit

A cooker with a rating above 3 kW must be supplied on its own circuit but since it is unlikely that in normal use every heating element will be switched on at the same time, a diversity factor may be applied in calculating the cable size, as detailed in the *On Site Guide.*

Consider, as an example, a cooker with the following elements fed from a cooker control unit incorporating a 13 A socket:

$$\begin{aligned} 4 \times 2\text{ kW fast boiling rings} &= 8000\text{ W} \\ 1 \times 2\text{ kW grill} &= 2000\text{ W} \\ 1 \times 2\text{ kW oven} &= 2000\text{ W} \\ \text{Total loading} &= 12\,000\text{ W} \end{aligned}$$

When connected to 230 V

$$\text{Current rating} = \frac{12000}{230} = 52.17\text{ A}$$

Applying the diversity factor of Table 1A

$$\begin{aligned} \text{Total current rating} &= 52.17\text{ A} \\ \text{First 10 amperes} &= 10\text{ A} \\ 30\%\text{ of }42.17\text{A} &= 12.65\text{ A} \\ \text{Socket outlet} &= 5\text{ A} \\ \text{Assessed current demand} &= 10 + 12.65 + 5 = 27.65\text{ A} \end{aligned}$$

Therefore, a cable capable of carrying 27.65 A may be used safely rather than a 52.17 A cable.

A cooking appliance must be controlled by a switch separate from the cooker but in a readily accessible position. Where two cooking appliances are installed

in one room, such as split-level cookers, one switch may be used to control both appliances provided that neither appliance is more than 2 m from the switch (*On Site Guide*, Appendix 8).

Basic electronics

There are numerous types of electronic component – diodes, transistors, thyristors and integrated circuits (ICs) – each with its own limitations, characteristics and designed application. When repairing electronic circuits it is important to replace a damaged component with an identical or equivalent component. Manufacturers issue comprehensive catalogues with details of working voltage, current, power dissipation, etc., and the reference numbers of equivalent components, and some of this information is included in the Appendices. These catalogues of information, together with a high-impedance multimeter should form a part of the extended tool-kit for anyone in the electrotechnical industries proposing to repair electronic circuits.

Electronic circuit symbols

The British Standard BS EN 60617 recommends that particular graphical symbols should be used to represent a range of electronic components on circuit diagrams. The same British Standard recommends a range of symbols suitable for electrical installation circuits with which electricians will already be familiar. Figure 9.66 shows a selection of electronic symbols.

Resistors

Definition

All materials have some resistance to the flow of an electric current but, in general, the term *resistor* describes a conductor specially chosen for its resistive properties.

All materials have some resistance to the flow of an electric current but, in general, the term **resistor** describes a conductor specially chosen for its resistive properties.

Resistors are the most commonly used electronic component and they are made in a variety of ways to suit the particular type of application. They are usually manufactured as either carbon composition or carbon film. In both cases the base resistive material is carbon and the general appearance is of a small cylinder with leads protruding from each end, as shown in Fig. 9.67(a).

If subjected to overload, carbon resistors usually decrease in resistance since carbon has a negative temperature coefficient. This causes more current to flow through the resistor, so that the temperature rises and failure occurs, usually by fracturing. Carbon resistors have a power rating between 0.1 and 2 W, which should not be exceeded.

When a resistor of a larger power rating is required a wire-wound resistor should be chosen. This consists of a resistance wire of known value wound on a small ceramic cylinder which is encapsulated in a vitreous enamel coating, as shown in Fig. 9.67(b). Wire-wound resistors are designed to run hot and have a power rating up to 20 W. Care should be taken when mounting wire-wound resistors to prevent the high operating temperature affecting any surrounding components.

A variable resistor is one which can be varied continuously from a very low value to the full rated resistance. This characteristic is required in tuning circuits to adjust the signal or voltage level for brightness, volume or tone. The most common type used in electronic work has a circular carbon track contacted by

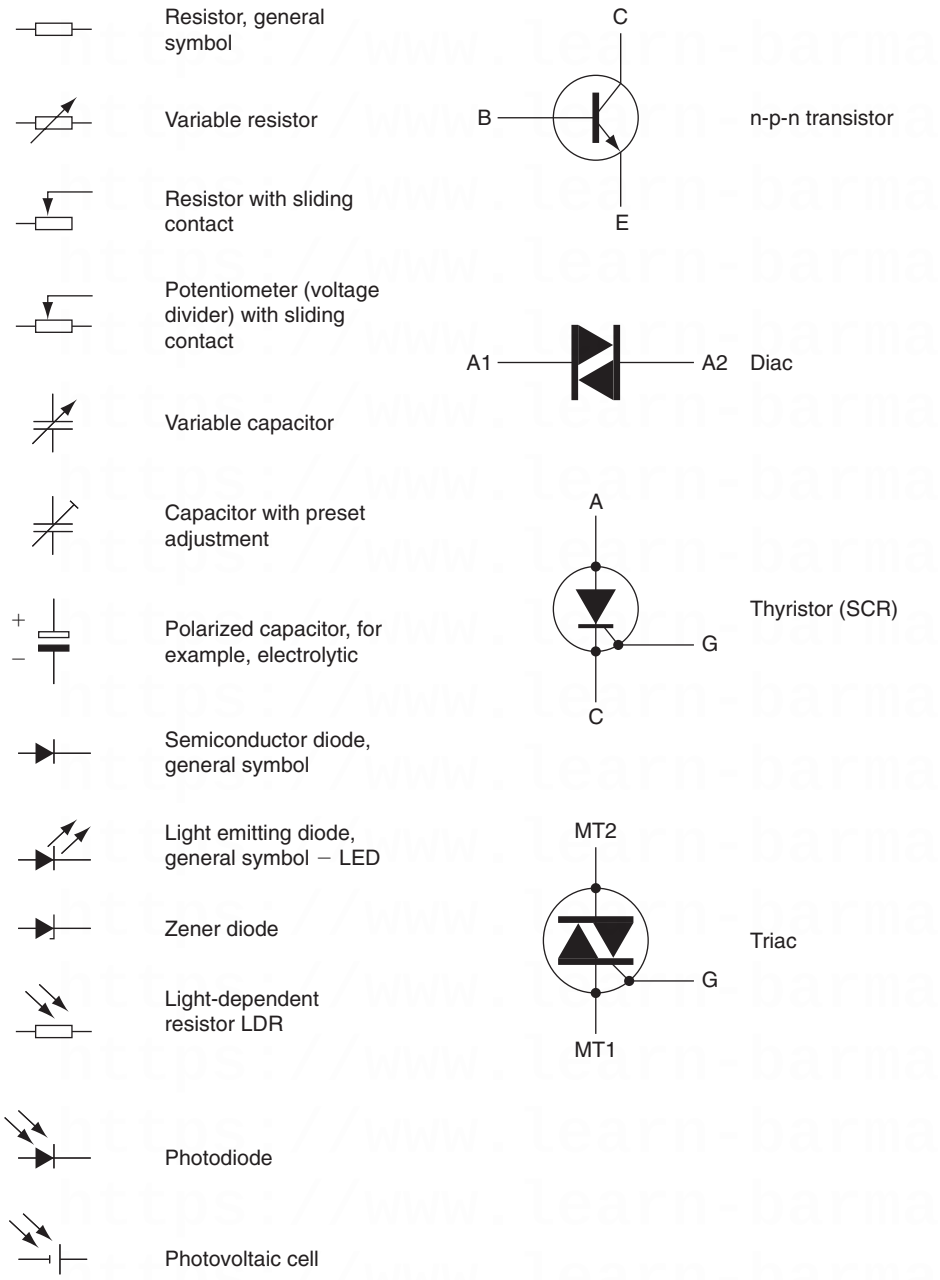

Figure 9.66 Some BS EN 60617 graphical symbols used in electronics.

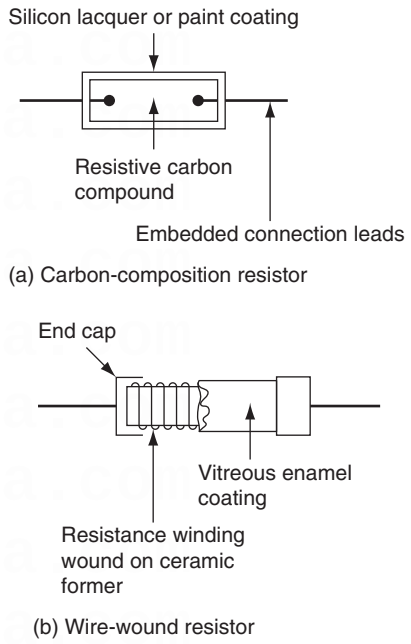

Figure 9.67 Construction of resistors.

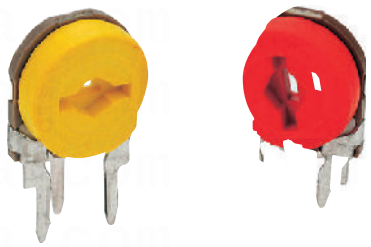

Figure 9.68 Types of variable resistor.

a metal wiper arm. The wiper arm can be adjusted by means of an adjusting shaft (rotary type) or by placing a screwdriver in a slot (preset type), as shown in Fig. 9.68. Variable resistors are also known as potentiometers because they can be used to adjust the potential difference (voltage) in a circuit. The variation in resistance can be either a logarithmic or a linear scale.

The value of the resistor and the tolerance may be marked on the body of the component either by direct numerical indication or by using a standard colour code. The method used will depend upon the type, physical size and manufacturer's preference, but in general the larger components have values marked directly on the body and the smaller components use the standard resistor colour code.

Abbreviations used in electronics

Where the numerical value of a component includes a decimal point, it is standard practice to include the prefix for the multiplication factor in place of the decimal point, to avoid accidental marks being mistaken for decimal points. Multiplication factors and prefixes are dealt with in Chapter 9.

The abbreviation	R means × 1
	k means × 1000
	M means × 1,000,000

Therefore, a 4.7 kΩ resistor would be abbreviated to 4 k7, a 5.6 Ω resistor to 5R6 and a 6.8 MΩ resistor to 6 M8.

Tolerances may be indicated by adding a letter at the end of the printed code.

The abbreviation F means ±1%, G means ±2%, J means ±5%, K means ±10% and M means ±20%. Therefore a 4.7 kΩ resistor with a tolerance of 2% would be abbreviated to 4 k7G. A 5.6 Ω resistor with a tolerance of 5% would be abbreviated to 5R6J. A 6.8 MΩ resistor with a 10% tolerance would be abbreviated to 6 M8 K.

This is the British Standard BS 1852 code which is recommended for indicating the values of resistors on circuit diagrams and components when their physical size permits.

The standard colour code

Small resistors are marked with a series of coloured bands, as shown in Table 9.6. These are read according to the standard colour code to determine the resistance.

Table 9.6 The resistor colour code

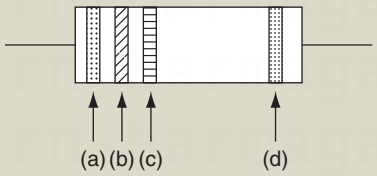

Colour	Band (a) first number	Band (b) second number	Band (c) number of zeros	Band (d) tolerance band (%)
Black	0	0	None	–
Brown	1	1	1	1
Red	2	2	2	2
Orange	3	3	3	–
Yellow	4	4	4	–
Green	5	5	5	–
Blue	6	6	6	–
Violet	7	7	7	–
Grey	8	8	–	–
White	9	9	–	–
Gold	–	–	÷10	5
Silver	–	–	÷100	10
None	–	–	–	20

The bands are located on the component towards one end. If the resistor is turned so that this end is towards the left, the bands are then read from left to right. Band (a) gives the first number of the component value, band (b) the second number, band (c) the number of zeros to be added after the first two numbers and band (d) the resistor tolerance. If the bands are not clearly oriented towards one end, first identify the tolerance band and turn the resistor so that this is towards the right before commencing to read the colour code as described.

The tolerance band indicates the maximum tolerance variation in the declared value of resistance. Thus a 100 Ω resistor with a 5% tolerance will have a value somewhere between 95 and 105 Ω, since 5% of 100 Ω is 5 Ω.

Example 1

A resistor is colour coded yellow, violet, red, gold. Determine the value of the resistor.

Band (a) – yellow has a value of 4
Band (b) – violet has a value of 7
Band (c) – red has a value of 2
Band (d) – gold indicates a tolerance of 5%
The value is therefore 4700 ± 5%
This could be written as 4.7 kΩ ± 5% or 4k7J.

Example 2

A resistor is colour coded green, blue, brown, silver. Determine the value of the resistor.

Band (a) – green has a value of 5
Band (b) – blue has a value of 6
Band (c) – brown has a value of 1
Band (d) – silver indicates a tolerance of 10%

The value is therefore 560 ± 10% and could be written as 560 Ω ± 10% or 560 RK.

Example 3

A resistor is colour coded blue, grey, green, gold. Determine the value of the resistor.

Band (a) – blue has a value of 6
Band (b) – grey has a value of 8
Band (c) – green has a value of 5
Band (d) – gold indicates a tolerance of 5%

The value is therefore 6,800,000 ± 5% and could be written as 6.8 M Ω ± 5% or 6M8J.

Example 4

A resistor is colour coded orange, white, silver, silver. Determine the value of the resistor.

Band (a) – orange has a value of 3
Band (b) – white has a value of 9
Band (c) – silver indicates divide by 100 in this band
Band (d) – silver indicates a tolerance of 10%

The value is therefore 0.39 ± 10% and could be written as 0.39 Ω ± 10% or R39 K.

Try this

Electronics

Electricians are increasingly coming across electronic components and equipment. Make a list in the margin of some of the electronic components that you have come across at work.

Preferred values

It is difficult to manufacture small electronic resistors to exact values by mass production methods. This is not a disadvantage as in most electronic circuits the value of the resistors is not critical. Manufacturers produce a limited range of *preferred* resistance values rather than an overwhelming number of individual resistance values. Therefore, in electronics, we use the preferred value closest to the actual value required.

A resistor with a preferred value of 100 Ω and a 10% tolerance could have any value between 90 and 110 Ω. The next larger preferred value which would give the maximum possible range of resistance values without too much overlap would be 120 Ω. This could have any value between 108 and 132 Ω. Therefore, these two preferred value resistors cover all possible resistance values between 90 and 132 Ω. The next preferred value would be 150 Ω, then 180, 220 Ω and so on.

There is a series of preferred values for each tolerance level, as shown in Table 9.7, so that every possible numerical value is covered. Table 9.7 indicates the values between 10 and 100, but larger values can be obtained by multiplying these preferred values by some multiplication factor. Resistance values of 47 Ω, 470 Ω, 4.7 kΩ, 470 kΩ, 4.7 MΩ, etc., are available in this way.

Testing resistors

The resistor being tested should have a value close to the preferred value and within the tolerance stated by the manufacturer. To measure the resistance of a resistor which is not connected into a circuit, the leads of a suitable ohmmeter should be connected to each resistor connection lead and a reading obtained.

If the resistor to be tested is connected into an electronic circuit it is *always necessary* to disconnect one lead from the circuit before the test leads are connected, otherwise the components in the circuit will provide parallel paths, and an incorrect reading will result.

Table 9.7 Preferred values

E6 series 20% tolerance	E12 series 10% tolerance	E24 series 5% tolerance
10	10	10
		11
	12	12
		13
15	15	15
		16
	18	18
		20
22	22	22
		24
	27	27
		30
33	33	33
		36
	39	39
		43
47	47	47
		51
	56	56
		62
68	68	68
		75
	82	82
		91

Capacitors

In this section we shall consider the practical aspects associated with capacitors in electronic circuits.

A capacitor stores a small amount of electric charge; it can be thought of as a small rechargeable battery which can be quickly recharged. In electronics we are not only concerned with the amount of charge stored by the capacitor but in the way the value of the capacitor determines the performance of timers and oscillators by varying the time constant of a simple capacitor–resistor circuit.

Capacitors in action

If a test circuit is assembled as shown in Fig. 9.69 and the changeover switch connected to d.c. the signal lamp will only illuminate for a very short pulse as the

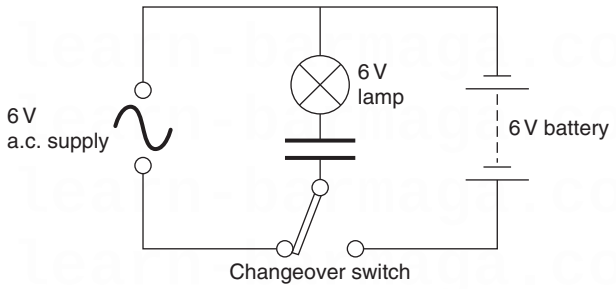

Figure 9.69 Test circuit showing capacitors in action.

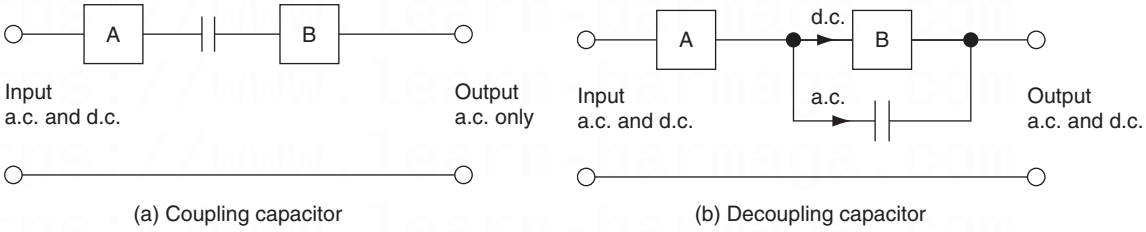

Figure 9.70 (a) Coupling and (b) decoupling capacitors.

capacitor charges. The charged capacitor then blocks any further d.c. current flow. If the changeover switch is then connected to a.c. the lamp will illuminate at full brilliance because the capacitor will charge and discharge continuously at the supply frequency. Current is *apparently* flowing through the capacitor because electrons are moving to and fro in the wires joining the capacitor plates to the a.c. supply.

Coupling and decoupling capacitors

Capacitors can be used to separate a.c. and d.c. in an electronic circuit. If the output from circuit A, shown in Fig. 9.70(a), contains both a.c. and d.c. but only an a.c. input is required for circuit B then a *coupling* capacitor is connected between them. This blocks the d.c. while offering a low reactance to the a.c. component. Alternatively, if it is required that only d.c. be connected to circuit B, shown in Fig. 9.70(b), a *decoupling* capacitor can be connected in parallel with circuit B. This will provide a low reactance path for the a.c. component of the supply and only d.c. will be presented to the input of B. This technique is used to *filter out* unwanted a.c. in, for example, d.c. power supplies.

Types of capacitor

There are two broad categories of capacitor, the non-polarized and polarized type. The non-polarized type can be connected either way round, but polarized capacitors *must* be connected to the polarity indicated otherwise a short circuit and consequent destruction of the capacitor will result. There are many different types of capacitor, each one being distinguished by the type of dielectric used in its construction. Fig. 9.71 shows some of the capacitors used in electronics.

Polyester capacitors

Polyester capacitors are an example of the plastic film capacitor. Polypropylene, polycarbonate and polystyrene capacitors are other types of plastic film capacitor. The capacitor value may be marked on the plastic film, or the capacitor colour code given in Table 9.8 may be used. This dielectric material gives a compact capacitor with good electrical and temperature characteristics. They are used in many electronic circuits, but are not suitable for high-frequency use.

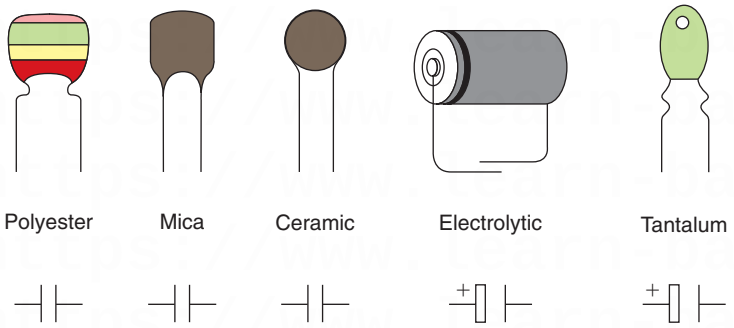

Figure 9.71 Capacitors and their symbols used in electronic circuits.

Table 9.8 Colour code for plastic film capacitors (values in picofarads)

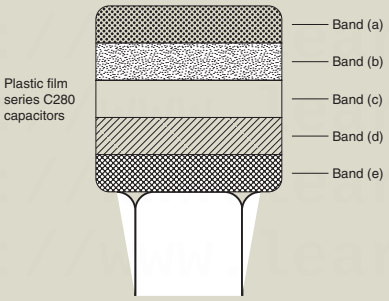

Colour	Band (a) first number	Band (b) second number	Band (c) number of zeros to be added	Band (d) tolerance (%)	Band (e) maximum voltage (V)
Black	–	0	None	20	–
Brown	1	1	1	–	100
Red	2	2	2	–	250
Orange	3	3	3	–	–
Yellow	4	4	4	–	400
Green	5	5	5	5	–
Blue	6	6	6	–	–
Violet	7	7	7	–	–
Grey	8	8	8	–	–
White	9	9	9	10	–

Mica capacitors

Mica capacitors have excellent stability and are accurate to ±1% of the marked value. Since costs usually increase with increased accuracy, they tend to be more expensive than plastic film capacitors. They are used where high stability is required, for example in tuned circuits and filters.

Ceramic capacitors

Ceramic capacitors are mainly used in high-frequency circuits subjected to wide temperature variations. They have high stability and low loss.

Electrolytic capacitors

Electrolytic capacitors are used where a large value of capacitance coupled with a small physical size is required. They are constructed on the 'Swiss roll' principle as are the paper dielectric capacitors used for power-factor correction in electrical installation circuits. The electrolytic capacitors' high capacitance for very small volume is derived from the extreme thinness of the dielectric coupled with a high dielectric strength. Electrolytic capacitors have a size gain of approximately 100 times over the equivalent non-electrolytic type. Their main disadvantage is that they are polarized and must be connected to the correct polarity in a circuit. Their large capacity makes them ideal as smoothing capacitors in power supplies.

Tantalum capacitors

Tantalum capacitors are a new type of electrolytic capacitor using tantalum and tantalum oxide to give a further capacitance/size advantage. They look like a 'raindrop' or 'blob' with two leads protruding from the bottom. The polarity and values may be marked on the capacitor, or a colour code may be used. The voltage ratings available tend to be low, as with all electrolytic capacitors. They are also extremely vulnerable to reverse voltages in excess of 0.3 V. This means that even when testing with an ohmmeter, extreme care must be taken to ensure correct polarity.

Variable capacitors

Variable capacitors are constructed so that one set of metal plates moves relative to another set of fixed metal plates as shown in Fig. 9.72. The plates are separated by air or sheet mica, which acts as a dielectric. Air dielectric variable capacitors are used to tune radio receivers to a chosen station, and small variable capacitors called *trimmers* or *presets* are used to make fine, infrequent adjustments to the capacitance of a circuit.

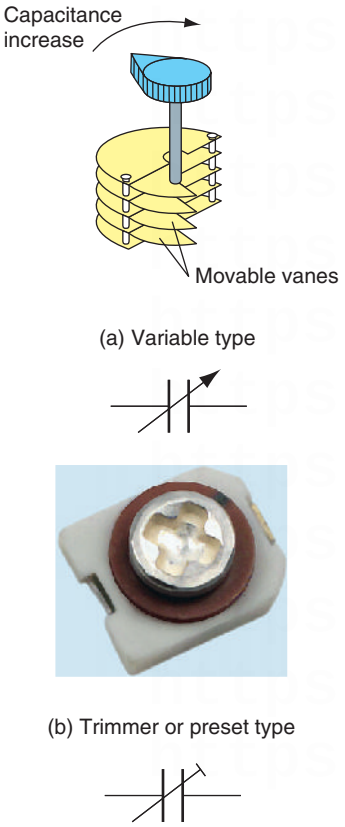

Figure 9.72 Variable capacitors and their symbols: (a) variable type; (b) trimmer or preset type.

Selecting a capacitor

When choosing a capacitor for a particular application, three factors must be considered: value, working voltage and leakage current.

The unit of capacitance is the *farad* (symbol F), to commemorate the name of the English scientist Michael Faraday. However, for practical purposes the farad is much too large and in electrical installation work and electronics we use fractions of a farad as follows:

$$1 \text{ microfarad} = 1\,\mu\text{F} = 1 \times 10^{-6}\ \text{F}$$
$$1 \text{ nanofarad} = 1\,\text{nF} = 1 \times 10^{-9}\ \text{F}$$
$$1 \text{ picofarad} = 1\,\text{pF} = 1 \times 10^{-12}\ \text{F}$$

The power-factor correction capacitor used in a domestic fluorescent luminaire would typically have a value of 8 μF at a working voltage of 400 V. In an electronic filter circuit a typical capacitor value might be 100 pF at 63 V.

One microfarad is one million times greater than one picofarad. It may be useful to remember that:

$$1000\ \text{pF} = 1\,\text{nF}$$
$$1000\ \text{nF} = 1\,\mu\text{F}$$

The working voltage of a capacitor is the *maximum* voltage that can be applied between the plates of the capacitor without breaking down the dielectric insulating material. This is a d.c. rating and, therefore, a capacitor with a 200 V rating must only be connected across a maximum of 200 V d.c. Since a.c. voltages are usually given as r.m.s. values, a 200 V a.c. supply would have a maximum value of about 283 V, which would damage the 200 V capacitor. When connecting a capacitor to the 230 V mains supply we must choose a working voltage of about 400 V because 230 V r.m.s. is approximately 325 V maximum. The 'factor of safety' is small and, therefore, the working voltage of the capacitor must not be exceeded.

An ideal capacitor which is isolated will remain charged forever, but in practice no dielectric insulating material is perfect, and the charge will slowly *leak* between the plates, gradually discharging the capacitor. The loss of charge by leakage through it should be very small for a practical capacitor.

Capacitor colour code

The actual value of a capacitor can be identified by using the colour codes given in Table 9.8 in the same way that the resistor colour code was applied to resistors.

Example 1

A plastic film capacitor is colour coded, from top to bottom, brown, black, yellow, black, red. Determine the value of the capacitor, its tolerance and working voltage.

From Table 9.8 we obtain the following:

Band (a) – brown has a value 1
Band (b) – black has a value 0
Band (c) – yellow indicates multiply by 10,000
Band (d) – black indicates 20%
Band (e) – red indicates 250 V

The capacitor has a value of 1,00,000 pF or 0.1 μF with a tolerance of 20% and a maximum working voltage of 250 V.

Example 2

Determine the value, tolerance and working voltage of a polyester capacitor colour-coded, from top to bottom, yellow, violet, yellow, white, yellow.

From Table 9.8 we obtain the following:

Band (a) – yellow has a value 4
Band (b) – violet has a value 7
Band (c) – yellow indicates multiply by 10,000
Band (d) – white indicates 10%
Band (e) – yellow indicates 400 V

The capacitor has a value of 4,70,000 pF or 0.47 μF with a tolerance of 10% and a maximum working voltage of 400 V.

Example 3

A plastic film capacitor has the following coloured bands from its top down to the connecting leads: blue, grey, orange, black, brown. Determine the value, tolerance and voltage of this capacitor.

From Table 9.8 we obtain the following:

Band (a) – blue has a value 6
Band (b) – grey has a value 8
Band (c) – orange indicates multiply by 1000
Band (d) – black indicates 20%
Band (e) – brown indicates 100 V

The capacitor has a value of 68,000 pF or 68 nF with a tolerance of 20% and a maximum working voltage of 100 V.

Capacitance value codes

Where the numerical value of the capacitor includes a decimal point, it is standard practice to use the prefix for the multiplication factor in place of the decimal point. This is the same practice as we used earlier for resistors.

The abbreviation μ means microfarad, n means nanofarad and p means picofarad. Therefore, a 1.8 pF capacitor would be abbreviated to 1 p8, a 10 pF capacitor to 10 p, a 150 pF capacitor to 150 p or n15, a 2200 pF capacitor to 2n2 and a 10,000 pF capacitor to 10 n.

$$1000\,\text{pF} = 1\text{nF} = 0.001\,\mu\text{F}$$

Packaging electronic components

When we talk about packaging electronic components we are not referring to the parcel or box which contains the components for storage and delivery, but to the type of encapsulation in which the tiny semiconductor material is contained. Figure 9.73 shows three different package outlines for just one type of discrete component, the transistor. Identification of the pin connections for different packages is given within the text as each separate or discrete component is considered, particularly later in this chapter when we discuss semiconductor

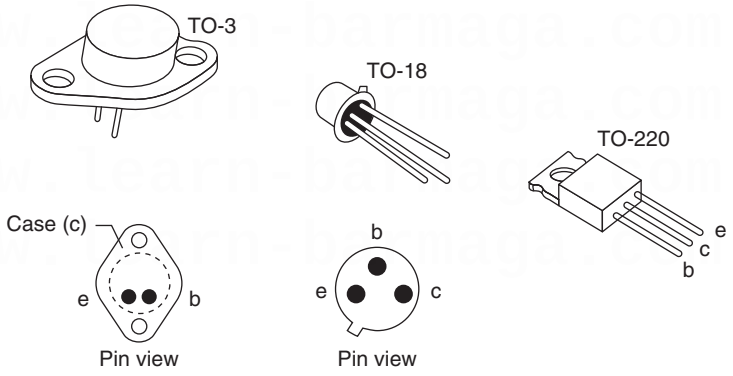

Figure 9.73 Three different package outlines for transistors.

devices. However, the Appendices aim to draw together all the information on pin connections and packages for easy reference.

Obtaining information and components

Electricians use electrical wholesalers and suppliers to purchase electrical cable, equipment and accessories. Similar facilities are available in most towns and cities for the purchase of electronic components and equipment. There are also a number of national suppliers who employ representatives who will call at your workshop to offer technical advice and take your order. Some of these national companies also offer a 24-hour telephone order and mail order service. Their full-colour, fully illustrated catalogues also contain an enormous amount of technical information. The names and addresses of these national companies are given in Appendix A. For local suppliers you must consult your local phone book and *Yellow Pages*. The Appendices of this book also contain some technical reference information.

Semiconductor materials

Modern electronic devices use the semiconductor properties of materials such as silicon or germanium. The atoms of pure silicon or germanium are arranged in a lattice structure, as shown in Fig. 9.74. The outer electron orbits contain four electrons known as *valence* electrons. These electrons are all linked to other valence electrons from adjacent atoms, forming a covalent bond. There are no free electrons in pure silicon or germanium and, therefore, no conduction can take place unless the bonds are broken and the lattice framework is destroyed.

To make conduction possible without destroying the crystal it is necessary to replace a four-valent atom with a three- or five-valent atom. This process is known as *doping*.

If a three-valent atom is added to silicon or germanium a hole is left in the lattice framework. Since the material has lost a negative charge, the material becomes positive and is known as a p-type material (p for positive).

If a five-valent atom is added to silicon or germanium, only four of the valence electrons can form a bond and one electron becomes mobile or free to carry charge. Since the material has gained a negative charge it is known as an n-type material (n for negative).

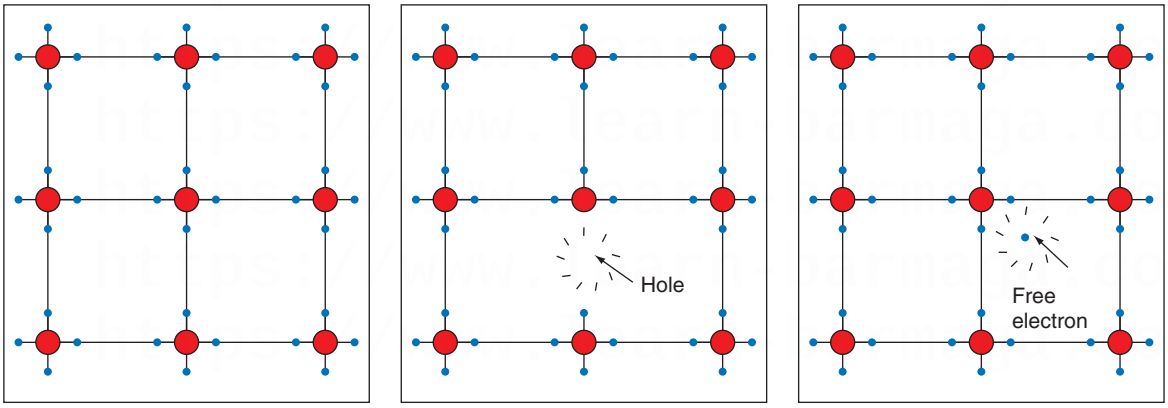

Pure silicon or germanium

Doped silicon or germanium
p-type material

Doped silicon or germanium
n-type material

Figure 9.74 Semiconductor material.

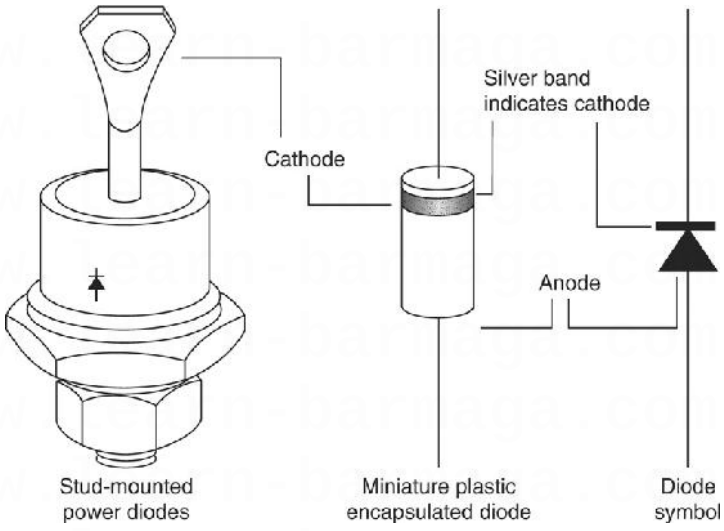

Figure 9.75 Symbol for and appearance of semiconductor diodes.

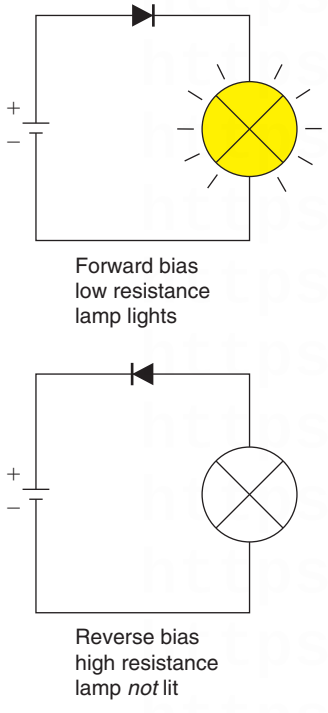

Figure 9.76 Forward and reverse bias of a diode.

Bringing together a p-type and n-type material allows current to flow in one direction only through the p–n junction. Such a junction is called a diode, since it is the semiconductor equivalent of the vacuum diode valve used by Fleming to rectify radio signals in 1904.

Semiconductor diode

A semiconductor or junction diode consists of a p-type and n-type material formed in the same piece of silicon or germanium. The p-type material forms the anode and the n-type the cathode, as shown in Fig. 9.75. If the anode is made positive with respect to the cathode, the junction will have very little resistance and current will flow. This is referred to as forward bias. However, if reverse bias is applied, that is, the anode is made negative with respect to the cathode, the junction resistance is high and no current can flow, as shown in Fig. 9.76. The characteristics for a forward and reverse bias p–n junction are given in Fig. 9.77.

It can be seen that a small voltage is required to forward bias the junction before a current can flow. This is approximately 0.6 V for silicon and 0.2 V for germanium. The reverse bias potential of silicon is about 1200 V and for germanium about 30 V. If the reverse bias voltage is exceeded the diode will break down and current will flow in both directions. Similarly, the diode will break down if the current rating is exceeded, because excessive heat will be generated. Manufacturers' information therefore gives maximum voltage and current ratings for individual diodes which must not be exceeded. However, it is possible to connect a number of standard diodes in series or parallel, thereby sharing current or voltage, as shown in Fig. 9.78, so that the manufacturers' maximum values are not exceeded by the circuit.

Diode testing

The p–n junction of the diode has a low resistance in one direction and a very high resistance in the reverse direction.

Connecting an ohmmeter, with the red positive lead to the anode of the junction diode and the black negative lead to the cathode, would give a very low reading. Reversing the lead connections would give a high resistance reading in a 'good' component.

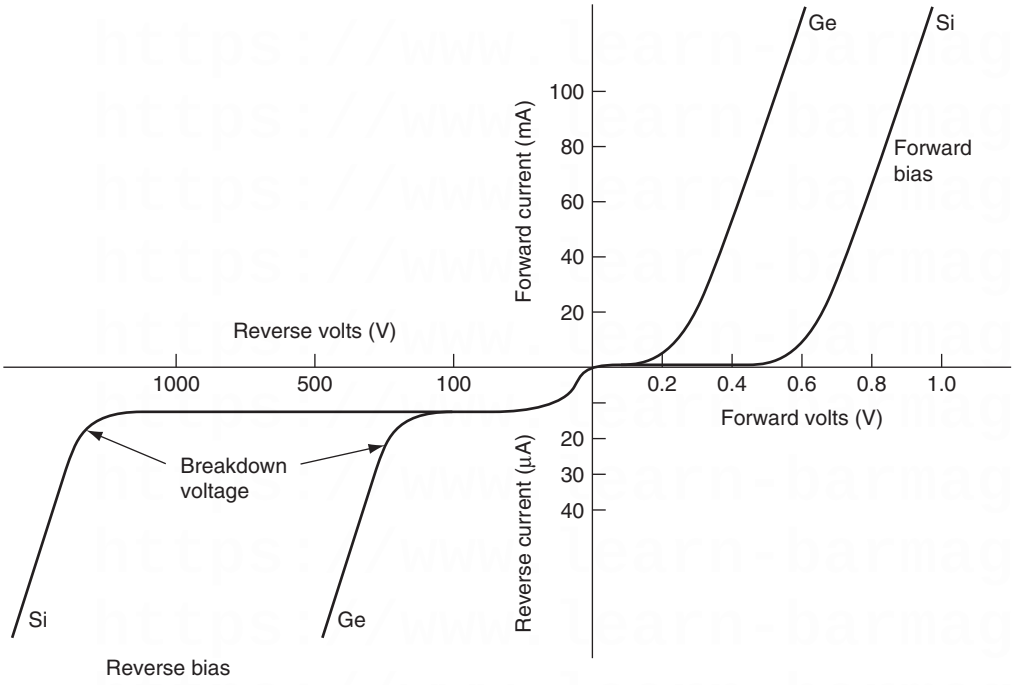

Figure 9.77 Forward and reverse bias characteristic of silicon and germanium.

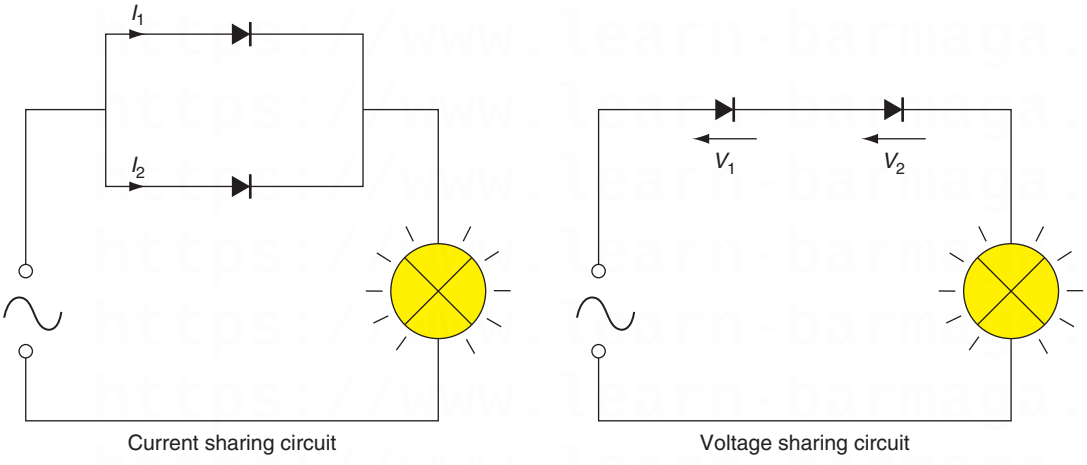

Figure 9.78 Using two diodes to reduce the current or voltage applied to a diode.

Zener diode

A Zener diode is a silicon junction diode but with a different characteristic than the semiconductor diode considered previously. It is a special diode with a predetermined reverse breakdown voltage, the mechanism for which was discovered by Carl Zener in 1934. Its symbol and general appearance are shown in Fig. 9.79. In its forward bias mode, that is, when the anode is positive and the cathode negative, the Zener diode will conduct at about 0.6 V, just like an ordinary diode, but it is in the reverse mode that the Zener diode is normally used. When connected with the anode made negative and the cathode positive, the reverse current is zero until the reverse voltage reaches a predetermined value, when the diode switches on, as shown by the characteristics given in Fig. 9.80. This is called the Zener voltage or reference voltage. Zener diodes are manufactured in a range of preferred values, for example, 2.7, 4.7, 5.1, 6.2, 6.8,

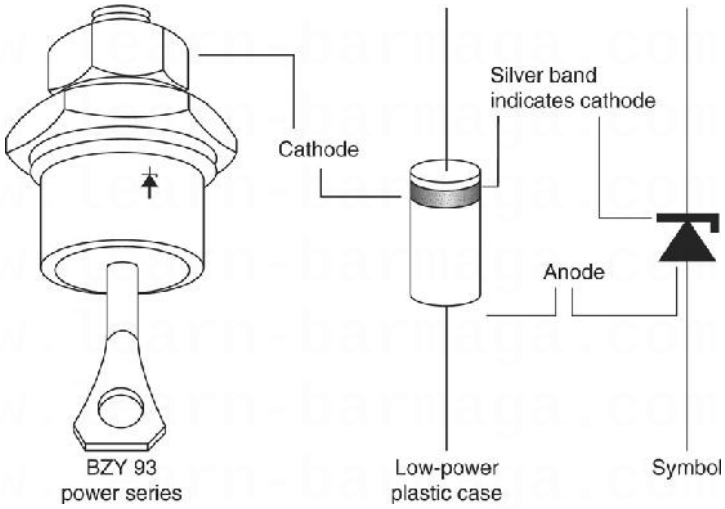

Figure 9.79 Symbol for and appearance of Zener diodes.

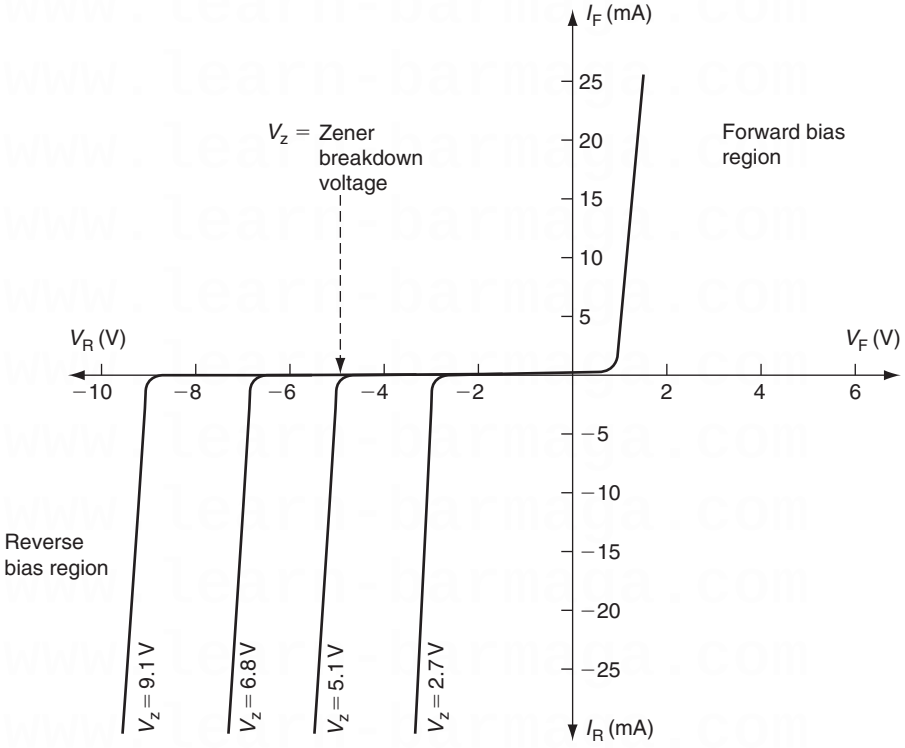

Figure 9.80 Zener diode characteristics.

9.1, 10, 11, 12 V, etc., up to 200 V at various ratings. The diode may be damaged by overheating if the current is not limited by a series resistor, but when this is connected, the voltage across the diode remains constant. It is this property of the Zener diode which makes it useful for stabilizing power supplies and these circuits are considered in Fig. 9.110.

If a test circuit is constructed as shown in Fig. 9.81, the Zener action can be observed. When the supply is less than the Zener voltage (5.1 V in this case) no current will flow and the output voltage will be equal to the input voltage. When the supply is equal to or greater than the Zener voltage, the diode will conduct and any excess voltage will appear across the 680 Ω resistor, resulting in a very

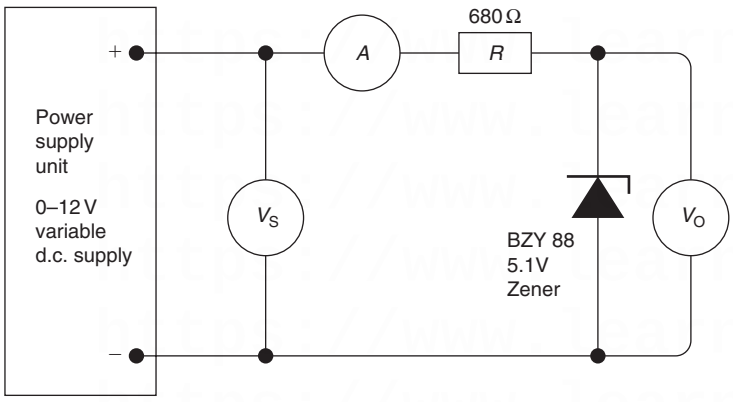

P.S.U. supply volts (V_S)	Current (A)	Output volts (V_O)
1		
2		
3		
4		
5		
6		
7		
8		
9		
10		
11		
12		

Figure 9.81 Experiment to demonstrate the operation of a Zener diode.

stable voltage at the output. When connecting this and other electronic circuits you must take care to connect the polarity of the Zener diode as shown in the diagram. Note that current must flow through the diode to enable it to stabilize.

Light-emitting diode

The light-emitting diode (LED) is a p–n junction especially manufactured from a semiconducting material which emits light when a current of about 10 mA flows through the junction.

No light is emitted when the junction is reverse biased and if this exceeds about 5 V the LED may be damaged.

The general appearance and circuit symbol are shown in Fig. 9.82.

The LED will emit light if the voltage across it is about 2 V. If a voltage greater than 2 V is to be used then a resistor must be connected in series with the LED.

To calculate the value of the series resistor we must ask ourselves what we know about LEDs. We know that the diode requires a forward voltage of about 2 V and a current of about 10 mA must flow through the junction to give sufficient light. The value of the series resistor R will, therefore, be given by:

$$R = \frac{\text{Supply voltage} - 2\,\text{V}}{10\,\text{mA}}\ \Omega$$

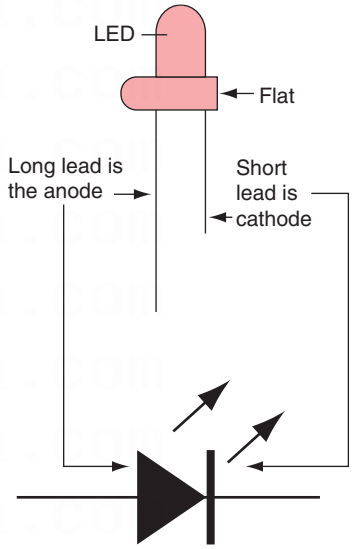

Figure 9.82 Symbol for and general appearance of an LED.

Example

Calculate the value of the series resistor required when an LED is to be used to show the presence of a 12 V supply.

$$R = \frac{12\,\text{V} - 2\,\text{V}}{10\,\text{mA}}\ \Omega$$

$$R = \frac{10\,\text{V}}{10\,\text{mA}} = 1\,\text{k}\Omega$$

The circuit is, therefore, as shown in Fig. 9.83.

LEDs are available in red, yellow and green and, when used with a series resistor, may replace a filament lamp. They use less current than a filament lamp, are smaller, do not become hot and last indefinitely. A filament lamp, however, is brighter and emits white light. LEDs are often used as indicator lamps, to indicate the presence of a voltage. They do not, however, indicate the *precise* amount of voltage present at that point.

Try this

LEDs

Make a list in the margin of examples where you have seen LEDs being used.

Another application of the LED is the seven-segment display used as a numerical indicator in calculators, digital watches and measuring instruments. Seven LEDs are arranged as a figure 8 so that when various segments are illuminated, the numbers 0–9 are displayed as shown in Fig. 9.84.

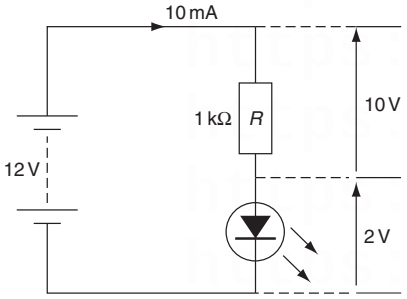

Figure 9.83 Circuit diagram for LED example.

Light-dependent resistor

Almost all materials change their resistance with a change in temperature. Light energy falling on a suitable semiconductor material also causes a change in resistance. The semiconductor material of a light-dependent resistor (LDR) is encapsulated as shown in Fig. 9.85 together with the circuit symbol. The resistance of an LDR in total darkness is about 10 MΩ, in normal room lighting about 5 kΩ and in bright sunlight about 100 Ω. They can carry tens of milliamperes, an amount which is sufficient to operate a relay. The LDR uses this characteristic to switch on automatically street lighting and security alarms.

Figure 9.84 LED used in seven-segment display.

Figure 9.85 Symbol and appearance of an LDR.

Photodiode

The photodiode is a normal junction diode with a transparent window through which light can enter. The circuit symbol and general appearance are shown in Fig. 9.86. It is operated in reverse bias mode and the leakage current increases in proportion to the amount of light falling on the junction. This is due to the light energy breaking bonds in the crystal lattice of the semiconductor material to produce holes and electrons.

Photodiodes will only carry microamperes of current but can operate much more quickly than LDRs and are used as 'fast' counters when the light intensity is changing rapidly.

Thermistor

The thermistor is a thermal resistor, a semiconductor device whose resisance varies with temperature. Its circuit symbol and general appearance are shown in Fig. 9.87. They can be supplied in many shapes and are used for the measurement and control of temperature up to their maximum useful temperature limit of about 300°C. They are very sensitive and because the bead of semiconductor material can be made very small, they can measure temperature in the most inaccessible places with very fast response times. Thermistors are embedded in high-voltage underground transmission cables in order to monitor the temperature of the cable. Information about the temperature of a cable allows engineers to load the cables more efficiently. A particular cable can carry a larger load in winter for example, when heat from the cable is being dissipated more efficiently. A thermistor is also used to monitor the water temperature of a motor car.

Transistors

The transistor has become the most important building block in electronics. It is the modern, miniature, semiconductor equivalent of the thermionic valve and was invented in 1947 by Bardeen, Shockley and Brattain at the Bell Telephone Laboratories in the United States. Transistors are packaged as separate or *discrete* components, as shown in Fig. 9.88.

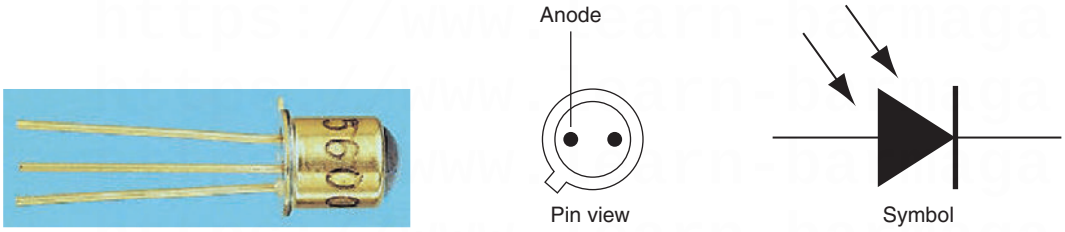

Figure 9.86 Symbol for pin connections and appearance of a photodiode.

Figure 9.87 Symbol for and appearance of a thermistor.

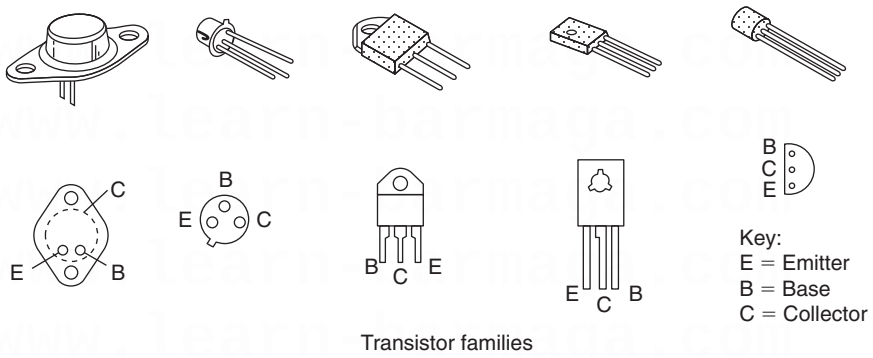

Figure 9.88 The appearance and pin connections of the transistor family.

There are two basic types of transistor, the *bipolar* or junction transistor and the *field-effect* transistor (FET).

The FET has some characteristics which make it a better choice in electronic switches and amplifiers. It uses less power and has a higher resistance and frequency response. It takes up less space than a bipolar transistor and, therefore, more of them can be packed together on a given area of silicon chip. It is, therefore, the FET which is used when many transistors are integrated on to a small area of silicon chip as in the IC that will be discussed later.

When packaged as a discrete component the FET looks much the same as the bipolar transistor. Its circuit symbol and connections are given in the Appendix. However, it is the bipolar transistor which is much more widely used in electronic circuits as a discrete component.

The bipolar transistor

The bipolar transistor consists of three pieces of semiconductor material sandwiched together as shown in Fig. 9.89. The structure of this transistor makes it a three-terminal device having a base, collector and emitter terminal. By varying the current flowing into the base connection a much larger current flowing between collector and emitter can be controlled. Apart from the supply connections, the n-p-n and p-n-p types are essentially the same but the n-p-n type is more common.

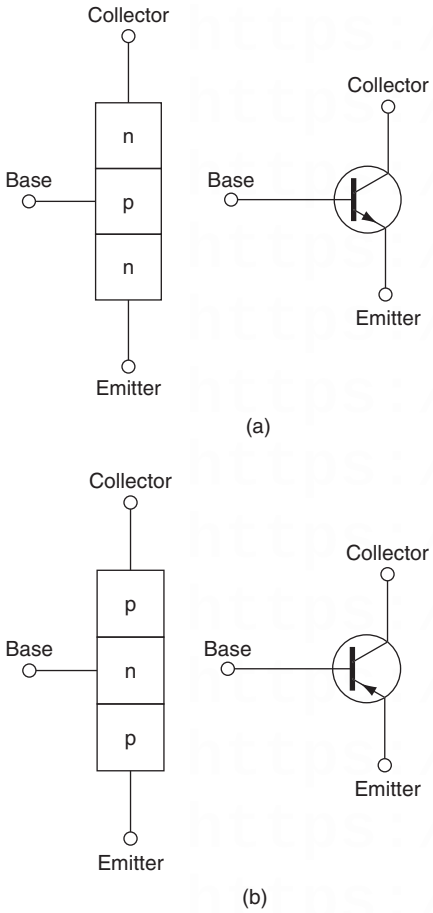

Figure 9.89 Structure of and symbol for (a) n-p-n and (b) p-n-p transistors.

A transistor is generally considered a current-operated device. There are two possible current paths through the transistor circuit, shown in Fig. 9.90: the base–emitter path when the switch is closed; and the collector–emitter path. Initially, the positive battery supply is connected to the n-type material of the collector, the junction is reverse biased and, therefore, no current will flow. Closing the switch will forward bias the base–emitter junction and current flowing through this junction causes current to flow across the collector–emitter junction and the signal lamp will light.

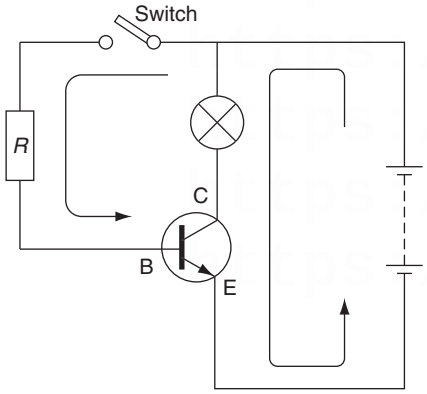

Figure 9.90 Operation of the transistor.

A small base current can cause a much larger collector current to flow. This is called the *current gain* of the transistor, and is typically about 100. When I say a much larger collector current, I mean a large current in electronic terms, up to about half an ampere.

We can, therefore, regard the transistor as operating in two ways: as a switch because the base current turns on and controls the collector current; and as a current amplifier because the collector current is greater than the base current.

Table 9.9 Transistor testing using an ohmmeter

A 'good' n-p-n transistor will give the following readings:
Red to base and black to collector = low resistance
Red to base and black to emitter = low resistance
Reversed connections on the above terminals will result in a high resistance reading, as will connections of either polarity between the collector and emitter terminals
A 'good' p-n-p transistor will give the following readings:
Black to base and red to collector = low resistance
Black to base and red to emitter = low resistance
Reversed connections on the above terminals will result in a high resistance reading, as will connections of either polarity between the collector and emitter terminals

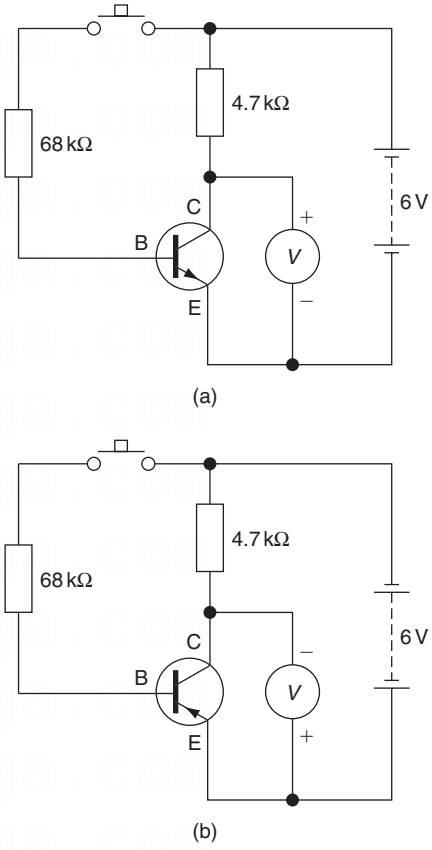

Figure 9.91 Transistor test circuits (a) n-p-n transistor test; (b) p-n-p transistor test.

We could also consider the transistor to be operating in a similar way to a relay. However, transistors have many advantages over electrically operated switches such as relays. They are very small, reliable, have no moving parts and, in particular, they can switch millions of times a second without arcing occurring at the contacts.

Transistor testing

A transistor can be thought of as two diodes connected together and, therefore, a transistor can be tested using an ohmmeter in the same way as was described for the diode.

Assuming that the red lead of the ohmmeter is positive, the transistor can be tested in accordance with Table 9.9.

When many transistors are to be tested, a simple test circuit can be assembled as shown in Fig. 9.91.

With the circuit connected, as shown in Fig. 9.91, a 'good' transistor will give readings on the voltmeter of 6 V with the switch open and about 0.5 V when the switch is made. The voltmeter used for the test should have a high internal resistance, about ten times greater than the value of the resistor being tested – in this case 4.7 kΩ – and this is usually indicated on the back of a multi-range meter or in the manufacturers' information supplied with a new meter.

Integrated circuits

ICs were first developed in the 1960s. They are densely populated miniature electronic circuits made up of hundreds and sometimes thousands of microscopically small transistors, resistors, diodes and capacitors, all connected together on a single chip of silicon no bigger than a baby's fingernail. When assembled in a single package, as shown in Fig. 9.92, we call the device an IC.

There are two broad groups of IC: digital ICs and linear ICs. Digital ICs contain simple switching-type circuits used for logic control and calculators, linear ICs incorporate amplifier-type circuits which can respond to audio and radio frequency signals. The most versatile linear IC is the operational amplifier which has applications in electronics, instrumentation and control.

The IC is an electronic revolution. ICs are more reliable, cheaper and smaller than the same circuit made from discrete or separate transistors, and electronically superior. One IC behaves differently than another because of the arrangement of the transistors within the IC.

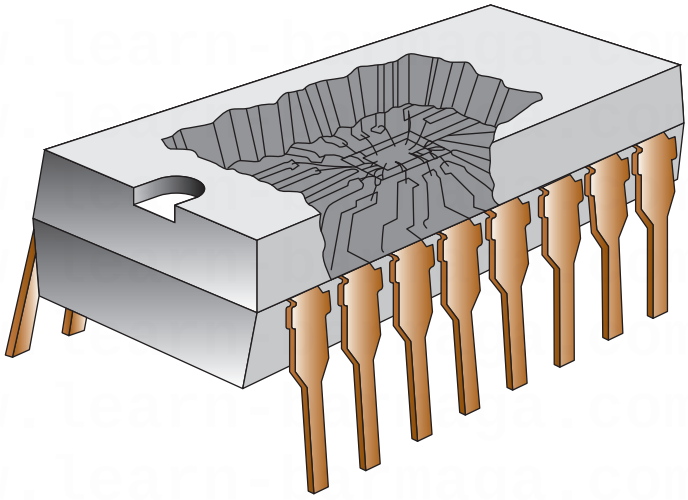

Figure 9.92 Exploded view of an IC.

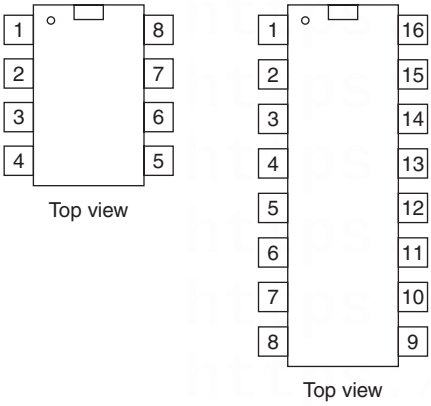

Figure 9.93 IC pin identification.

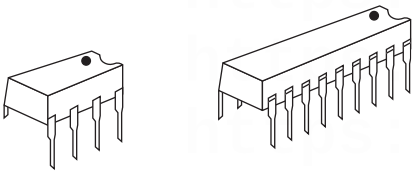

Figure 9.94 DIL packaged ICs.

Manufacturers' data sheets describe the characteristics of the different ICs, which have a reference number stamped on the top.

When building circuits, it is necessary to be able to identify the IC pin connection by number. The number 1 pin of any IC is indicated by a dot pressed into the encapsulation; it is also the pin to the left of the cutout (Fig. 9.93). Since the packaging of ICs has two rows of pins they are called DIL (dual in line) packaged ICs and their appearance is shown in Fig. 9.94.

ICs are sometimes connected into DIL sockets and at other times are soldered directly into the circuit. The testing of ICs is beyond the scope of a practising electrician, and when they are suspected of being faulty an identical or equivalent replacement should be connected into the circuit, ensuring that it is inserted the correct way round, which is indicated by the position of pin number 1 as described above.

The thyristor

The *thyristor* was previously known as a 'silicon controlled rectifier' since it is a rectifier which controls the power to a load. It consists of four pieces of semiconductor material sandwiched together and connected to three terminals, as shown in Fig. 9.95.

The word thyristor is derived from the Greek word *thyra* meaning door, because the thyristor behaves like a door. It can be open or shut, allowing or preventing current flow through the device. The door is opened – we say the thyristor is triggered – to a conducting state by applying a pulse voltage to the gate connection. Once the thyristor is in the conducting state, the gate loses all control over the devices. The only way to bring the thyristor back to a non-conducting state is to reduce the voltage across the anode and cathode to zero or apply reverse voltage across the anode and cathode.

We can understand the operation of a thyristor by considering the circuit shown in Fig. 9.96. This circuit can also be used to test suspected faulty components.

When SWB only is closed the lamp will not light, but when SWA is also closed, the lamp lights to full brilliance. The lamp will remain illuminated even when SWA is opened. This shows that the thyristor is operating correctly. Once a voltage has been applied to the gate the thyristor becomes forward conducting, like a diode, and the gate loses control.

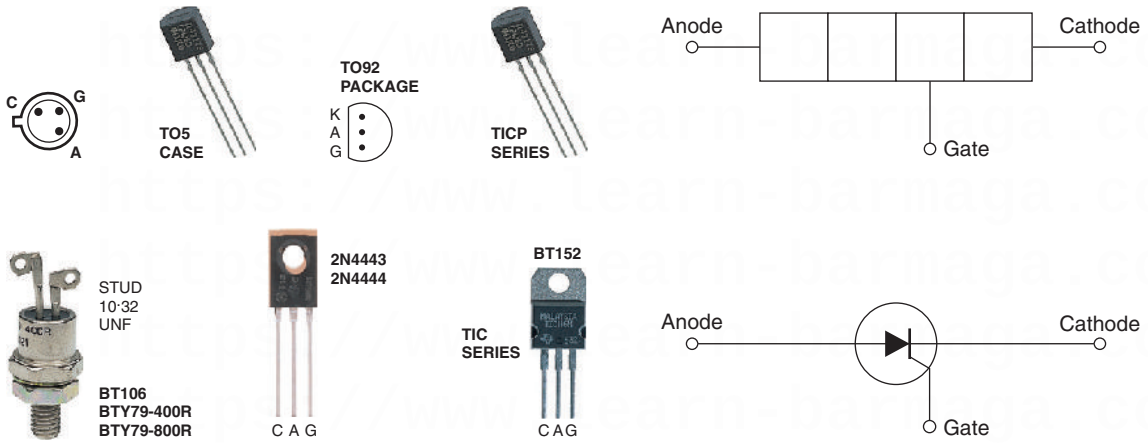

Figure 9.95 Symbol for and structure and appearance of a thyristor.

Table 9.10 Thyristor testing using an ohmmeter

A 'good' thyristor will give the following readings:
Black to cathode and red on gate = low resistance
Red to cathode and black on gate = a higher resistance value
The value of the second reading will depend upon the thyristor, and may vary from only slightly greater to very much greater
Connecting the test instrument leads from cathode to anode will result in a very high resistance reading, whatever polarity is used

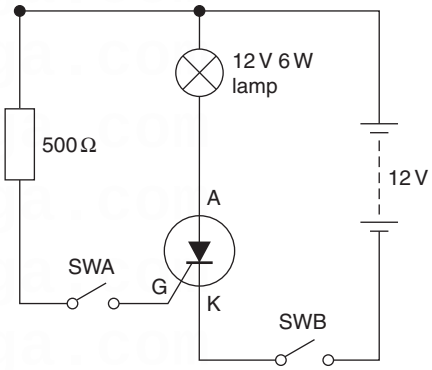

Figure 9.96 Thyristor test circuit.

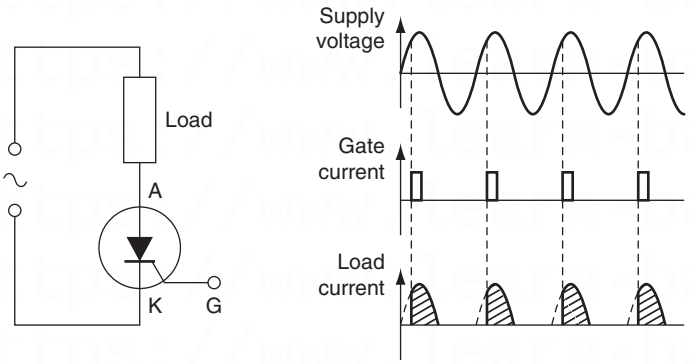

Figure 9.97 Waveforms to show the control effect of a thyristor.

A thyristor may also be tested using an ohmmeter as described in Table 9.10, assuming that the red lead of the ohmmeter is positive.

The thyristor has no moving parts and operates without arcing. It can operate at extremely high speeds, and the currents used to operate the gate are very small. The most common application for the thyristor is to control the power supply to a load, for example, lighting dimmers and motor speed control.

The power available to an a.c. load can be controlled by allowing current to be supplied to the load during only a part of each cycle. This can be achieved by supplying a gate pulse automatically at a chosen point in each cycle, as shown by Fig. 9.97. Power is reduced by triggering the gate later in the cycle.

Figure 9.98 Appearance of a triac.

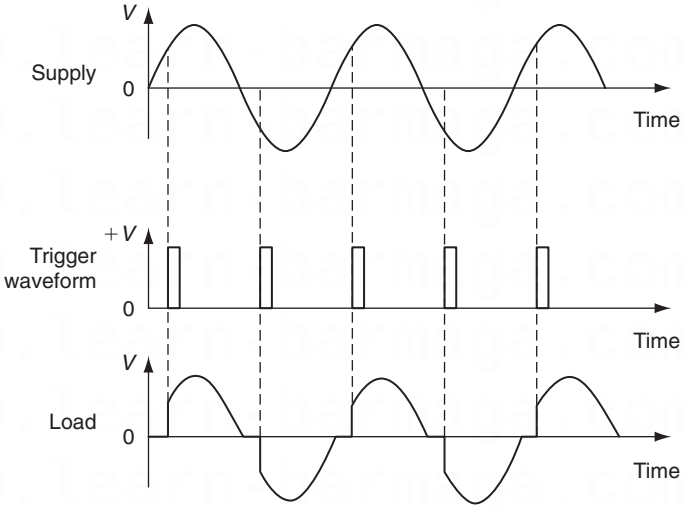

Figure 9.99 Waveforms to show the control effect of a triac.

The thyristor is only a half-wave device (like a diode) allowing control of only half the available power in an a.c. circuit. This is very uneconomical, and a further development of this device has been the triac which is considered next.

The triac

The triac was developed following the practical problems experienced in connecting two thyristors in parallel to obtain full-wave control, and in providing two separate gate pulses to trigger the two devices.

The triac is a single device containing a back-to-back, two-directional thyristor which is triggered on both halves of each cycle of the a.c. supply by the same gate signal. The power available to the load can, therefore, be varied between zero and full load.

Its symbol and general appearance are shown in Fig. 9.98. Power to the load is reduced by triggering the gate later in the cycle, as shown by the waveforms of Fig. 9.99.

The triac is a three-terminal device, just like the thyristor, but the terms anode and cathode have no meaning for a triac. Instead, they are called main terminal one (MT_1) and main terminal two (MT_2). The device is triggered by applying a small pulse to the gate (G). A gate current of 50 mA is sufficient to trigger a triac switching up to 100 A. They are used for many commercial applications where control of a.c. power is required, for example, motor speed control and lamp dimming.

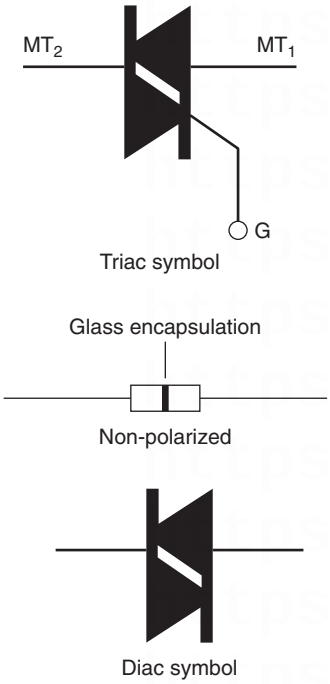

Figure 9.100 Symbol for and appearance of a diac used in triac firing circuits.

The diac

The diac is a two-terminal device containing a two-directional Zener diode. It is used mainly as a trigger device for the thyristor and triac. The symbol is shown in Fig. 9.100.

The device turns on when some predetermined voltage level is reached, say 30 V, and, therefore, it can be used to trigger the gate of a triac or thyristor each time the input waveform reaches this predetermined value. Since the device contains back-to-back Zener diodes it triggers on both the positive and negative half-cycles.

Voltage divider

Earlier in this chapter we considered the distribution of voltage across resistors connected in series. We found that the supply voltage was divided between the series resistors in proportion to the size of the resistor. If two identical resistors were connected in series across a 12 V supply, as shown in Fig. 9.101(a), both common sense and a simple calculation would confirm that 6 V would be measured across the output. In the circuit shown in Fig. 9.101(b), the 1 and 2 kΩ resistors divide the input voltage into three equal parts. One part, 4 V, will appear across the 1 kΩ resistor and two parts, 8 V, will appear across the 2 kΩ resistor. In Fig. 9.101(c) the situation is reversed and, therefore, the voltmeter will read 4 V. The division of the voltage is proportional to the ratio of the two resistors and, therefore, we call this simple circuit a *voltage divider* or *potential divider*. The values of the resistors R_1 and R_2 determine the output voltage as follows:

$$V_{OUT} = V_{IN} \times \frac{R_2}{R_1 + R_2} \text{(V)}$$

For the circuit shown in Fig. 9.101(b)

$$V_{OUT} = 12\text{ V} \times \frac{2\text{ k}\Omega}{1\text{ k}\Omega + 2\text{ k}\Omega} = 8\text{ V}$$

For the circuit shown in Fig. 9.101(c)

$$V_{OUT} = 12\text{ V} \times \frac{1\text{ k}\Omega}{2\text{ k}\Omega + 1\text{ k}\Omega} = 4\text{ V}$$

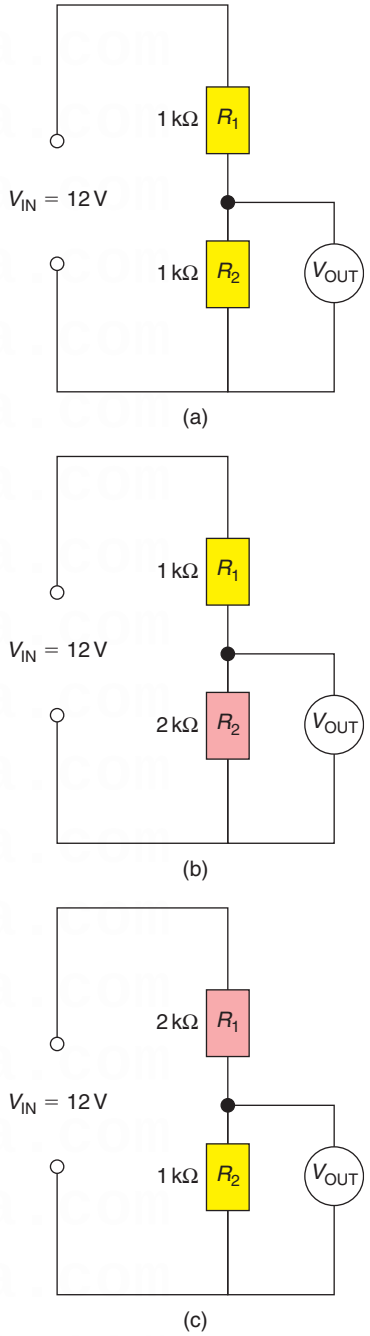

Figure 9.101 Voltage divider circuit.

Example 1

For the circuit shown in Fig. 9.102, calculate the output voltage.

$$V_{OUT} = 6\text{ V} \times \frac{2.2\text{ k}\Omega}{10\text{ k}\Omega + 2.2\text{ k}\Omega} = 1.08\text{ V}$$

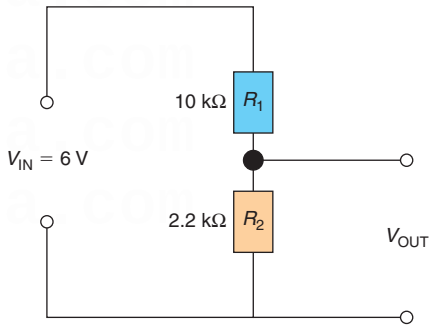

Figure 9.102 Voltage divider circuit for Example 1

Example 2

For the circuit shown in Fig. 9.103(a), calculate the output voltage.

We must first calculate the equivalent resistance of the parallel branch:

$$\frac{1}{R_T} = \frac{1}{R_1} + \frac{1}{R_2}$$

$$\frac{1}{R_T} = \frac{1}{10\text{ k}\Omega} + \frac{1}{10\text{ k}\Omega} = \frac{1+1}{10\text{ k}\Omega} = \frac{2}{10\text{ k}\Omega}$$

$$R_T = \frac{10\text{ k}\Omega}{2} = 5\text{ k}\Omega$$

The circuit may now be considered as shown in Fig. 9.103(b):

$$V_{OUT} = 6\text{ V} \times \frac{10\text{ k}\Omega}{5\text{ k}\Omega + 10\text{ k}\Omega} = 4\text{ V}$$

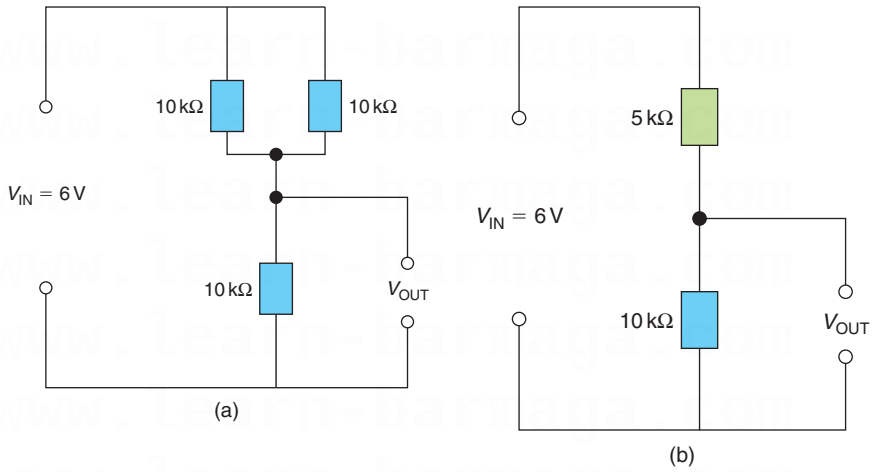

Figure 9.103 (a) Voltage divider circuit for Example 2; (b) equivalent circuit for Example 2.

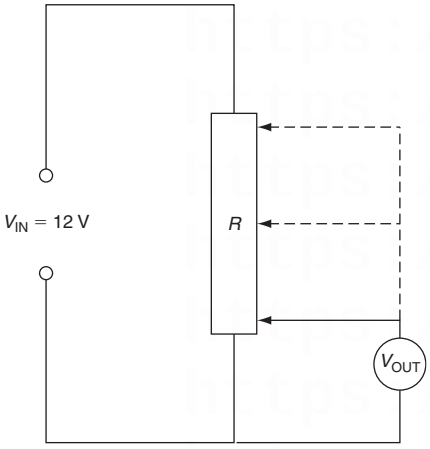

Figure 9.104 Constantly variable voltage divider circuit.

Voltage dividers are used in electronic circuits to produce a reference voltage which is suitable for operating transistors and ICs. The volume control in a radio or the brightness control of a cathode-ray oscilloscope requires a continuously variable voltage divider and this can be achieved by connecting a variable resistor or potentiometer, as shown in Fig. 9.104. With the wiper arm making a connection at the bottom of the resistor, the output would be zero. When connection is made at the centre, the voltage would be 6 V, and at the top of the resistor the voltage would be 12 V. The voltage is continuously variable between 0 and 12 V simply by moving the wiper arm of a suitable variable resistor such as those shown in Fig. 9.68.

When a voltmeter is connected to a voltage divider it 'loads' the circuit, causing the output voltage to fall below the calculated value. To avoid this, the resistance of the voltmeter should be at least ten times as great as the value of the resistor across which it is connected. For example, the voltmeter connected across the voltage divider shown in Fig. 9.101(b) must be greater than 20 kΩ, and across 9.101(c) greater than 10 kΩ. This problem of loading the circuit occurs when taking voltage readings in electronic circuits and therefore a high impedance voltmeter should always be used to avoid instrument errors.

Rectification of a.c.

Definition

Rectification is the conversion of an a.c. supply into a unidirectional or d.c. supply.

When a d.c. supply is required, batteries or a rectified a.c. supply can be provided. Batteries have the advantage of portability, but a battery supply is more expensive than using the a.c. mains supply suitably rectified. **Rectification** is the conversion of an a.c. supply into a unidirectional or d.c. supply. This is one of the many applications for a diode which will conduct in one direction only, that is when the anode is positive with respect to the cathode.

Half-wave rectification

The circuit is connected as shown in Fig. 9.105. During the first half-cycle the anode is positive with respect to the cathode and, therefore, the diode will conduct. When the supply goes negative during the second half-cycle, the anode is negative with respect to the cathode and, therefore, the diode will not allow current to flow. Only the positive half of the waveform will be available at the load and the lamp will light at reduced brightness.

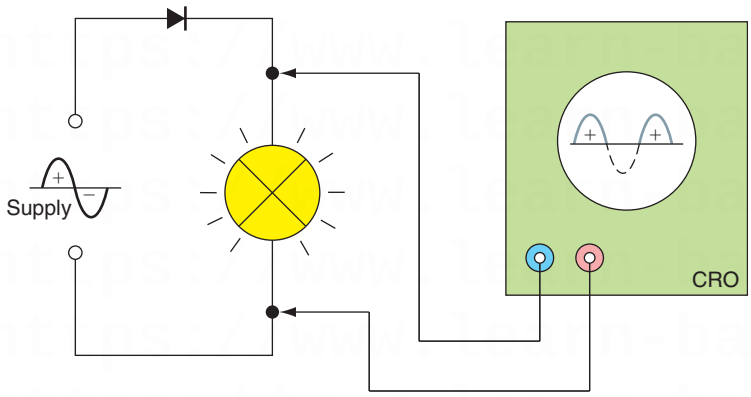

Figure 9.105 Half-wave rectification.

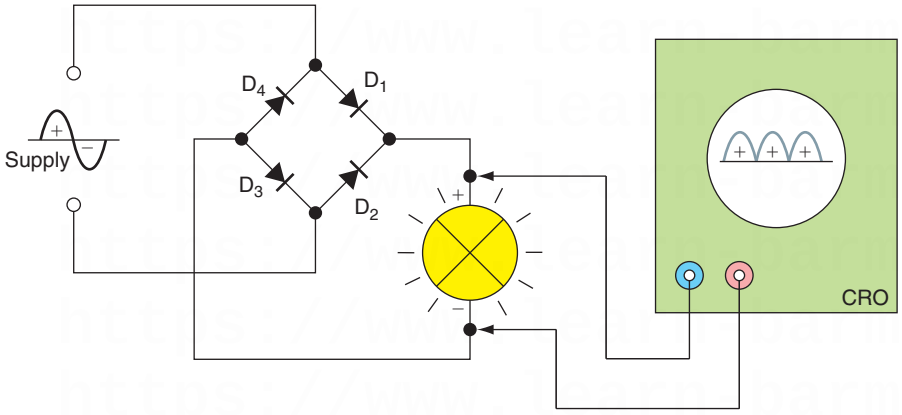

Figure 9.106 Full-wave rectification using a bridge circuit.

Full-wave rectification

Figure 9.106 shows an improved rectifier circuit which makes use of the whole a.c. waveform and is, therefore, known as a full-wave rectifier. When the four diodes are assembled in this diamond-shaped configuration, the circuit is also known as a *bridge rectifier*. During the first half-cycle diodes D_1 and D_3 conduct, and diodes D_2 and D_4 conduct during the second half-cycle. The lamp will light to full brightness.

Full-wave and half-wave rectification can be displayed on the screen of a CRO and will appear as shown in Figs. 9.105 and 9.106.

Smoothing

The circuits of Figs. 9.105 and 9.106 convert an alternating waveform into a waveform which never goes negative, but they cannot be called continuous d.c. because they contain a large alternating component. Such a waveform is too bumpy to be used to supply electronic equipment but may be used for battery charging. To be useful in electronic circuits the output must be smoothed. The simplest way to smooth an output is to connect a large-value capacitor across the output terminals as shown in Fig. 9.107.

When the output from the rectifier is increasing, as shown by the dotted lines of Fig. 9.108, the capacitor charges up. During the second quarter of the cycle, when the output from the rectifier is falling to zero, the capacitor discharges into

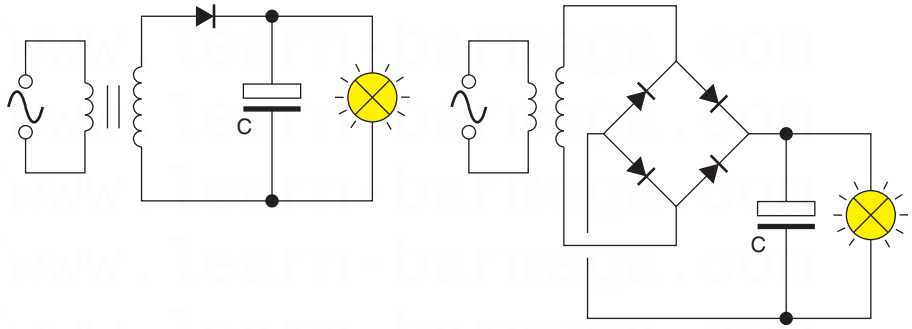

Figure 9.107 Rectified a.c. with smoothing capacitor connected.

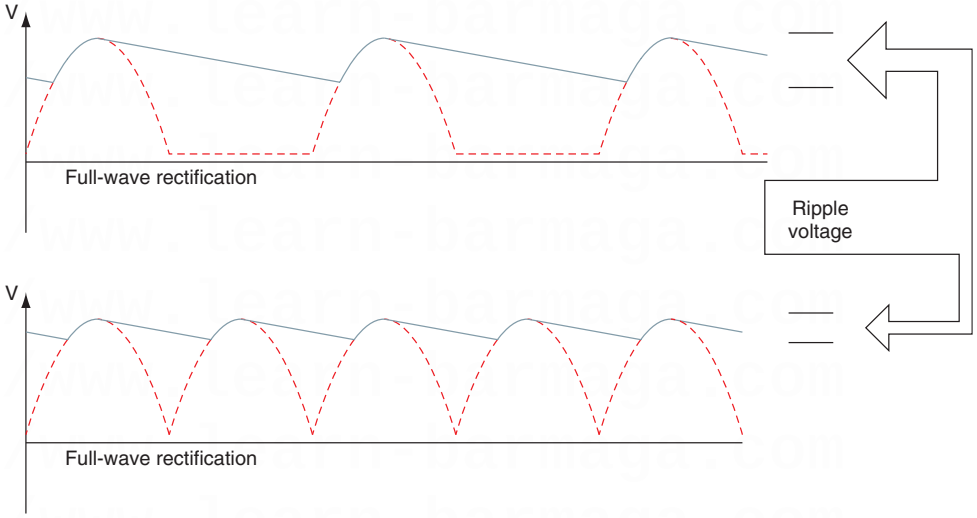

Figure 9.108 Output waveforms with smoothing showing reduced ripple with full wave.

the load. The output voltage falls until the output from the rectifier once again charges the capacitor. The capacitor connected to the full-wave rectifier circuit is charged up twice as often as the capacitor connected to the half-wave circuit and, therefore, the output ripple on the full-wave circuit is smaller, giving better smoothing. Increasing the current drawn from the supply increases the size of the ripple. Increasing the size of the capacitor reduces the amount of ripple.

Try this

Battery Charger

- Do you have a battery charger for your car battery?
- What type of circuit do you think is inside?
- Carefully look inside and identify the components.

Low-pass filter

The ripple voltage of the rectified and smoothed circuit shown in Fig. 9.107 can be further reduced by adding a low-pass filter, as shown in Fig. 9.109. A low-pass filter allows low frequencies to pass while blocking higher frequencies. Direct current has a frequency of zero hertz, while the ripple voltage of a full-wave rectifier has a frequency of 100 Hz. Connecting the low-pass filter will allow

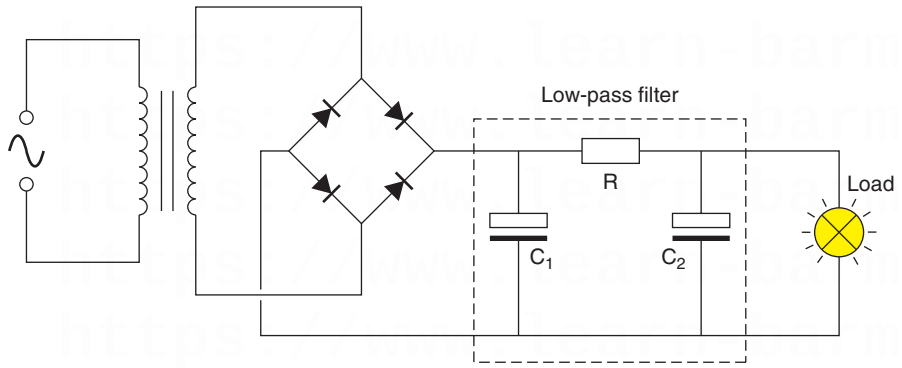

Figure 9.109 Rectified a.c. with low-pass filter connected.

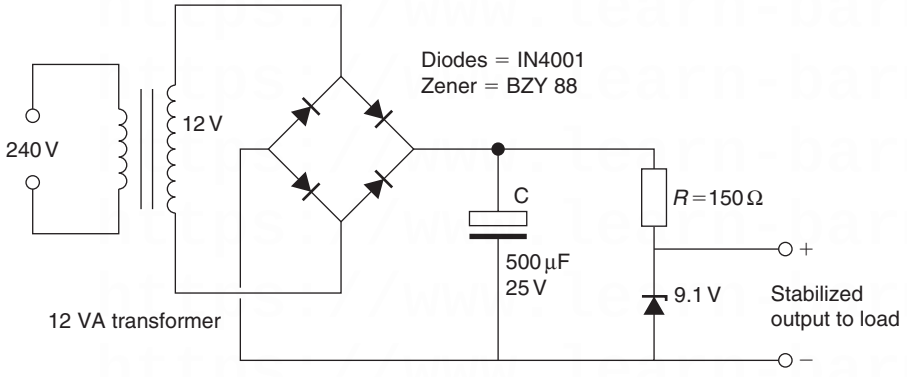

Figure 9.110 Stabilized d.c. supply.

the d.c. to pass while blocking the ripple voltage, resulting in a smoother output voltage.

The low-pass filter shown in Fig. 9.109 does, however, increase the output resistance, which encourages the voltage to fall as the load current increases. This can be reduced if the resistor is replaced by a choke, which has a high-impedance to the ripple voltage but a low resistance, which reduces the output ripple without increasing the output resistance.

Stabilized power supplies

The power supplies required for electronic circuits must be ripple-free, stabilized and have good regulation, that is the voltage must not change in value over the whole load range. A number of stabilizing circuits are available which, when connected across the output of the circuit shown in Fig. 9.107, give a constant or stabilized voltage output. These circuits use the characteristics of the Zener diode which was described by the experiment in Fig. 9.81.

Figure 9.110 shows an a.c. supply which has been rectified, smoothed and stabilized. You could build and test this circuit at college if your lecturers agree.

Electronic systems

So far in this chapter we have looked at the basic electronic components. Let us now look at some electronic systems which are made up of those individual components.

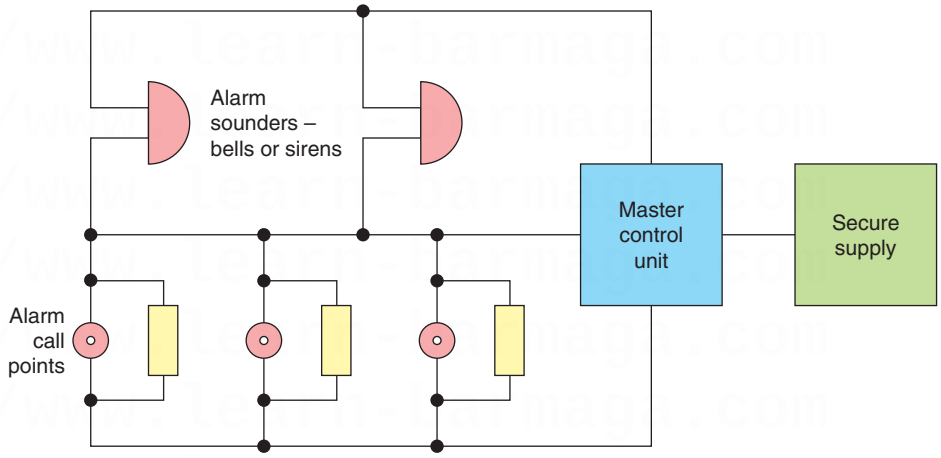

Figure 9.111 A simple normally open fire alarm circuit.

Definition

Fire alarm circuits are wired as either normally open or normally closed. In a *normally open circuit*, the alarm call points are connected in parallel with each other so that when any alarm point is initiated the circuit is completed and the sounder gives a warning of fire.

Fire alarm circuits (BS 5839 and BS EN 54-2: 1998)

Through one or more of the various statutory Acts, all public buildings are required to provide an effective means of giving a warning of fire so that life and property may be protected. An effective system is one which gives a warning of fire while sufficient time remains for the fire to be put out and any occupants to leave the building.

Fire alarm circuits are wired as either normally open or normally closed. In a *normally open circuit*, the alarm call points are connected in parallel with each other so that when any alarm point is initiated the circuit is completed and the sounder gives a warning of fire. The arrangement is shown in Fig. 9.111. It is essential for some parts of the wiring system to continue operating even when attacked by fire. For this reason the master control and sounders should be wired in MI or FP 200 cable. The alarm call points of a normally open system must also be wired in MI or FP 200 cable, unless a monitored system is used. In its simplest form this system requires a high-value resistor to be connected across the call-point contacts, which permits a small current to circulate and operate an indicator, declaring the circuit healthy. With a monitored system, PVC insulated cables may be used to wire the alarm call points.

Definition

In a *normally closed circuit*, the alarm call points are connected in series to normally closed contacts as shown in Fig. 9.112. When the alarm is initiated, or if a break occurs in the wiring, the alarm is activated.

In a **normally closed circuit**, the alarm call points are connected in series to normally closed contacts as shown in Fig. 9.112. When the alarm is initiated, or if a break occurs in the wiring, the alarm is activated. The sounders and master control unit must be wired in MI or FP 200 cable, but the call points may be wired in PVC insulated cable since this circuit will always 'fail safe'.

Definition

Manually operated alarm call points should be provided in all parts of a building where people may be present, and should be located so that no one need walk for more than 30 m from any position within the premises in order to give an alarm.

Alarm call points

Manually operated alarm call points should be provided in all parts of a building where people may be present, and should be located so that no one need walk for more than 30 m from any position within the premises in order to give an alarm. A breakglass manual call point is shown in Fig. 9.113. They should be located on exit routes and, in particular, on the floor landings of staircases and exits to the street. They should be fixed at a height of 1.4 m above the floor at easily accessible, well illuminated and conspicuous positions.

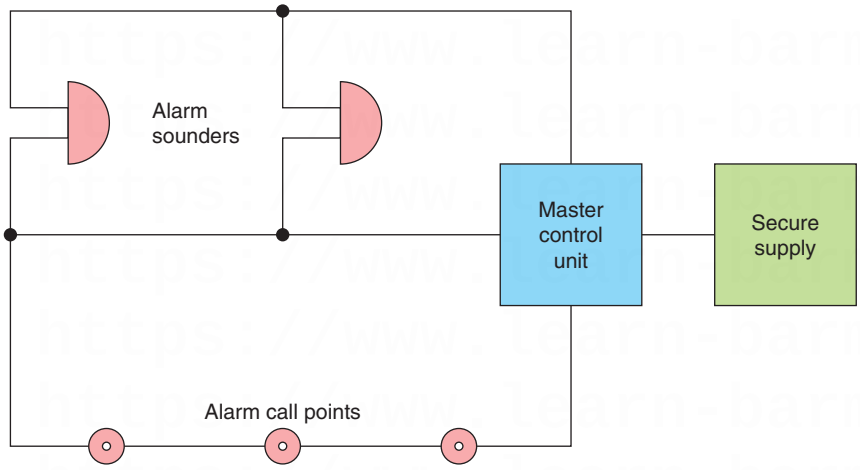

Figure 9.112 A simple normally closed fire alarm circuit.

Figure 9.113 Breakglass manual call point.

Figure 9.114 Typical fire alarm sounders.

Automatic detection of fire is possible with heat and smoke detectors. These are usually installed on the ceilings and at the top of stair-wells of buildings because heat and smoke rise. Smoke detectors tend to give a faster response than heat detectors, but whether manual or automatic call points are used should be determined by their suitability for the particular installation. They should be able to discriminate between a fire and the normal environment in which they are to be installed.

Sounders

The positions and numbers of **sounders** should be such that the alarm can be distinctly heard above the background noise in every part of the premises. The sounders should produce a minimum of 65 dB, or 5 dB above any ambient sound which might persist for more than 30 s. If the sounders are to arouse sleeping persons then the minimum sound level should be increased to 75 dB at the bedhead. Bells, hooters or sirens may be used but in any one installation they must all be of the same type. Examples of sounders are shown in Fig. 9.114. Normal speech is about 5 dB.

Definition

The positions and numbers of *sounders* should be such that the alarm can be distinctly heard above the background noise in every part of the premises.

Fire alarm design considerations

Since all fire alarm installations must comply with the relevant statutory regulations, good practice recommends that contact be made with the local fire prevention officer at the design stage in order to identify any particular local regulations and obtain the necessary certification.

Larger buildings must be divided into zones so that the location of the fire can be quickly identified by the emergency services. The zones can be indicated on an indicator board situated in, for example, a supervisor's office or the main reception area.

In selecting the zones, the following rules must be considered:

1. Each zone should not have a floor area in excess of 2000 m^2.
2. Each zone should be confined to one storey, except where the total floor area of the building does not exceed 300 m^2.
3. Staircases and very small buildings should be treated as one zone.

4 Each zone should be a single fire compartment. This means that the walls, ceilings and floors are capable of containing the smoke and fire.

At least one fire alarm sounder will be required in each zone, but all sounders in the building must operate when the alarm is activated.

The main sounders may be silenced by an authorized person, once the general public have been evacuated from the building, but the current must be diverted to a supervisory buzzer which cannot be silenced until the system has been restored to its normal operational state.

A fire alarm installation may be linked to the local fire brigade's control room by the telecommunication network, if the permission of the fire authority and local telecommunication office is obtained.

The electricity supply to the fire alarm installation must be secure in the most serious conditions. In practice the most reliable supply is the mains supply, backed up by a 'standby' battery supply in case of mains failure. The supply should be exclusive to the fire alarm installation, fed from a separate switch fuse, painted red and labelled, 'Fire Alarm – Do Not Switch Off'. Standby battery supplies should be capable of maintaining the system in full normal operation for at least 24 h and, at the end of that time, be capable of sounding the alarm for at least 30 min.

Fire alarm circuits are Band I circuits and consequently cables forming part of a fire alarm installation must be physically segregated from all Band II circuits unless they are insulated for the highest voltage (IEE Regulations 528.1 and 560.7.1).

Intruder alarms

The installation of security alarm systems in the United Kingdom is already a multi-million-pound business and yet it is also a relatively new industry. As society becomes increasingly aware of crime prevention, it is evident that the market for security systems will expand.

Not all homes are equally at risk, but all homes have something of value to a thief. Properties in cities are at highest risk, followed by homes in towns and villages, and at least risk are homes in rural areas. A nearby motorway junction can, however, greatly increase the risk factor. Flats and maisonettes are the most vulnerable, with other types of property at roughly equal risk. Most intruders are young, fit and foolhardy opportunists. They ideally want to get in and away quickly but, if they can work unseen, they may take a lot of trouble to gain access to a property by, for example, removing the glass from a window.

Most intruders are looking for portable and easily saleable items such as video recorders, television sets, home computers, jewellery, cameras, silverware, money, cheque books or credit cards. The Home Office has stated that only 7% of homes are sufficiently protected against intruders, although 75% of householders believe they are secure. Taking the simplest precautions will reduce the risk, while installing a security system can greatly reduce the risk of a successful burglary.

Definition

Security lighting is the first line of defence in the fight against crime.

Security lighting

Security lighting is the first line of defence in the fight against crime. 'Bad men all hate the light and avoid it, for fear their practices should be shown up' (John 3:20). A recent study carried out by Middlesex University has shown that in two London boroughs the crime figures were reduced by improving the lighting

levels. Police forces agree that homes and public buildings which are externally well illuminated are a much less attractive target for the thief.

Security lighting installed on the outside of the home may be activated by external detectors. These detectors sense the presence of a person outside the protected property and additional lighting is switched on. This will deter most potential intruders while also acting as courtesy lighting for visitors (Fig. 9.115).

Passive infra-red detectors

Passive infra-red (PIR) detector units allow a householder to switch on lighting units automatically whenever the area covered is approached by a moving body whose thermal radiation differs from the background. This type of detector is ideal for driveways or dark areas around the protected property. It also saves energy because the lamps are only switched on when someone approaches the protected area. The major contribution to security lighting comes from the 'unexpected' high-level illumination of an area when an intruder least expects it. This surprise factor often encourages the potential intruder to 'try next door'.

PIR detectors are designed to sense heat changes in the field of view dictated by the lens system. The field of view can be as wide as 180°, as shown by the diagram in Fig. 9.116. Many of the 'better' detectors use a split lens system so that a number of beams have to be broken before the detector switches on the security lighting. This capability overcomes the problem of false alarms, and a typical PIR is shown in Fig. 9.117.

PIR detectors are often used to switch tungsten halogen floodlights because, of all available luminaires, tungsten halogen offers instant high-level illumination. Light fittings must be installed out of reach of an intruder in order to prevent sabotage of the security lighting system.

Definition

PIR detector units allow a householder to switch on lighting units automatically whenever the area covered is approached by a moving body whose thermal radiation differs from the background.

Figure 9.115 Security lighting reduces crime.

Intruder alarm systems

Alarm systems are now increasingly considered to be an essential feature of home security for all types of homes and not just property in high-risk areas. An **intruder alarm system** serves as a deterrent to a potential thief and often reduces home insurance premiums. In the event of a burglary they alert the occupants, neighbours and officials to a possible criminal act and generate fear and uncertainty in the mind of the intruder which encourages a more rapid departure. Intruder alarm systems can be broadly divided into three

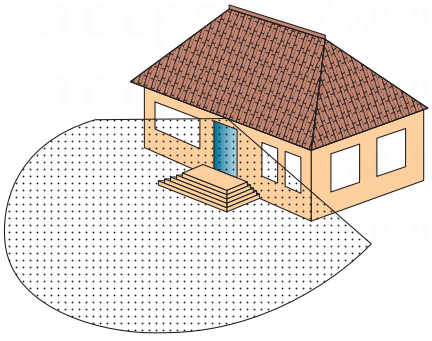

Figure 9.116 PIR detector and field of detection.

Figure 9.117 A typical PIR detector.

categories – those which give perimeter protection, space protection or trap protection. A system can comprise one or a mixture of all three categories.

A **perimeter protection system** places alarm sensors on all external doors and windows so that an intruder can be detected as he or she attempts to gain access to the protected property. This involves fitting proximity switches to all external doors and windows.

A **movement or heat detector** placed in a room will detect the presence of anyone entering or leaving that room. PIR detectors and ultrasonic detectors give space protection. Space protection does have the disadvantage of being triggered by domestic pets but it is simpler and, therefore, cheaper to install. Perimeter protection involves a much more extensive and, therefore, expensive installation, but is easier to live with.

Trap protection places alarm sensors on internal doors and pressure pad switches under carpets on through routes between, for example, the main living area and the master bedroom. If an intruder gains access to one room he cannot move from it without triggering the alarm.

Definitions

An *intruder alarm system* serves as a deterrent to a potential thief and often reduces home insurance premiums.

A *perimeter protection system* places alarm sensors on all external doors and windows so that an intruder can be detected as he or she attempts to gain access to the protected property.

A *movement or heat detector* placed in a room will detect the presence of anyone entering or leaving that room.

Trap protection places alarm sensors on internal doors and pressure pad switches under carpets on through routes between, for example, the main living area and the master bedroom.

Proximity switches

These are designed for the discreet protection of doors and windows. They are made from moulded plastic and are about the size of a chewing-gum packet, as shown in Fig. 9.118. One moulding contains a reed switch, the other a magnet, and when they are placed close together the magnet maintains the contacts of the reed switch in either an open or closed position. Opening the door or window separates the two mouldings and the switch is activated, triggering the alarm.

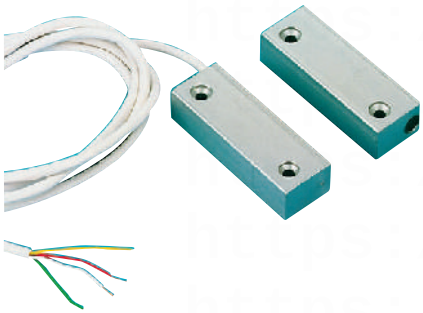

Figure 9.118 Proximity switches for perimeter protection.

PIR detectors

These are activated by a moving body which is warmer than the surroundings. The PIR shown in Fig. 9.119 has a range of 12 m and a detection zone of 110° when mounted between 1.8 and 2 m high.

Intruder alarm sounders

Alarm sounders give an audible warning of a possible criminal act. Bells or sirens enclosed in a waterproof enclosure, such as shown in Fig. 9.120, are suitable.

Figure 9.119 PIR intruder alarm detector.

Figure 9.120 Intruder alarm sounder.

It is usual to connect two sounders on an intruder alarm installation, one inside to make the intruder apprehensive and anxious, hopefully encouraging a rapid departure from the premises, and one outside. The outside sounder should be displayed prominently since the installation of an alarm system is thought to deter the casual intruder and a ringing alarm encourages neighbours and officials to investigate a possible criminal act.

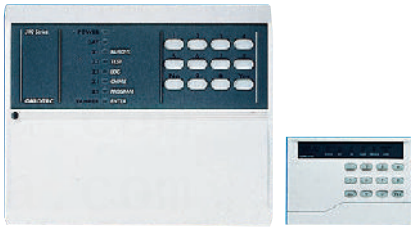

Figure 9.121 Intruder alarm control panel with remote keypad.

Control panel

The control panel, such as that shown in Fig. 9.121, is at the centre of the intruder alarm system. All external sensors and warning devices radiate from the control panel. The system is switched on or off at the control panel using a switch or coded buttons. To avoid triggering the alarm as you enter or leave the premises, there are exit and entry delay times to allow movement between the control panel and the door.

Supply

The supply to the intruder alarm system must be secure and this is usually achieved by an a.c. mains supply and battery back-up. Nickel–cadmium rechargeable cells are usually mounted in the sounder housing box.

Design considerations

It is estimated that there is now a 5% chance of being burgled, but the installation of a security system does deter a potential intruder. Every home in Britain will almost certainly contain electrical goods, money or valuables of value to an intruder. Installing an intruder alarm system tells the potential intruder that you intend to make his job difficult, which in most cases encourages him to look for easier pickings.

The type and extent of the intruder alarm installation, and therefore the cost, will depend upon many factors including the type and position of the building, the contents of the building, the insurance risk involved and the peace of mind offered by an alarm system to the owner or occupier of the building.

The designer must ensure that an intruder cannot sabotage the alarm system by cutting the wires or pulling the alarm box from the wall. Most systems will trigger if the wires are cut and sounders should be mounted in any easy-to-see but difficult-to-reach position.

Intruder alarm circuits are Band I circuits and should, therefore, be segregated from mains supply cables which are designated as Band II circuits or insulated to the highest voltage present if run in a common enclosure with Band II cables (IEE Regulation 528.1).

Closed circuit television

Closed circuit television (CCTV) is now an integral part of many security systems. CCTV systems range from a single monitor with just one camera dedicated to monitoring perhaps a hotel car park, through to systems with many internal and external cameras connected to several locations for monitoring perhaps a shopping precinct.

CCTV cameras are also required to operate in total darkness when floodlighting is impractical. This is possible by using infra-red lighting which renders the scene

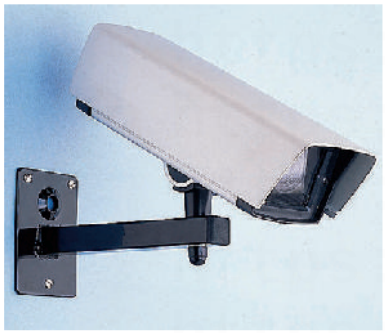

Figure 9.122 CCTV camera.

under observation visible to the camera while to the human eye it appears to be in total darkness.

Cameras may be fixed or movable under remote control, such as those used for motorway traffic monitoring. Typically an external camera would be enclosed in a weatherproof housing such as the one shown in Fig. 9.122. Using remote control, the camera can be panned, tilted or focused and have its viewing screen washed and wiped.

Pictures from several cameras can be multiplexed on to a single co-axial video cable, together with all the signals required for the remote control of the camera.

A permanent record of the CCTV pictures can be stored and replayed by incorporating a video tape recorder into the system, as is the practice in most banks and building societies.

Security cameras should be robustly fixed and cable runs designed so that they cannot be sabotaged by a potential intruder.

Definition

Emergency lighting is not required in private homes because the occupants are familiar with their surroundings, but in public buildings people are in unfamiliar surroundings. In an emergency people do not always act rationally, but well illuminated and easily identified exit routes can help to reduce panic.

Emergency lighting (BS 5266 and BS EN 1838)

Emergency lighting should be planned, installed and maintained to the highest standards of reliability and integrity, so that it will operate satisfactorily when called into action, no matter how infrequently this may be.

Emergency lighting is not required in private homes because the occupants are familiar with their surroundings, but in public buildings people are in unfamiliar surroundings. In an emergency people do not always act rationally, but well illuminated and easily identified exit routes can help to reduce panic.

Emergency lighting is provided for two reasons; to illuminate escape routes, called 'escape' lighting; and to enable a process or activity to continue after a normal lights failure, called 'standby' lighting.

Definition

Emergency lighting is provided for two reasons; to illuminate escape routes, called 'escape' lighting; and to enable a process or activity to continue after a normal lights failure, called *'standby' lighting*.

Escape lighting is usually required by local and national statutory authorities under legislative powers. The escape lighting scheme should be planned so that identifiable features and obstructions are visible in the lower levels of illumination which may prevail during an emergency. Exit routes should be clearly indicated by signs and illuminated to a uniform level, avoiding bright and dark areas.

Standby lighting is required in hospital operating theatres and in industry, where an operation or process once started must continue, even if the mains lighting fails. Standby lighting may also be required for security reasons. The cash points in public buildings may need to be illuminated at all times to discourage acts of theft occurring during a mains lighting failure.

Emergency supplies

Since an emergency occurring in a building may cause the mains supply to fail, the emergency lighting should be supplied from a source which is independent from the main supply. In most premises the alternative power supply would be from batteries, but generators may also be used. Generators can have a large capacity and duration, but a major disadvantage is the delay of time while the generator runs up to speed and takes over the load. In some premises a delay of more than 5 s is considered unacceptable, and in these cases a battery supply is required to supply the load until the generator can take over.

The emergency lighting supply must have an adequate capacity and rating for the specified duration of time (IEE Regulation 313.2). BS 5266 and BS EN 1838

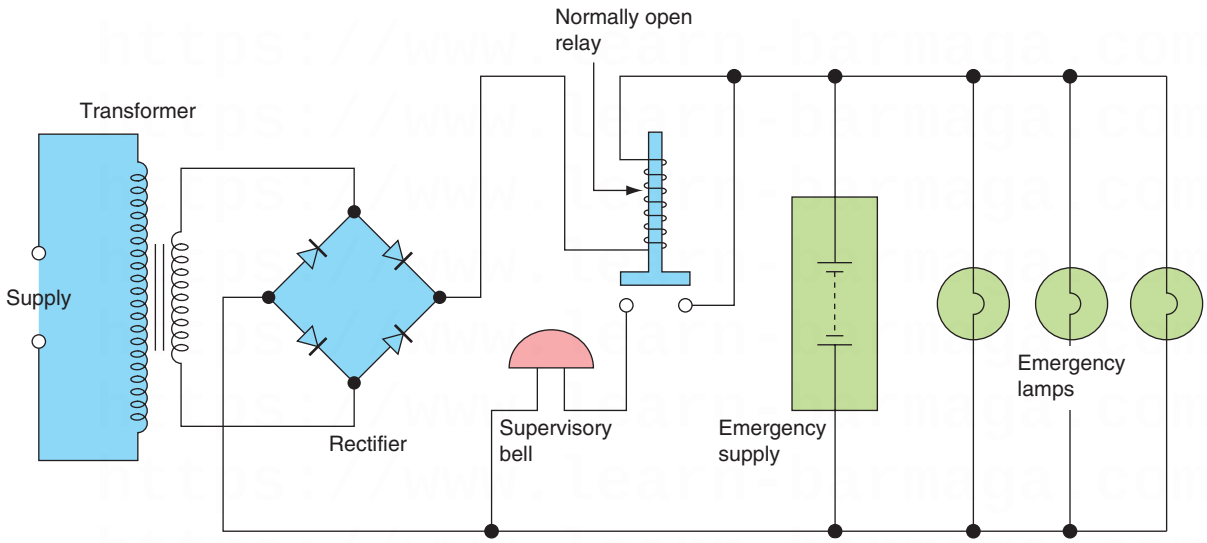

Figure 9.123 Maintained emergency lighting.

states that after a battery is discharged by being called into operation for its specified duration of time, it should be capable of once again operating for the specified duration of time following a recharge period of not longer than 24 h. The duration of time for which the emergency lighting should operate will be specified by a statutory authority but is normally 1–3 h. The British Standard states that escape lighting should operate for a minimum of 1 hour. Standby lighting operation time will depend upon financial considerations and the importance of continuing the process or activity.

There are two possible modes of operation for emergency lighting installations: maintained and non-maintained.

Maintained emergency lighting

In a maintained system the **emergency lamps** are continuously lit using the normal supply when this is available, and change over to an alternative supply when the mains supply fails. The advantage of this system is that the lamps are continuously proven healthy and any failure is immediately obvious. It is a wise precaution to fit a supervisory buzzer in the emergency supply to prevent accidental discharge of the batteries, since it is not otherwise obvious which supply is being used.

Maintained emergency lighting is normally installed in theatres, cinemas, discotheques and places of entertainment where the normal lighting may be dimmed or extinguished while the building is occupied. The emergency supply for this type of installation is often supplied from a central battery, the emergency lamps being wired in parallel from the low-voltage supply as shown in Fig. 9.123. Escape sign lighting units used in commercial facilities should be wired in the maintained mode.

Definition

In a maintained system the *emergency lamps* are continuously lit using the normal supply when this is available, and change over to an alternative supply when the mains supply fails.

Non-maintained emergency lighting

In a **non-maintained system** the emergency lamps are only illuminated if the normal mains supply fails. Failure of the main supply de-energizes a solenoid and a relay connects the emergency lamps to a battery supply, which is maintained in a state of readiness by a trickle charge from the normal mains supply. When the normal supply is restored, the relay solenoid is energized, breaking the relay

Definition

In a *non-maintained system* the emergency lamps are only illuminated if the normal mains supply fails.

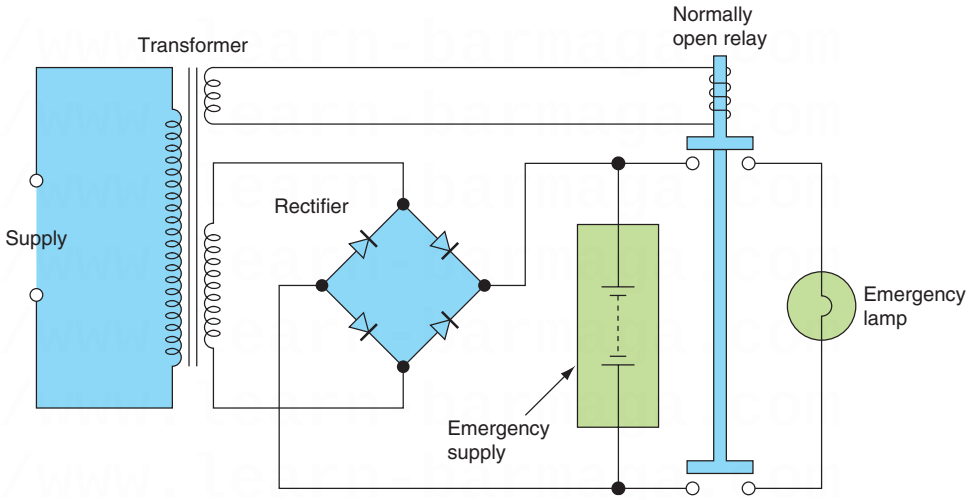

Figure 9.124 Non-maintained emergency lighting.

contacts, which disconnects the emergency lamps, and the charger recharges the battery. Figure 9.124 illustrates this arrangement.

The disadvantage with this type of installation is that broken lamps are not detected until they are called into operation in an emergency, unless regularly maintained. The emergency supply is usually provided by a battery contained within the luminaire, together with the charger and relay, making the unit self-contained. Self-contained units are cheaper and easier to install than a central battery system, but the central battery can have a greater capacity and duration, and permit a range of emergency lighting luminaires to be installed.

Maintenance

The contractor installing the emergency lighting should provide a test facility which is simple to operate and secure against unauthorized interference. The emergency lighting installation must be segregated completely from any other wiring, so that a fault on the main electrical installation cannot damage the emergency lighting installation (IEE Regulation 528.1). Figure 5.36 shows a trunking which provides for segregation of circuits.

The batteries used for the emergency supply should be suitable for this purpose. Motor vehicle batteries are not suitable for emergency lighting applications, except in the starter system of motor-driven generators. The fuel supply to a motor-driven generator should be checked. The battery room of a central battery system must be well ventilated and, in the case of a motor-driven generator, adequately heated to ensure rapid starting in cold weather.

The British Standard recommends that the full load should be carried by the emergency supply for at least 1 h in every 6 months. After testing, the emergency system must be carefully restored to its normal operative state. A record should be kept of each item of equipment and the date of each test by a qualified or responsible person. It may be necessary to produce the record as evidence of satisfactory compliance with statutory legislation to a duly authorized person.

Self-contained units are suitable for small installations of up to about 12 units. The batteries contained within these units should be replaced about every 5 years, or as recommended by the manufacturer and be connected to the a.c. mains supply through a ‘test’ switch.

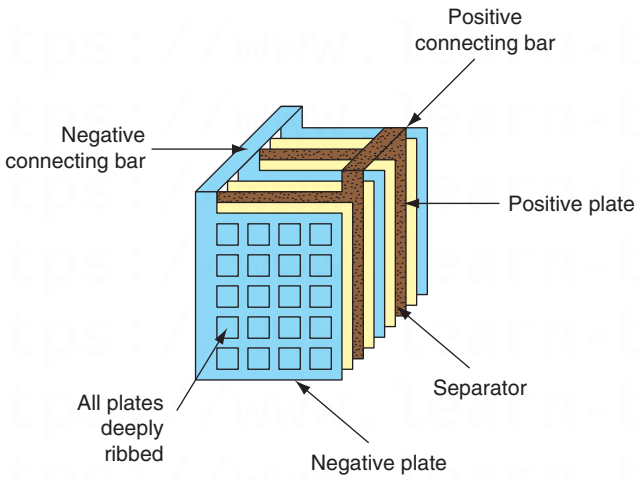

Figure 9.125 The construction of a lead-acid battery.

Primary cells

A **primary cell** cannot be recharged. Once the active chemicals are exhausted, the cell must be discarded.

Primary cells, in the form of Leclanche cells, are used extensively as portable power sources for radios and torches and have an e.m.f. of 1.5 V. Larger voltages are achieved by connecting cells in series. Thus, a 6 V supply can be provided by connecting four cells in series.

Mercury primary cells have an e.m.f. of 1.35 V, and can have a very large capacity in a small physical size. They have a long shelf life and leakproof construction, and are used in watches and hearing aids.

Definition

A *primary cell* cannot be recharged. Once the active chemicals are exhausted, the cell must be discarded.

Secondary cells

A **secondary cell** has the advantage of being rechargeable. If the cell is connected to a suitable electrical supply, electrical energy is stored on the plates of the cell as chemical energy. When the cell is connected to a load, the chemical energy is converted to electrical energy.

A lead-acid cell is a secondary cell. Each cell delivers about 2 V, and when six cells are connected in series a 12 V battery is formed of the type used on motor vehicles. Figure 9.125 shows the construction of a lead-acid battery.

A lead-acid battery is constructed of lead plates which are deeply ribbed to give maximum surface area for a given weight of plate. The plates are assembled in groups, with insulating separators between them. The separators are made of a porous insulating material, such as wood or ebonite, and the whole assembly is immersed in a dilute sulphuric acid solution in a plastic container.

Definition

A *secondary cell* has the advantage of being rechargeable. If the cell is connected to a suitable electrical supply, electrical energy is stored on the plates of the cell as chemical energy.

Battery rating

The capacity of a cell to store charge is a measure of the total quantity of electricity which it can cause to be displaced around a circuit after being fully charged. It is stated in ampere hours, abbreviation Ah, and calculated at the 10 h rate which is the steady load current which would completely discharge the battery in 10 h. Therefore, a 50 Ah battery will provide a steady current of 5 A for 10 h.

Maintenance of lead-acid batteries

- The plates of the battery must always be covered by the dilute sulphuric acid. If the level falls, it must be topped up with distilled water.
- Battery connections must always be tight and should be covered with a thin coat of petroleum jelly.
- The specific gravity or relative density of the battery gives the best indication of its state of charge. A discharged cell will have a specific gravity of 1.150, which will rise to 1.280 when fully charged. The specific gravity of a cell can be tested with a hydrometer.
- To maintain a battery in good condition it should be regularly trickle charged. A rapid charge or discharge encourages the plates to buckle, and may cause permanent damage.
- The room used to charge a battery must be well ventilated because the charged cell gives off hydrogen and oxygen, which are explosive in the correct proportions (IEE Regulation 560.6.3).

Telephone socket outlets

The installation of telecommunications equipment could, for many years, only be undertaken by British Telecom engineers, but today an electrical contractor may now supply and install telecommunications equipment.

On new premises the electrical contractor may install sockets and the associated wiring to the point of intended line entry, but the connection of the incoming line to the installed master socket must only be made by the telephone company's engineer.

On existing installations, additional secondary sockets may be installed to provide an extended plug-in facility as shown in Fig. 9.126. Any number of secondary sockets may be connected in parallel, but the number of telephones which may be connected at any one time is restricted.

Each telephone or extension bell is marked with a ringing equivalence number (REN) on the underside. Each exchange line has a maximum capacity of REN 4 and therefore, the total REN values of all the connected telephones must not exceed four if they are to work correctly.

An extension bell may be connected to the installation by connecting the two bell wires to terminals 3 and 5 of a telephone socket. The extension bell must be of the high impedance type having an REN rating. All equipment connected to a BT exchange line must display the green circle of approval.

The multi-core cable used for wiring extension socket outlets should be of a type intended for use with telephone circuits, which will normally be between 0.4 and 0.68 mm in cross-section. Telephone cable conductors are identified in Table 9.11 and the individual terminals in Table 9.12. The conductors should be connected as shown in Fig. 9.126. Telecommunications cables are Band I circuits and must be segregated from Band II circuits containing mains cables (IEE Regulation 528.1).

Heating and boiler controls

The heating system may be fuelled by gas, electricity, oil or even solar energy, but whatever the fuel the system will undoubtedly be controlled by an electrical/electronic programmer, thermostats and circulating pump.

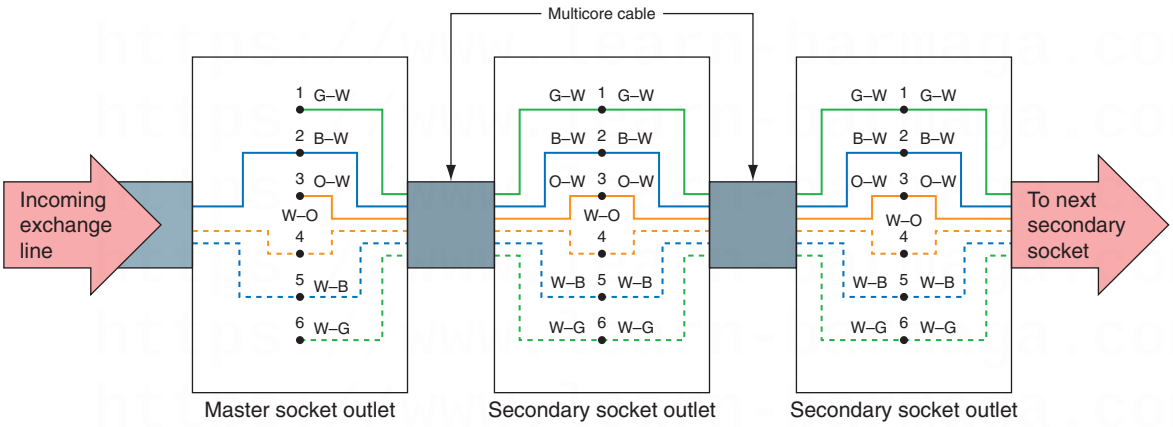

Figure 9.126 Telephone circuit outlet connection diagram.

Table 9.11 Telephone cable identification

Code	Base colour	Stripe
G–W	Green	White
B–W	Blue	White
O–W	Orange	White
W–O	White	Orange
W–B	White	Blue
W–G	White	Green

Table 9.12 Telephone socket terminal identification. terminals 1 and 6 are frequently unused, and therefore four-core cable may normally be installed. Terminal 4, on the incoming exchange line, is only used on a PBX line for earth recall

Socket terminal	Circuit
1	Spare
2	Speech circuit
3	Bell circuit
4	Earth recall
5	Speech circuit
6	Spare

The boiler installation is usually carried out by a mechanical services engineer who may also connect the control system or pass this task on to an electrical contractor.

Honeywell Control Systems offer many different control plans to meet every demand and their 'Y' plan is an easy to install domestic system.

The block diagram shown in Fig. 9.127 gives an outline of the system and indicates the cable runs. The wiring diagram in Fig. 9.128 shows us how

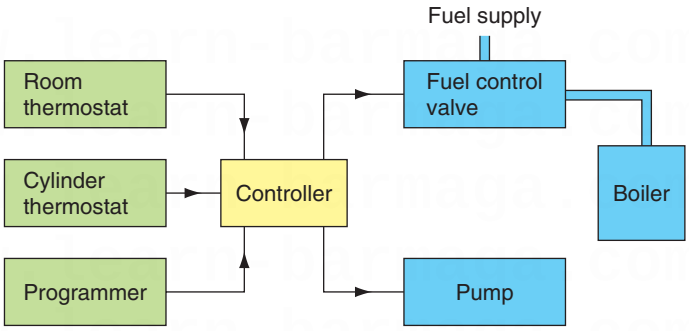

Figure 9.127 Block diagram – space heating control system (Honeywell Y plan).

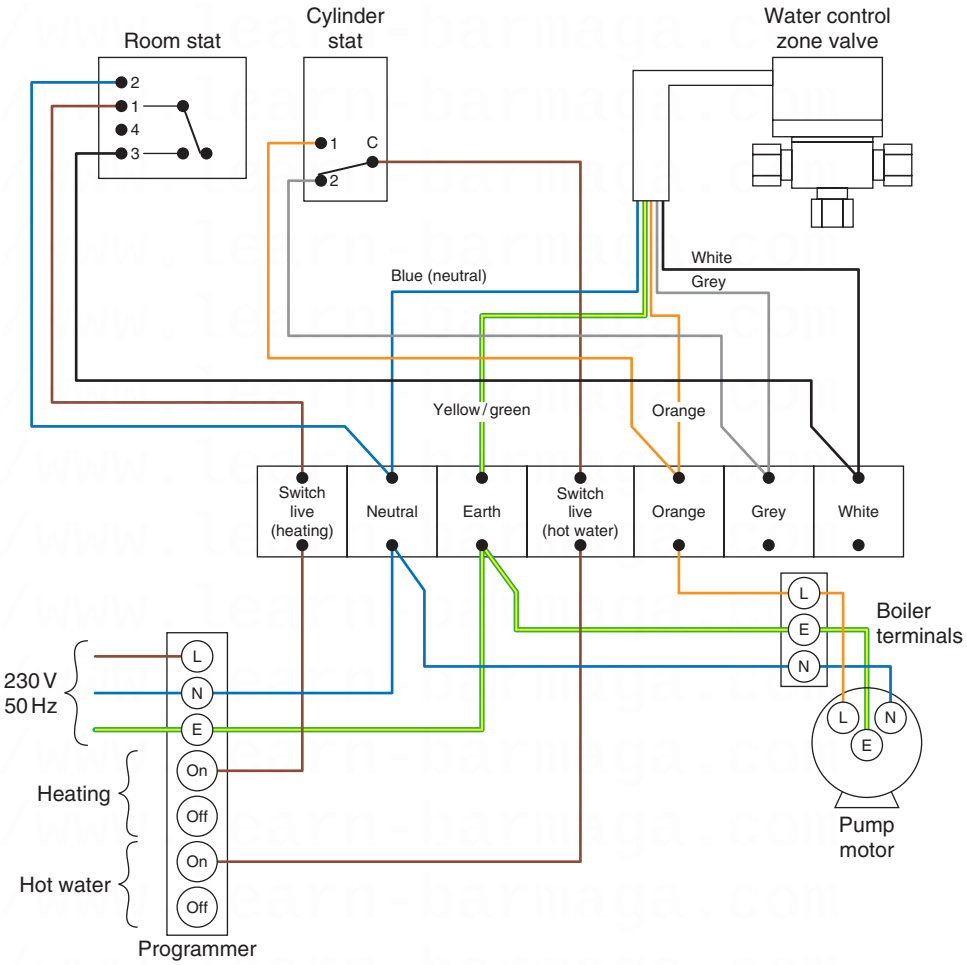

Figure 9.128 Wiring diagram – space heating control system (Honeywell Y plan).

to connect up the system and the circuit diagram in Fig. 9.129 helps us to understand how the system works.

Electrical power on the national grid

Electricity is generated in large modern power stations at 25 kV (25,000 volts). It is then transformed up to 132 kV or 270 kV for transmission to other parts of the

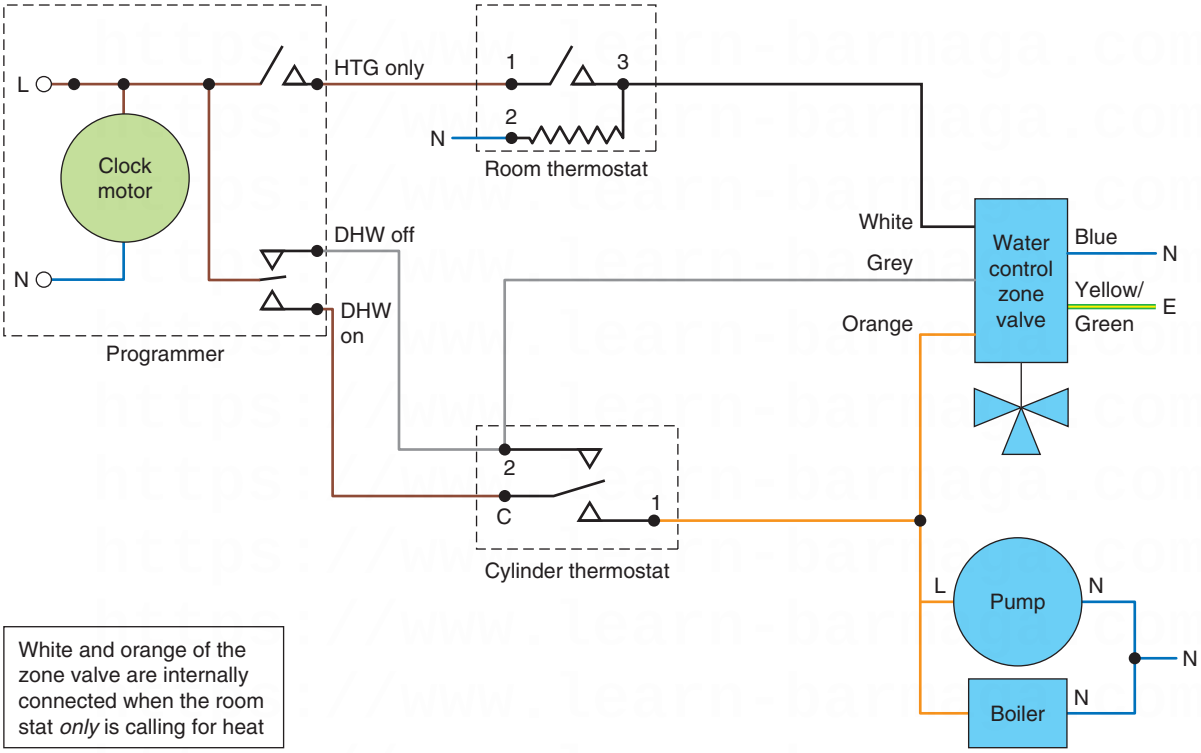

Figure 9.129 Circuit diagram – space heating control system (Honeywell Y plan).

country on the national grid network. This is a network of overhead conductors suspended on transmission towers which link together the power stations and the millions of users of electricity.

Raising the voltage to these very high values reduces the losses on the transmission network. 66 kV or 33 kV are used for secondary transmission lines and then these high voltages are reduced to 11 kV at local sub-stations for distribution to end users such as factories, shops and houses at 400 V and 230 V.

The ease and efficiency of changing the voltage levels is only possible because we generate an a.c. supply. Transformers are then used to change the voltage levels to those which are appropriate: very high voltages for transmission, lower voltages for safe end use. This would not be possible if a d.c. supply was generated.

Figure 9.130 shows a simplified diagram of electricity distribution.

Environmental energy generation

Most of the electrical energy generated in today's power stations is produced from coal and oil, both of which release a lot of Co_2 into the atmosphere, causing climate change. However, following the introduction of the Climate Change Act in 2008 the UK and Europe have agreed to reduce the Co_2 gas emissions from power generation by 20% by the year 2020 and by 60% by 2050. Meeting these targets will mean basing much of the new energy infrastructure around renewable energy, particularly offshore wind power and micro-generation systems.

Key fact

Most of the electrical energy generated in today's power stations is produced from coal and oil, both of which release a lot of Co_2 into the atmosphere, causing climate change.

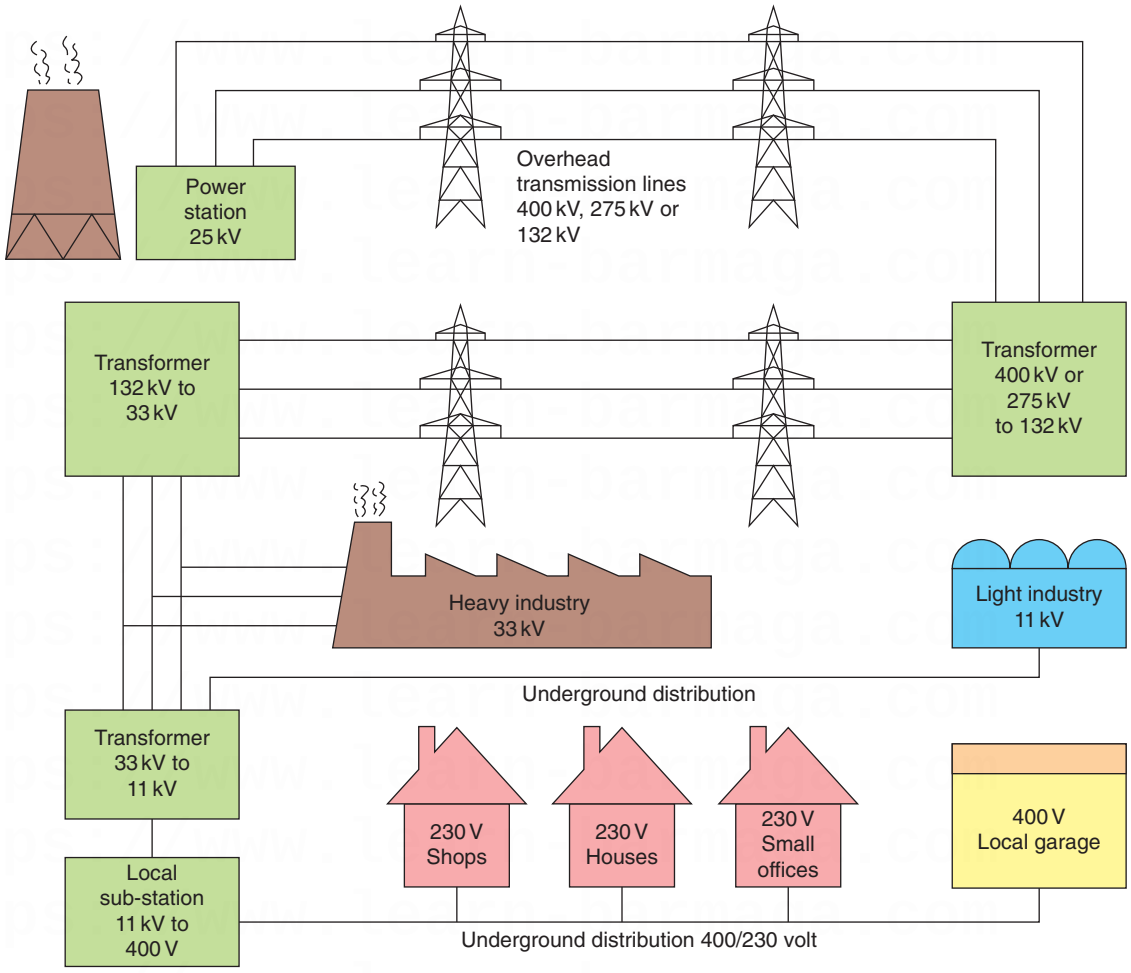

Figure 9.130 Simplified diagram of the distribution of electricity from power station to consumer.

Key fact

The Department of Energy and Climate Change considers wind energy from offshore wind farms to be the most promising of all the renewable energy alternatives in meeting the 2020 and 2050 targets for reducing Co_2 emissions.

Wind energy

The Department of Energy and Climate Change considers wind energy from offshore wind farms to be the most promising of all the renewable energy alternatives in meeting the 2020 and 2050 targets for reducing Co_2 emissions.

Wave energy

The UK is a small island surrounded by water. Surely we could harness some of the energy contained in the tides and waves to generate electrical energy! Well, all the research and development to date is at the prototype stage right now.

Key fact

The use of small hydropower is gaining popularity as an alternative to expensive diesel generation especially in remote off grid communities in Canada and China.

Micro-hydropower generation

The use of small hydro power is gaining popularity as an alternative to expensive diesel generation especially in remote off grid communities in Canada and China. In the UK in the Cumbrian Lake District and the Derbyshire Peak District local communities are using the energy from fast flowing rivers to support their local communities by generating electrical energy from water power.

Solar thermal

Solar thermal hot water heating systems are recognized as a reliable way to use the energy of the sun to heat water. The technology is straightforward: a solar panel is placed on the roof and water is pumped around the panel and a heat exchanger situated in the domestic water cylinder. This system heats the domestic hot water.

Key fact

Solar thermal hot water heating systems are recognized as a reliable way to use the energy of the sun to heat water.

Solar photovoltaic

Photovoltaic cells in panels are placed upon the roof and turn sunlight directly into electricity. They can be 'stand alone' systems operating in remote areas, or operated in parallel with the a.c. mains supply. When connected to a 'smart meter', PV generators can be very profitable in domestic and commercial buildings.

Key fact

Photovoltaic cells in panels are placed upon the roof and turn sunlight directly into electricity.

Ground source heat pumps

Ground source heat pumps extract heat from the ground by circulating a fluid through pipes buried in the ground. A heat exchanger and pump extract heat from these pipes. The heat is then used to provide underfloor radiant heating or water heating.

Combined heat and power

CHP is the simultaneous generation of useable heat and power in a single process. That is, heat is produced as a by-product of the power generation process. The heat is then used to provide radiant heating in nearby buildings.

All of the above environmental technology systems are considered in detail in Chapter 2 of this book. Electrical power supplies using the national grid are considered in detail in Chapter 4.

Key fact

CHP is the simultaneous generation of useable heat and power in a single process.

Check your understanding

When you have completed the questions, check out the answers at the back of the book.

Note: more than one multiple choice answer may be correct.

1 The SI unit of mass is the:
   a. kilogram or kg
   b. pound or lb
   c. metre or m
   d. millimetre or mm.

2 The SI unit of length is the:
   a. kilogram or kg
   b. pound or lb
   c. metre or m
   d. millimetre or mm.

3 The SI unit of time is the:
   a. minute or m
   b. second or s
   c. hour or h
   d. day or d.

4 The SI unit of electric current is the:
   a. ohm or Ω
   b. volt or V
   c. watt or W
   d. ampere or A.

5 The SI unit of resistance is the:
   a. ohm or Ω
   b. volt or V
   c. watt or W
   d. ampere or A.

6 The ampere is a measure of:
   a. potential difference
   b. power
   c. force
   d. electric current.

7 The watt is a measure of:
   a. potential difference
   b. power

c. force
d. electric current.

8 The volt is a measure of:
a. potential difference
b. power
c. force
d. electric current.

9 The Newton is a measure of:
a. potential difference
b. power
c. force
d. electric current.

10 Which of the following may be defined as 'a measure of the force which a body exerts on anything which supports it':
a. acceleration
b. force
c. mass
d. weight.

11 Which of the following may be defined as 'a measure of the amount of material in a substance':
a. acceleration
b. force
c. mass
d. weight.

12 Which of the following may be defined as 'may cause a stationary object to move or bring a moving body to rest':
a. acceleration
b. force
c. mass
d. weight.

13 Which of the following may be defined as 'the force applied times the distance moved in the direction of the force':
a. acceleration
b. work done
c. power
d. velocity.

14 Which of the following may be defined as 'the rate of doing work':
a. acceleration
b. work done
c. power
d. velocity.

15 Which of the following may be defined as 'the speed in a given direction':
a. acceleration
b. work done
c. power
d. velocity.

16 Good conductor materials are:
a. copper
b. PVC
c. brass
d. wood.

17 Good insulator materials are:
a. copper
b. PVC
c. brass
d. wood.

18 A good conductor material:
a. has lots of free electrons
b. has no free electrons
c. may be made of copper
d. may be made of plastic.

19 A good insulator material:
a. has lots of free electrons
b. has no free electrons
c. may be made of copper
d. may be made of plastic.

20 In a series circuit
a. the current is 'common' to all resistors
b. the voltage is 'common' to all resistors
c. $R_T = R_1 + R_2$
d. $\frac{1}{R_T} = \frac{1}{R_1} + \frac{1}{R_2}$.

21 In a parallel circuit
a. the current is 'common' to all resistors
b. the voltage is 'common' to all resistors
c. $R_T = R_1 + R_2$
d. $\frac{1}{R_T} = \frac{1}{R_1} + \frac{1}{R_2}$.

22 The current taken by a 10 Ω resistor when connected to a 230 V supply will be:
a. 2.3 A
b. 10 A
c. 23 A
d. 230 A.

23 The resistance of a kettle element which takes 12 A from a 230 A main supply is:
a. 2.88 Ω
b. 5.00 Ω
c. 12.24 Ω
d. 19.16 Ω.

24 A 12 Ω filament lamp was found to be taking a current of 2 A at full brilliance. The voltage across the lamp under these conditions is:
a. 6 V
b. 12 V
c. 24 V
d. 48 V.

25 Current flowing through a solenoid sets up a magnetic flux. If an iron core is added to the solenoid while the current is maintained at a constant value, the magnetic flux will:
a. remain constant
b. totally collapse
c. decrease in strength
d. increase in strength.

26 Resistors of 6 Ω and 3 Ω are connected in series. The combined resistance value will be:
a. 2.0 Ω
b. 3.6 Ω
c. 6.3 Ω
d. 9.0 Ω.

27 Resistors of 6 Ω and 3 Ω are connected in parallel. The combined resistance value will be:
a. 2.0 Ω
b. 3.6 Ω
c. 6.3 Ω
d. 9.0 Ω.

28 Resistors of 60 Ω, 40 Ω and 20 Ω are connected in series. The total resistance value will be:
a. 10.9 Ω
b. 20.0 Ω
c. 60.6 Ω
d. 120 Ω.

29 Resistors of 20 Ω, 40 Ω and 60 Ω are connected in parallel. The total resistance value will be:
a. 10.9 Ω
b. 20.0 Ω
c. 60.0 Ω
d. 120 Ω.

30 Two identical resistors are connected in series across a 24 V battery. The voltage drop across each resistor will be:
a. 2 V
b. 6 V
c. 12 V
d. 24 V.

31 Two identical resistors are connected in parallel across a 24 V battery. The voltage drop across each resistor will be:
a. 2 V
b. 6 V

c. 12 V
d. 24 V.

32 Electricity is generated in a modern power station at:
a. 230 V
b. 400 V
c. 25 kV
d. 132 kV.

33 Electricity is distributed on the national grid at:
a. 230 V
b. 400 V
c. 25 kV
d. 132 kV.

34 The opposition to current flow in an a.c. resistive circuit is called:
a. resistance
b. inductance
c. reactance
d. impedance.

35 The opposition to current flow in an a.c. capacitive or inductive current is called:
a. resistance
b. inductance
c. reactance
d. impedance.

36 The total opposition to current flow in any a.c. circuit is called:
a. resistance
b. inductance
c. reactance
d. impedance.

37 A straight line having definite length and direction that represents to scale a quantity such as current voltage or impedance is called:
a. a series a.c. circuit
b. capacitive reactance
c. a phasor, as in a phasor diagram
d. the impedance triangle.

38 An a.c. series circuit has an inductive reactance of 4 Ω and a resistance of 3 Ω. The impedance of this circuit will be:
a. 5 Ω
b. 7 Ω
c. 12 Ω
d. 25 Ω.

39 An a.c. series circuit has a capacitive reactance of 12 Ω and a resistance of 9 Ω. The impedance of this current will be:
a. 3 Ω
b. 15 Ω

c. 20 Ω
d. 108 Ω.

40 The inductive reactance of a 100 mH coil when connected to a 50 Hz supply will be:
a. 5 Ω
b. 20 Ω
c. 31.42 Ω
d. 31.42 kΩ.

41 The capacitive reactance of a 100 μF capacitor when connected to a 50 Hz supply will be:
a. 5 Ω
b. 20 Ω
c. 31.8 Ω
d. 31.8 kΩ.

42 A circuit with *bad* power factor causes:
a. fall in the supply voltage
b. an increase in the supply voltage
c. more current to be taken from the supply
d. less current to be taken from the supply.

43 One application for a series d.c. motor is:
a. an electric train
b. a microwave oven
c. a central heating pump
d. an electric drill.

44 One application for an a.c. induction motor is:
a. an electric train
b. a microwave oven
c. a central heating pump
d. an electric drill.

45 One application for a shaded pole a.c. motor is:
a. an electric train
b. a microwave oven
c. a central heating pump
d. an electric drill.

46 A step down transformer has 1000 turns on the primary winding and 500 turns on the secondary winding. If the input voltage was 230 V the output voltage will be:
a. 2 V
b. 115 V
c. 200 V
d. 460 V.

47 An electromagnetic switch operated by a solenoid is one definition of:
a. a transformer
b. an a.c. motor
c. a relay
d. an inductive coil.

48 An electronic circuit resistor is colour coded green, blue, brown, gold. It has a value of:
   a. 56 Ω ± 10%
   b. 65 Ω ± 5%
   c. 560 Ω ± 5%
   d. 650 Ω ± 10%.

49 An electronic device which will allow current to flow through it in one direction only is a:
   a. light dependent resistor (LDR)
   b. light-emitting diode (LED)
   c. semiconductor diode
   d. thermistor.

50 An electronic device whose resistance varies with temperature is a:
   a. light dependent resistor (LDR)
   b. light-emitting diode (LED)
   c. semiconductor diode
   d. thermistor.

51 An electronic device which emits red, green, or yellow light when a current of about 10 mA flows through it is:
   a. light dependent resistor (LDR)
   b. light-emitting diode (LED)
   c. semiconductor diode
   d. thermistor.

52 An electronic device whose resistance changes as a result of light energy falling upon it is a:
   a. light dependent resistor (LDR)
   b. light-emitting diode (LED)
   c. semiconductor diode
   d. thermistor.

53 A street lamp has a luminous intensity of 2000 cd and is suspended 5 m above the ground. The illuminance on the pavement below the lamp will be:
   a. 40 lx
   b. 80 lx
   c. 400 lx
   d. 800 lx.

54 State the units of resistance and current.

55 Describe, with the aid of a simple diagram, how the atoms and electrons behave in a material said to be a good conductor of electricity.

56 Describe, with the aid of a simple diagram, how the atoms and electrons behave in a material said to be a good insulator.

57 List five materials which are used as good conductors in the electrotechnical industry.

58 List five materials which are used as good insulators in the electrotechnical industry.

59 Sketch a simple circuit of two resistors connected in series across a battery and explain how the current flows in this circuit.

60 Sketch a simple circuit of two resistors connected in parallel across a battery and explain how the current flows in this circuit.

61 Sketch a simple circuit to show how a voltmeter and ammeter would be connected into the circuit to measure total voltage and total current.

62 Describe the advantage of using an a.c. supply for the national grid rather than a d.c. supply.

63 Sketch the construction of a simple transformer and label the primary and secondary windings. Why is the metal core of the transformer laminated? How do we cool a big power transformer?

64 List five practical applications for a transformer – for example, a shaver socket.

65 Describe the three effects of an electric current.

66 Sketch the magnetic flux patterns:
   a. around a simple bar magnet
   b. a horseshoe magnet
   c. explain the action and state one application for a solenoid.

67 Briefly describe what we mean by 'a turning force' and give five practical examples of this effect.

68 Briefly define what we mean by a 'simple machine' and give five examples.

69 Briefly describe what we mean by 'the efficiency of a machine'.

70 Sketch the construction of a simple alternator and label all the parts.

71 State how an e.m.f. is induced in an alternator. Sketch and name the shape of the generated e.m.f.

72 Calculate or state the average r.m.s. and maximum value of the domestic a.c. mains supply and show these values on a sketch of the mains supply.

73 Use a sketch with notes of explanation to describe 'good' and 'bad' power factor.

74 State how power factor correction is achieved on:
   a. a fluorescent light fitting
   b. an electric motor.

75 Use a sketch to help you describe the meaning of the words:
   a. inductance
   b. mutual inductance.

76 Use a sketch with notes of explanation to describe how a force is applied to a conductor in a magnetic circuit and how this principle is applied to an electric motor.

77 Use a sketch with notes of explanation to show how a turning force is applied to the rotor and, therefore, the drive shaft of an electric motor.

78 Sketch the magnetic hysteresis loop of a magnetic material suitable for:
   a. a permanent magnet
   b. a transformer.

79 Give three applications for each of the following types of motor:
   a. a d.c. series motors
   b. an a.c. induction motor
   c. an a.c. split-phase motor
   d. an a.c. shaded pole motor.

80 Sketch an electronic circuit which will give full wave rectification of the a.c. mains supply. Assume a 12 V output from a 230 V supply.

Answers to check your understanding

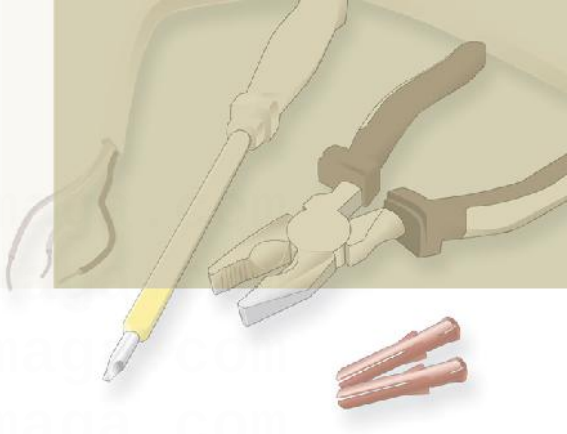

Chapter 1

1. D	2. A	3. A B
4. B C	5. D	6. D
7. D	8. C	9. A B
10. B C D	11. A B	12. C D
13. B C D	14. C D	15. C
16. C	17. A C	18. B D
19. D	20. B	21. C
22. B C D	23. C	24. D
25. C	26. A	27. C
28. C	29. A B D	

30 to 48 Answers in text of Chapter 1.

Chapter 2

1. C	2. A B	3. B C	4. A D	5. B D

6 to 20 Answers in text of Chapter 2.

Chapter 3

1. A C	2. B D	3. B
4. C	5. A	6. D

7 to 20 Answers in text of Chapter 3.

Chapter 4

1. A	2. D	3. C	4. B	5. B
6. B	7. C	8. A	9. D	10. D
11. C	12. C	13. B	14. B	15. C
16. D	17. A C	18. A B	19. B	20. A
21. C	22. B	23. B	24. C	25. B
26. C	27. D	28. D	29. C	30. D
31. C	32. D	33. A	34. B	35. C
36. D	37. C	38. D		

39 to 69 Answers in text of Chapter 4.

Chapter 5

1. C	2. D	3. B	4. C	5. D
6. B	7. A C	8. C	9. A B D	10. C
11. D	12. D	13. C	14. A C	15. B D
16. D	17. B	18. C	19. B C D	20. C
21. D	22. C	23. A	24. C	25. C
26. A B D	27. A B	28. A	29. D	30. C
31. C D	32. B D	33. B	34. C	35. D
36. C D	37. C	38. D	39. B	40. C
41. A D	42. A D	43. D	44. C	45. A
46. B				
47 to 81 Answers in text of Chapter 5.				

Chapter 6

1. C	2. D	3. B	4. C	5. D
6. B	7. C	8. D	9. C D	10. C
11. D				
12 to 21 Answers in text of Chapter 6.				

Chapter 7

1. B	2. C	3. C D	4. B C	5. C
6. D	7. B	8. D	9. B	10. D
11. A D	12. C			
13 to 25 Answers in text of Chapter 7.				

Chapter 8

1. B C D	2. A C	3. B C D	4. D	5. C
6. B D	7. A B	8. C D	9. C	10. A
11. D	12. B C			
13 to 33 Answers in text of Chapter 8.				

Chapter 9				
1. A	2. C	3. B	4. D	5. A
6. D	7. B	8. A	9. C	10. D
11. C	12. B	13. B	14. C	15. D
16. A C	17. B D	18. A C	19. B D	20. A C
21. B D	22. C	23. D	24. C	25. D
26. D	27. A	28. D	29. A	30. C
31. D	32. C	33. D	34. A	35. C
36. D	37. C	38. A	39. B	40. C
41. C	42. C	43. A D	44. C	45. B
46. B	47. C	48. C	49. C	50. D
51. B	52. A	53. B		
54 to 80 Answers in text of Chapter 9.				

This page intentionally left blank

https://www.learn-barmaga.com
https://www.learn-barmaga.com
https://www.learn-barmaga.com

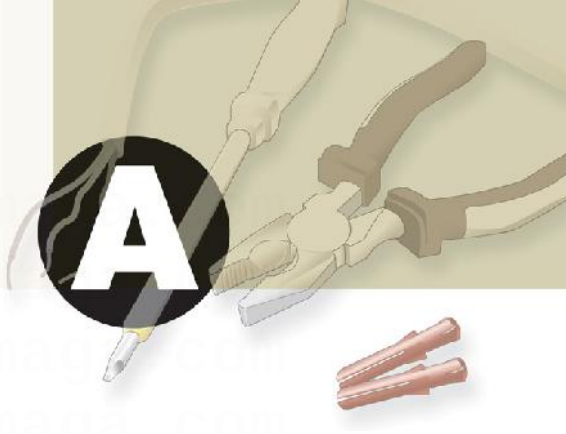

APPENDIX A
Abbreviations, symbols and codes

Abbreviations used in electronics for multiples and submultiples		
T	Tera	10^{12}
G	Giga	10^{9}
M	Mega or Meg	10^{6}
k	Kilo	10^{3}
d	Deci	10^{-1}
c	Centi	10^{-2}
m	Milli	10^{-3}
μ	Micro	10^{-6}
n	Nano	10^{-9}
p	Pico	10^{-12}

Terms and symbols used in electronics	
Term	**Symbol**
Approximately equal to	$\cong$
Proportional to	$\propto$
Infinity	∞
Sum of	$\sum$
Greater than	$>$
Less than	$<$
Much greater than	$\gg$
Much less than	$\ll$
Base of natural logarithms	e
Common logarithms of x	log x
Temperature	θ
Time constant	T
Efficiency	η
Per unit	p.u.

This page intentionally left blank

https://www.learn-barmaga.com
https://www.learn-barmaga.com
https://www.learn-barmaga.com

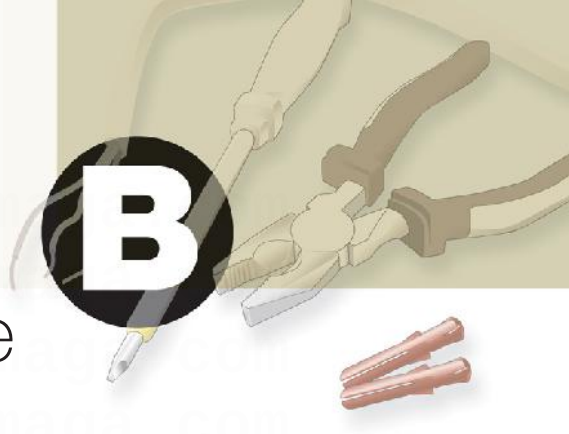

APPENDIX B
Health and Safety Executive (HSE) publications and information

HSE Books, Information Leaflets and Guides may be obtained from
HSE Books, P.O. Box 1999, Sudbury, Suffolk CO10 6FS

HSE Infoline – Telephone No. 0845 3450055 or write to
HSE Information Centre, Broad Lane, Sheffield S3 7HO

HSE home page on the World Wide Web
http:/www.hse.gov.uk

The Health and Safety Poster and other HSE publications are available from
www.hsebooks.com

Environmental Health Department of the Local Authority
Look in the local telephone directory under the name of the authority

HSE AREA OFFICES

01 **South West**
Inter City House, Mitchell Lane, Victoria Street, Bristol BS1 6AN
Telephone: 01171 290681

02 **South**
Priestley House, Priestley Road,
Basingstoke RG24 9NW Telephone: 01256 473181

03 **South East**
East Grinstead House, London Road,
East Grinstead, West Sussex RH19 1RR
Telephone: 01342 326922

05 **London North**
Maritime House, 1 Linton Road, Barking,
Essex IG11 8HF Telephone: 0208 594 5522

06 **London South**
1 Long Lane, London SE1 4PG
Telephone: 0207 407 8911

07 **East Anglia**
39 Baddow Road, Chelmsford, Essex CM2 OHL
Telephone: 0207 407 8911

08 **Northern Home Counties**
14 Cardiff Road, Luton, Beds LU1 1PP
Telephone: 01 582 34121

09 **East Midlands**
Belgrave House, 1 Greyfriars, Northampton NN1 2BS
Telephone: 01604 21233

10 **West Midlands**
McLaren Building, 2 Masshouse Circus, Queensway
Birmingham B4 7NP
Telephone: 0121 200 2299

11 **Wales**
Brunel House, Nizalan Road, Cardiff CF2 1SH
Telephone: 02920 473777

12 **Marches**
The Marches House, Midway, Newcastle-under-Lyme,
Staffs ST5 1DT Telephone: 01782 717181

13 **North Midlands**
Brikbeck House, Trinity Square, Nottingham NG1 4AU
Telephone: 0115 470712

14 **South Yorkshire**
Sovereign House, 40 Silver Street, Sheffield S1 2ES
Telephone: 0114 739081

15 **West and North Yorkshire**
8 St Paul's Street, Leeds LS1 2LE
Telephone: 0113 446191

16 **Greater Manchester**
Quay House, Quay Street, Manchester M3 3JB
Telephone: 0161 831 7111

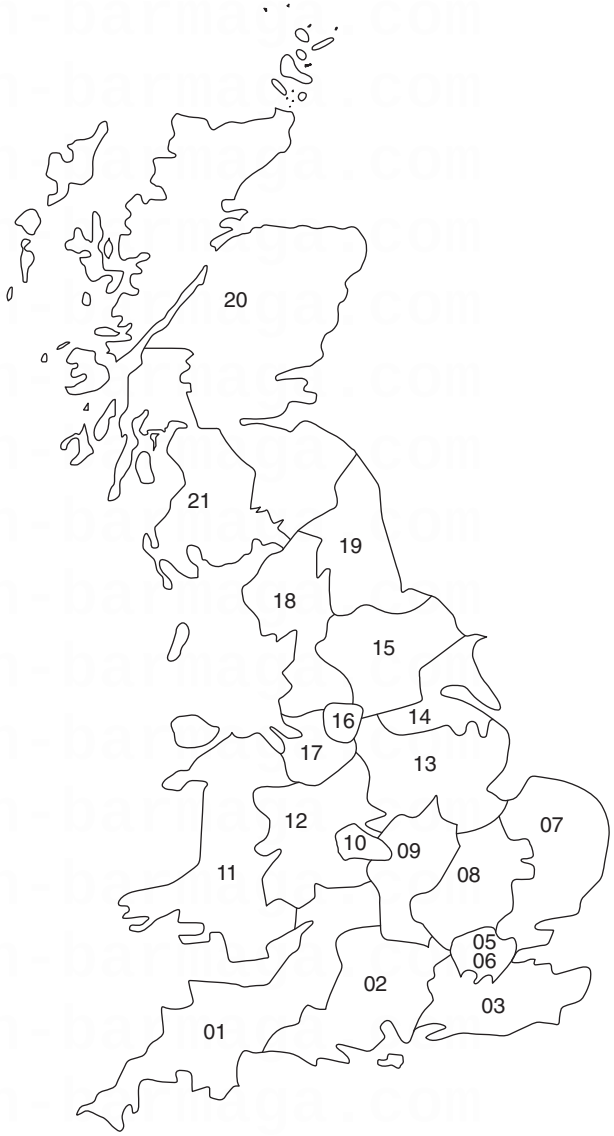

17 **Merseyside**
The Triad, Stanley Road, Bootle L20 3PG
Telephone: 01229 922 7211

18 **North West**
Victoria House, Ormskirk Road, Preston PR1 1HH
Telephone: 01772 59321

19 **North East**
Arden House, Regent Centre, Gosforth, Newcastle upon Tyne NE3 3JN
Telephone: 0191 284 8448

20 **Scotland East**
Belford House, 59 Belford Road, Edinburgh EH4 3UE
Telephone: 0181 225 1313

21 **Scotland West**
314 St Vincent Street, Glasgow G3 8XG
Telephone: 0141 204 2646

Check the Health and Safety Executive website: www.hse.gov.uk for the most up-to-date office addresses as they do change occasionally.

This page intentionally left blank

https://www.learn-barmaga.com
https://www.learn-barmaga.com
https://www.learn-barmaga.com

APPENDIX C
Environmental organizations

The Department of Energy and Climate Change (DECC) for grants

BS 7671:2008 Engineering Recommendations G 83/1 and G 59/1 Published by the Energy Network Association and the Department for Business, Enterprise and Regulatory Reform (BERR) for technical specifications.

Building Regulations England and Wales. The Department of Communities and Local Government at www.communities.gov.uk and for Scotland, The Scottish Building Standards Agency at www.sbsa.gov.uk

The Labour government's 'Feed in Tariff' was introduced by The Climate Secretary Ed Miliband to encourage green electricity producers by paying a subsidy for every kWh of electricity generated by renewable energy fed back to the national grid. The coalition government which came to power in 2010, are committed to supporting this policy.

For information on the Feed in Tariff Scheme see the Office of the Gas and Electricity Markets (OFGEM) website at www.ofgem.gov.uk/fits

Energy Saving Trust at 020 7222 0101 and www.energysavingtrust.org.uk for advice on grants and products.

Micro-generation product advice and their own certification scheme at 01752 823 600 and www.microgeneration.com

The Carbon Trust at www.carbontrust.co.uk/energy offers free advice on loans to businesses who are upgrading to more energy efficient equipment. The size of the loan will depend upon the CO_2 savings.

Planning Guide for Solar, PV and wind turbine installations can be found at www.planningportal.gov.uk/uploads/hhg/houseguide.html

Best practice guide for installing micro-generation systems can be found on the Electrical Safety Council website at www.esc.org.uk/bestpracticeguides.html

Rainwater harvesting guidance and products can be found in abundance by Googleing "rainwater-harvesting".

This page intentionally left blank

https://www.learn-barmaga.com
https://www.learn-barmaga.com
https://www.learn-barmaga.com

Glossary of terms

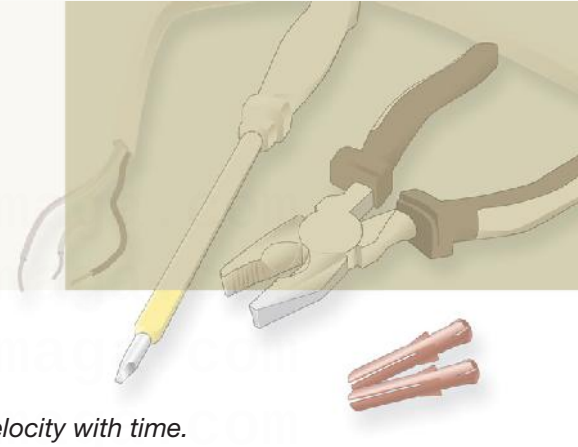

Acceleration *Acceleration is the rate of change in velocity with time.*

$$\text{Acceleration} = \frac{\text{Velocity}}{\text{Time}} = (\text{m/s}^2)$$

Accident *An accident may be defined as an uncontrolled event causing injury or damage to an individual or property.*

Alarm call points *Manually operated alarm call points should be provided in all parts of a building where people may be present, and should be located so that no one need to walk for more than 30 m from any position within the premises in order to give an alarm.*

Alloy *An alloy is a mixture of two or more metals.*

Appointed person *An appointed person is someone who is nominated to take charge when someone is injured or becomes ill, including calling an ambulance if required. The appointed person will also look after the first aid equipment, including re-stocking the first aid box.*

Approved test instruments *The test instruments and test leads used by the electrician for testing an electrical installation must meet all the requirements of the relevant regulations. All testing must, therefore, be carried out using an 'approved' test instrument if the test results are to be valid. The test instrument must also carry a calibration certificate, otherwise the recorded results may be void.*

Basic protection *Basic protection is provided by the insulation of live parts in accordance with Section 416 of the IEE Regulations.*

Bonding conductor *A protective conductor providing equipotential bonding.*

Bonding *The linking together of the exposed or extraneous metal parts of an electrical installation.*

Cable tray *Cable tray is a sheet-steel channel with multiple holes. The most common finish is hot-dipped galvanized but PVC-coated tray is also available. It is used extensively on large industrial and commercial installations for supporting MI and SWA cables which are laid on the cable tray and secured with cable ties through the tray holes.*

Capacitive reactance *Capacitive reactance (X_C) is the opposition to an a.c. current in a capacitive circuit. It causes the current in the circuit to lead ahead of the voltage.*

Centrifugal force *Centrifugal force is the force acting away from the centre, the opposite to centripetal force.*

Centripetal force *Centripetal force is the force acting towards the centre when a mass attached to a string is rotated in a circular path.*

Circuit protective conductor (CPC) *A protective conductor connecting exposed conductive parts of equipment to the main earthing terminal.*

Cohesive or adhesive force *Cohesive or adhesive force is the force required to hold things together.*

Compact fluorescent lamps (CFLs) *CFLs are miniature fluorescent lamps designed to replace ordinary GLS lamps.*

Competent person *A competent person is anyone who has the necessary technical skills, training and expertise to safely carry out the particular activity.*

Compressive force *Compressive force is the force pushing things together.*

Conductor *A conductor is a material, usually a metal, in which the electrons are loosely bound to the central nucleus. These electrons can easily become 'free electrons' which allows heat and electricity to pass easily through the material.*

Conduit *A conduit is a tube, channel or pipe in which insulated conductors are contained.*

Corrosion *The destruction of a metal by chemical action.*

Delivery notes *Delivery note is used to confirm that goods have been delivered by the supplier, who will then send out an invoice requesting payment.*

Duty holder *Duty holder, this phrase recognizes the level of responsibility which electricians are expected to take on as a part of their job in order to control electrical safety in the work environment. Everyone has a duty of care, but not everyone is a duty holder. The person who exercises 'control over the whole systems, equipment and conductors' and is the Electrical Company's representative on-site is a duty holder.*

Earth *The conductive mass of the earth the electrical potential of which is taken as zero.*

Earthing *The act of connecting the exposed conductive parts of an installation to the main protective earthing terminal of the installation.*

Efficiency of any machine *The ratio of the output power to the input power is known as the* efficiency *of the machine. The symbol for efficiency is the Greek letter 'eta' (η). In general,*

$$\eta = \frac{\text{Power output}}{\text{Power input}}$$

Electric current *The drift of electrons within a conductor is known as an electric current, measured in amperes and given the symbol I.*

Electric shock *Electric shock occurs when a person becomes part of the electrical circuit.*

Electrical force *Electrical force is the force created by an electrical field.*

Electrotechnical industry *The electrotechnical industry is made up of a variety of individual companies, all providing a service within their own specialism to a customer, client or user.*

Emergency lighting *Emergency lighting is not required in private homes because the occupants are familiar with their surroundings, but in public buildings people are in unfamiliar surroundings. In an emergency people do not always act rationally, but well-illuminated and easily identified exit routes can help to reduce panic.*

Emergency switching *Emergency switching involves the rapid disconnection of the electrical supply by a single action to remove or prevent danger.*

Escape/standby lighting *Emergency lighting is provided for two reasons; to illuminate escape routes, called 'escape' lighting; and to enable a process or activity to continue after a normal lights failure, called 'standby' lighting.*

Expansion bolts *The most well-known expansion bolt is made by Rawlbolt and consists of a split iron shell held together at one end by a steel ferrule and a spring wire clip at the other end. Tightening the bolt draws up an expanding bolt inside the split iron shell, forcing the iron to expand and grip the masonry. Rawlbolts are for heavy-duty masonry fixings.*

Exposed conductive parts *The metalwork of an electrical appliance or the trunking and conduit of an electrical system which can be touched because they are not normally live, but which may become live under fault conditions.*

Extraneous conductive parts *The structural steelwork of a building and other service pipes such as gas, water, radiators and sinks.*

Faraday's law *Faraday's law which states that* when a conductor cuts or is cut by a magnetic field, an e.m.f. is induced in that conductor*.*

Fault protection *Fault protection is provided by protective equipotential bonding and automatic disconnection of the supply (by a fuse or miniature circuit breaker, MCB) in accordance with IEE Regulations 411.3 to 6.*

Ferrous *A word used to describe all metals in which the main constituent is iron.*

Fire alarm circuits *Fire alarm circuits are wired as either normally open or normally closed. In a* normally open circuit*, the alarm call points are connected in parallel with each other so that when any alarm point is initiated the circuit is completed and the sounder gives a warning of fire. In a* normally closed circuit*, the alarm call points are connected in series to normally closed contacts. When the alarm is initiated, or if a break occurs in the wiring, the alarm is activated.*

Fire *Fire is a chemical reaction which will continue if fuel, oxygen and heat are present.*

First aid *First aid is the initial assistance or treatment given to a casualty for any injury or sudden illness before the arrival of an ambulance, doctor or other medically qualified person.*

First aider *A first aider is someone who has undergone a training course to administer first aid at work and holds a current first aid certificate.*

Flashpoint *The lowest temperature at which sufficient vapour is given off from a flammable substance to form an explosive gas–air mixture is called the flashpoint.*

Flexible conduit *Flexible conduit manufactured to BS 731-1: 1993 is made of interlinked metal spirals often covered with a PVC sleeving.*

Fluorescent lamp *A fluorescent lamp is a linear arc tube, internally coated with a fluorescent powder, containing a low-pressure mercury vapour discharge.*

Force *The presence of a force can only be detected by its effect on a body. A force may cause a stationary object to move or bring a moving body to rest.*

Friction force *Friction force is the force which resists or prevents the movement of two surfaces in contact.*

Functional switching *Functional switching involves the switching on or off, or varying the supply, of electrically operated equipment in normal service.*

Fuse *A fuse is the weakest link in the circuit. Under fault conditions it will melt when an overcurrent flows, protecting the circuit conductors from damage.*

Gravitational force *Gravitational force is the force acting towards the centre of the earth due to the effect of gravity.*

Hazard risk assessment *Employers of more than five people must document the risks at work and the process is known as hazard risk assessment.*

Hazard *A hazard is something with the 'potential' to cause harm, for example, chemicals, electricity or working above ground.*

Hazardous area *An area in which an explosive gas–air mixture is present is called a* hazardous area*, and any electrical apparatus or equipment within a hazardous area must be classified as flameproof to protect the safety of workers.*

Heating, magnetic or chemical *The three effects of an electric current: When an electric current flows in a circuit it can have one or more of the following three effects:* heating, magnetic *or* chemical*.*

Impedance *The total opposition to current flow in an a.c. circuit is called impedance and given the symbol Z.*

Inductive reactance *Inductive reactance (X_L) is the opposition to an a.c. current in an inductive circuit. It causes the current in the circuit to lag behind the applied voltage.*

Inertial force *Inertial force is the force required to get things moving, to change direction or stop.*

Inspection and testing techniques *The testing of an installation implies the use of instruments to obtain readings. However, a test is unlikely to identify a cracked socket outlet, a chipped or loose switch plate, a missing conduit-box lid or saddle, so it is also necessary to make a visual inspection of the installation. All existing installations should be periodically inspected and tested to ensure that they are safe and meet the IEE Regulations (IEE Regulations 610 to 634).*

Instructed person *An instructed person is a person adequately advised or supervised by skilled persons to be able to avoid the dangers which electricity may create.*

Insulator *An insulator is a material, usually a non-metal, in which the electrons are very firmly bound to the nucleus and, therefore, will not allow heat or electricity to pass through it. Good insulating materials are PVC, rubber, glass and wood.*

Intrinsically safe circuit *An intrinsically safe circuit is one in which no spark or thermal effect is capable of causing ignition of a given explosive atmosphere.*

Intruder alarm systems *An intruder alarm system serves as a deterrent to a potential thief and often reduces home insurance premiums.*

Isolation *Isolation is defined as cutting off the electrical supply to a circuit or item of equipment in order to ensure the safety of those*

working on the equipment by making dead those parts which are live in normal service.

Job sheets *A job sheet or job card carries information about a job which needs to be done, usually a small job.*

Lamp *A lamp is a device for converting electrical energy into light energy.*

Lever *A lever is any rigid body which pivots or rotates about a fixed axis or fulcrum. Load force × Distance from fulcrum = Effort force × Distance from fulcrum.*

Levers and turning force *A lever allows a heavy load to be lifted or moved by a small effort.*

Luminaire *A luminaire is equipment which supports an electric lamp and distributes or filters the light created by the lamp.*

Magnesium oxide *The conductors of mineral insulated metal sheathed (MICC) cables are insulated with compressed magnesium oxide.*

Magnetic field *The region of space through which the influence of a magnet can be detected is called the magnetic field of that magnet.*

Magnetic force *Magnetic force is the force created by a magnetic field.*

Magnetic hysteresis *Magnetic hysteresis loops describe the way in which different materials respond to being magnetized.*

Magnetic poles *The places on a magnetic material where the lines of flux are concentrated are called the magnetic poles.*

Maintained emergency lighting *In a maintained system the emergency lamps are continuously lit using the normal supply when this is available, and change over to an alternative supply when the mains supply fails.*

Manual handling *Manual handling is lifting, transporting or supporting loads by hand or by bodily force.*

Mass *Mass is a measure of the amount of material in a substance, such as metal, plastic, wood, brick or tissue, which is collectively known as a body. The mass of a body remains constant and can easily be found by comparing it on a set of balance scales with a set of standard masses. The SI unit of mass is the kilogram (kg).*

Mechanics *Mechanics is the scientific study of 'machines', where a machine is defined as a device which transmits motion or force from one place to another.*

Metallic trunking *Metallic trunking is formed from mild steel sheet, coated with grey or silver enamel paint for internal use or a hot-dipped galvanized coating where damp conditions might be encountered.*

Mini-trunking *Mini-trunking is very small PVC trunking, ideal for surface wiring in domestic and commercial installations such as offices.*

Movement or heat detector *A movement or heat detector placed in a room will detect the presence of anyone entering or leaving that room.*

Mutual inductance *A mutual inductance of 1 henry exists between two coils when a uniformly varying current of 1 ampere per second in one coil produces an e.m.f. of 1 volt in the other coil.*

Non-ferrous *Metals which* do not *contain iron are called non-ferrous. They are non-magnetic and resist rusting. Copper, aluminium, tin, lead, zinc and brass are examples of non-ferrous metals.*

Non-maintained emergency lighting *In a non-maintained system the emergency lamps are only illuminated if the normal mains supply fails.*

Non-statutory regulations and codes of practice *Non-statutory regulations and codes of practice interpret the statutory regulations telling us how we can comply with the law.*

Ohm's law *Ohm's law says that the current passing through a conductor under constant temperature conditions is proportional to the potential difference across the conductor.*

Optical fibre cables *Optical fibre cables are communication cables made from optical-quality plastic, the same material from which spectacle lenses are manufactured. The energy is transferred down the cable as digital pulses of laser light as against current flowing down a copper conductor in electrical installation terms.*

Ordinary person *An ordinary person is a person who is neither a skilled person nor an instructed person.*

Overload current *An overload current can be defined as a current which exceeds the rated value in an otherwise healthy circuit.*

Passive infra-red (PIR) detectors *PIR detector units allow a householder to switch on lighting units automatically whenever the area covered is approached by a moving body whose thermal radiation differs from the background.*

People *People may be described as an ordinary person, a skilled person, an instructed person or a competent person.*

Perimeter protection system *A perimeter protection system places alarm sensors on all external doors and windows so that an intruder can be detected as he or she attempts to gain access to the protected property.*

Person *A person can be described as ordinary, competent, instructed or skilled depending upon that person's skill or ability.*

Personal protective equipment (PPE) *PPE is defined as all equipment designed to be worn, or held, to protect against a risk to health and safety.*

Phasor *A phasor is a straight line, having definite length and direction, which represents to scale the magnitude and direction of a quantity such as a current, voltage or impedance.*

Plastic plugs *A plastic plug is made of a hollow plastic tube split up to half its length to allow for expansion. Each size of plastic plug is colour-coded to match a wood screw size.*

Polyvinylchloride (PVC) *PVC used for cable insulation is a thermoplastic polymer.*

Potential difference *The potential difference (p.d.) is the change in energy levels measured across the load terminals. This is also called the volt drop or terminal voltage, since e.m.f. and p.d. are both measured in volts.*

Power factor *Power factor (p.f.) is defined as the cosine of the phase angle between the current and voltage.*

Power *Power is the rate of doing work.*

$$\text{Power} = \frac{\text{Work done}}{\text{Time taken}} \text{ (W)}$$

Pressure or stress *Pressure or stress is a measure of the force per unit area.*

$$\text{Pressure or stress} = \frac{\text{Force}}{\text{Area}} \ (\text{N/m}^2)$$

Primary cell *A primary cell cannot be recharged. Once the active chemicals are exhausted, the cell must be discarded.*

Protective equipotential bonding *This is equipotential bonding for the purpose of safety.*

PVC/SWA cable installations *Steel wire armoured PVC insulated cables are now extensively used on industrial installations and often laid on cable tray.*

Reasonably practicable or absolute *If the requirement of the regulation is absolute, then that regulation must be met regardless of cost or any other consideration. If the regulation is to be met 'so far as is reasonably practicable', then risks, cost, time, trouble and difficulty can be considered.*

Relay *A relay is an electromagnetic switch operated by a solenoid.*

Resistance *In any circuit, resistance is defined as opposition to current flow.*

Resistivity *The resistivity (symbol ρ – the Greek letter 'rho') of a material is defined as the resistance of a sample of unit length and unit cross-section.*

Risk assessments *Risk assessments need to be* suitable *and* sufficient*, not perfect.*

Risk *A risk is the 'likelihood' of harm actually being done.*

Rubber *Rubber is a tough elastic substance made from the sap of tropical plants.*

Safety first – isolation *We must ensure the disconnection and separation of electrical equipment from every source of supply and that this disconnection and separation is secure.*

Secondary cells *A secondary cell has the advantage of being rechargeable. If the cell is connected to a suitable electrical supply, electrical energy is stored on the plates of the cell as chemical energy.*

Secure supplies *A UPS (uninterruptible power supply) is essentially a battery supply electronically modified to provide a clean and secure a.c. supply. The UPS is plugged into the mains supply and the computer systems are plugged into the UPS.*

Security lighting *Security lighting is the first line of defence in the fight against crime.*

Shearing force *Shearing force is the force which moves one face of a material over another.*

Shock protection *Protection from electric shock is provided by basic protection and fault protection.*

Short circuit *A short circuit is an overcurrent resulting from a fault of negligible impedance connected between conductors.*

SI units *SI units are based upon a small number of fundamental units from which all other units may be derived.*

Silicon rubber *Introducing organic compounds into synthetic rubber produces a good insulating material such as FP200 cables.*

Simple machines *A machine is an assembly of parts, some fixed, others movable, by which motion and force are transmitted. With the aid of a*

machine we are able to magnify the effort exerted at the input and lift or move large loads at the output.

Single PVC insulated conductors *Single PVC insulated conductors are usually drawn into the installed conduit to complete the installation.*

Skilled person *A skilled person is a person with technical knowledge or sufficient experience to be able to avoid the dangers which electricity may create.*

Skirting trunking *Skirting trunking is a trunking manufactured from PVC or steel in the shape of a skirting board which is frequently used in commercial buildings such as hospitals, laboratories and offices.*

Socket outlets *Socket outlets provide an easy and convenient method of connecting portable electrical appliances to a source of supply.*

Sounders *The positions and numbers of sounders should be such that the alarm can be distinctly heard above the background noise in every part of the premises.*

Space factor *The ratio of the space occupied by all the cables in a conduit or trunking to the whole space enclosed by the conduit or trunking is known as the* space factor.

Speed *Speed is concerned with distance travelled and time taken.*

Spring toggle bolts *A spring toggle bolt provides one method of fixing to hollow partition walls which are usually faced with plasterboard and a plaster skimming.*

Static electricity *Static electricity is a voltage charge which builds up to many thousands of volts between two surfaces when they rub together.*

Statutory regulation *Statutory regulations have been passed by Parliament and have, therefore, become laws.*

Step down transformers *Step down transformers are used to reduce the output voltage, often for safety reasons.*

Step up transformers *Step up transformers are used to increase the output voltage. The electricity generated in a power station is stepped up for distribution on the national grid network.*

Switching for mechanical maintenance *The switching for mechanical maintenance requirements are similar to those for isolation except that the control switch must be capable of switching the full load current of the circuit or piece of equipment.*

Synthetic rubber *Synthetic rubber is manufactured, as opposed to being produced naturally.*

Tensile force *Tensile force is the force pulling things apart.*

Thermoplastic polymers *These may be repeatedly warmed and cooled without appreciable changes occurring in the properties of the material.*

Thermosetting polymers *Once heated and formed, products made from thermosetting polymers are fixed rigidly. Plug tops, socket outlets and switch plates are made from this material.*

Time sheets *A time sheet is a standard form completed by each employee to inform the employer of the actual time spent working on a particular contract or site.*

Transformer *A transformer is an electrical machine which is used to change the value of an alternating voltage.*

Trap protection *Trap protection places alarm sensors on internal doors and pressure pad switches under carpets on through routes between, for example, the main living area and the master bedroom.*

Trunking *A trunking is an enclosure provided for the protection of cables which is normally square or rectangular in cross-section, having one removable side. Trunking may be thought of as a more accessible conduit system.*

Velocity *In everyday conversation we often use the word velocity to mean the same as speed, and indeed the units are the same. However, for scientific purposes this is not acceptable since velocity is also concerned with direction.*

Visual inspection *The installation must be visually inspected before testing begins. The aim of the visual inspection is to confirm that all equipment and accessories are undamaged and comply with the relevant British and European Standards, and also that the installation has been securely and correctly erected.*

Weight *Weight is a measure of the force which a body exerts on anything which supports it. Normally it exerts this force because it is being attracted towards the earth by the force of gravity.*

Work done *Work done is dependent upon the force applied times the distance moved in the direction of the force. Work done = Force × Distance moved in the direction of the force (J). The SI unit of work done is the newton metre or joule (symbol J).*

This page intentionally left blank

https://www.learn-barmaga.com
https://www.learn-barmaga.com
https://www.learn-barmaga.com

Index